FRAMELESS SERVO MOTORS
SERIES NK, K, SKW, HKW

Parker

WARNING — USER RESPONSIBILITY

FAILURE OR IMPROPER SELECTION OR IMPROPER USE OF THE PRODUCTS DESCRIBED HEREIN OR RELATED ITEMS CAN CAUSE DEATH, PERSONAL INJURY AND PROPERTY DAMAGE.

- This document and other information from Parker-Hannifin Corporation, its subsidiaries and authorized distributors provide product or system options for further investigation by users having technical expertise.
- The user, through its own analysis and testing, is solely responsible for making the final selection of the system and components and assuring that all performance, endurance, maintenance, safety and warning requirements of the application are met. The user must analyze all aspects of the application, follow applicable industry standards, and follow the information concerning the product in the current product catalog and in any other materials provided from Parker or its subsidiaries or authorized distributors.
- To the extent that Parker or its subsidiaries or authorized distributors provide component or system options based upon data or specifications provided by the user, the user is responsible for determining that such data and specifications are suitable and sufficient for all applications and reasonably foreseeable uses of the components or systems.

Table of Contents

Series Overview 4
NK Series
Description 5
Technical Data 6
Associated Drives 8
Dimensions 9
Order Code 9
K Series
Description 11
Technical Data 12
Associated Drives 13
Dimensions 14
Order Code 14
SKW Series
Description 15
Technical Data 16
Associated Drives 17
Dimensions 17
Order Code 18
HKW Series
Description 19
Technical Data 20
Associated Drives 22
Dimensions 23

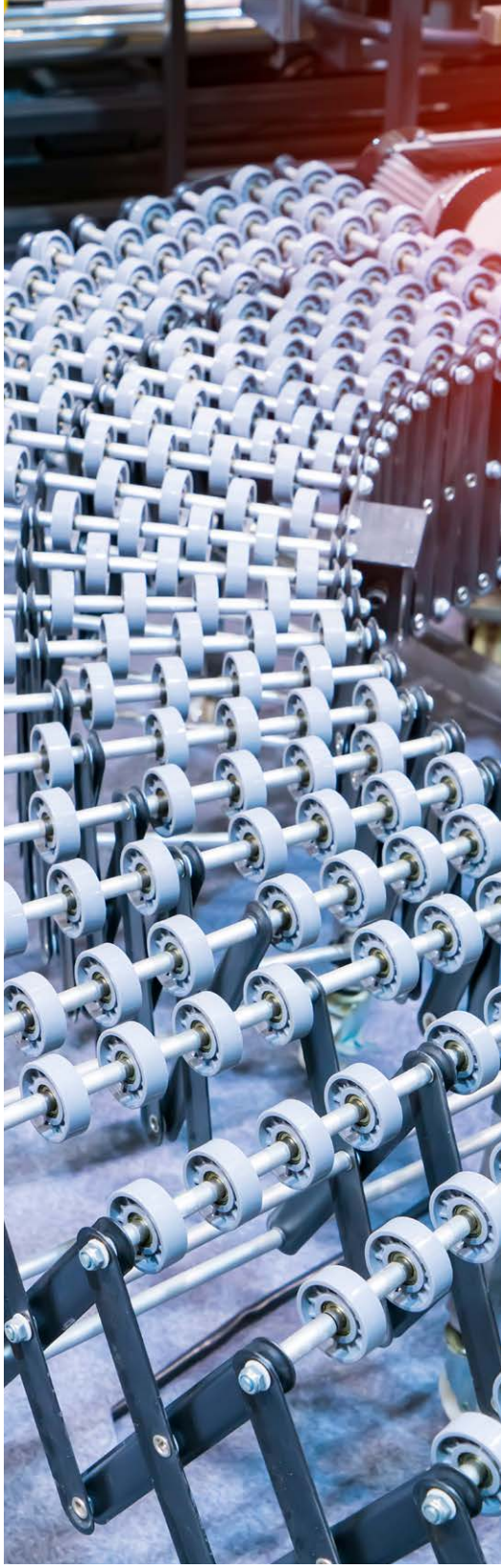

If you have questions about the products contained in this catalog, or their applications, please contact:
Parker Hannifin EMEA Sàrl European Headquarters
parker.com/msge

Overview

Frameless servomotor is an innovative and comprehensive approach enabling the complete integration of the permanent magnets AC motor in a simplified mechanical system. This approach ensures that the size constraints of the machine are utilized to maximum effect. This delivers a more accurate, reliable and robust solution than traditional construction methods.
Different ranges of products are available to meet the design needs of many different mechanical systems in a host of different applications. Other more bespoke adaptations can be developed upon request.

Advantages

- Global cost reduction
- Increased reliability
- Compact footprint of the machine
- High stiffness and robustness of the system
- Direct drive for more accurate and dynamic motion
- Simple machine design
- Reduced weigth of the system
- Reduced maintenance
- Integration assistance

Applications

- Machine tools
- Medical
- Marine & Submarine
- Rotating Table
- Special Machine
- Handling & Robotics
- Mixer
- Winch
- Compressor

Overview

Series	NK		K	SKW	HKW
Web	www.parker.com/eme/nk		www.parker.com/eme/k	www.parker.com/eme/skw	www.parker.com/eme/hkw
Cooling	Natural Cooling	Water Cooling	Natural Cooling	Water cooling	Water Cooling
Power [kW]	0.43 to 7.5	3.8 to 34	0.06 to 2	0.2 to 7.5	2.3 to 276
Torque [Nm]	2 to 41	3.1 to 90	0 .07 to 23	4 to 36	4.5 to 1840
Max Speed [min^{-1}]	5700	15000	10000	12000	50000
Diameter [mm]	62/80/111/143		32/44/64/89/ 178	73/82/91/96	85/108/155/195 /242/310
Power Supply	24 - 48 VAC please contact us 230 - 400 VAC		12 - 24 - 48 - 96 VDC; 240 VAC only for size K178	400 VAC	400 VAC
Main Characteristics/ Performances	• Low cogging • Compact in diameter • Embedded magnets • Oil proof on request		• Low voltage • Compact in Length • Glued magnets • Integrated Hall Effect sensor as an option • Large hollow shaft	• Medium speed • Glued magnets • Winding potted in epoxy resin • Large hollow shaft • Oil proof • For original equipment manufacturer	• High speed • High power • Constant power running (Field weakening mode) • Embedded magnets • Winding potted in epoxy resin • Medium hollow shaft • Oil proof on request

FRAMELESS SERVO MOTOR – NK SERIES

Description

NK Series Servo motors are an innovative direct drive solution designed for industrial applications. NK Series brushless servomotors combine exceptionally precise and quality motion, high dynamic performance with a compact footprint, allowing complete integration into a mechanical system.
NK motors are suite to applications where constant speed is needed due to their low cogging characteristic. Support with customisation and integration are possible on request.

Advantages

- Low cogging solution
- Compact diameter
- Oil-proof on request
- Global cost reduction
- Increased reliability and reduced maintenance
- High dynamic performance and power density: increased productivity and reduced size when compared to induction motors
- Simple, light and compact machine design
- No coupling systems needed
- Greater stiffness and robustness of the system
- Low noise level
- Integration assistance

Application

- Medical
- Machine Tools
- Submarine
- Packaging Machinery
- Pump
- Compressor
- Winch
- Special Machine
- Electric Cylinder

Technical Characteristics Overview

Cooling		Natural cooling	Water cooling
Power	[kW]	0.43...7.5	3.8...34
Torque	[Nm]	2...41	3.1...90
Max Speed	[min^{-1}]	5700	15000
Number of poles		10	10
Diameter	[mm]	62/80/111/143	
Power supply*	[VAC]	24/48/230/400	24/48/230/400

* for 24 - 48 Vac please contact us.

Torque/Speed Curve

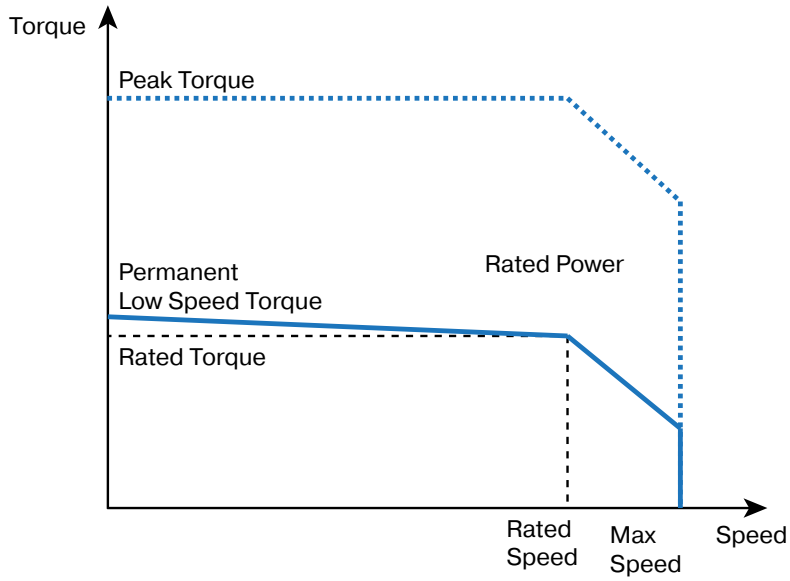

Technical Data

Motor	Rated Power Pn	Rated Torque Mn	Rated Current In	Low speed torque Mo	Low Speed Current Io	Peak Torque M peak	Peak Current I peak	Max. Speed N max	Frequency at max speed	Moment of Inertia J
	[kW]	[Nm]	[Arms]	[Nm]	[Arms]	[Nm]	[Arms]	[min^{-1}]	[Hz]	[kgmm^2]
230VAC power supply - single or three-phased										
NK310E_P	0.43	1.8	1.27	2	1.4	6.6	5.6	2300	192	79
NK310E_K	0.69	1.65	2.06	2	2.4	6.6	9.7	4000	333	79
NK420E_P	0.85	3.53	2.41	4	2.7	13.4	10.9	2300	192	290
NK420E_J	1.31	3.14	3.74	4	4.7	13.4	18.9	4000	333	290
NK430E_J	1.57	4.68	4.53	5,5	5.2	18.7	21.0	3200	267	426
NK430E_F	1.80	4.29	5.28	5,5	6.6	18.7	26.6	4000	333	426
NK620E_R	1.71	7.42	4.99	8	5.3	26.6	21.2	2200	183	980
NK620E_J	2.55	6.08	7.82	8	9.9	26.6	39.5	4000	333	980
NK630E_R	1.63	10.7	4.75	12	5.3	39.9	21.0	1450	121	1470
NK630E_K	2.70	9.21	7.8	12	9.9	39.9	39.4	2800	233	1470
NK630E_G	3.48	8.31	10.1	12	13.9	39.9	55.7	4000	333	1470
NK820E_L	4.99	13.2	14.8	16	17.6	49.9	69.2	3600	300	3200
NK840E_J	5.27	22.9	15.7	28	18.9	91.8	74.8	2200	183	6200
NK860E_F	6.53	32.8	21.8	41	27.0	136.0	107.6	1900	158	9200
NK860E_D	7.48	27.5	22.5	41	33.0	136.0	131.6	2600	217	9200

Technical Data

Motor	Rated Power Pn	Rated Torque Mn	Rated Current In	Low speed torque Mo	Low speed Current Io	Peak Torque M peak	Peak Current I peak	Max. Speed N max	Frequency at max speed	Moment of Inertia J
	[kW]	[Nm]	[Arms]	[Nm]	[Arms]	[Nm]	[Arms]	[min^{-1}]	[Hz]	[$kgmm^2$]
400VAC power supply - three-phased										
NK310E_P	0.689	1.65	1.2	2	1.4	6.6	5.6	4000	333	79
NK420E_V	0.753	3.6	1.2	4	1.4	13.4	5.5	2000	167	290
NK420E_P	1.31	3.14	2.2	4	2.7	13.4	10.9	4000	333	290
NK430E_V	0.563	5.38	1.4	5.5	1.4	18.7	5.6	1000	83	426
NK430E_P	1.5	4.77	2.5	5.5	2.8	18.7	11.3	3000	250	426
NK430E_L	1.8	4.29	3.0	5.5	3.8	18.7	15.1	4000	333	426
NK620E_V	1.57	7.52	2.7	8	2.8	26.6	11.3	2000	167	980
NK620E_R	2.52	6.17	4.3	8	5.3	26.6	21.2	3900	325	980
NK620E_J	2.45	4.1	5.6	8	9.9	26.6	39.5	5700	475	980
NK630E_V	1.53	10.8	2.4	12	2.6	39.9	10.5	1350	113	1470
NK630E_R	2.64	9.34	4.2	12	5.3	39.9	21.0	2700	225	1470
NK630E_N	3.18	7.6	5.3	12	7.9	39.9	31.7	4000	333	1470
NK820E_X	2.93	14.7	4.8	16	5.2	49.9	20.3	1900	158	3200
NK820E_R	5.29	12.9	9.1	16	11.0	49.9	43.2	3900	325	3200
NK840E_Q	5.09	23.2	8.5	28	10.1	91.8	39.9	2100	175	6200
NK840E_K	6.8	18.6	11.5	28	16.8	91.8	66.5	3500	292	6200
NK860E_J	7.48	27.5	12.7	41	18.5	136.0	74.0	2600	217	9200
400 VAC power supply - three-phased - water cooled										
NK310W_F	3.8	2.5	7.4	3.1	8.9	5.89	18.0	15000	1250	79
NK420W_D	4.9	4.64	12.6	6.1	16.3	12.6	36.4	12000	1000	290
NK430W_D	7.4	7.26	14.1	9.6	18.3	18.9	38.9	10000	833	420
NK620W_C	7.7	10.7	20.7	15	29	23.5	48.0	10000	833	980
NK630W_D	11.8	17.8	31.2	23	40.1	38.7	72.8	8000	667	1470
NK820W_G	12.6	19	35.2	24	44.1	37.9	75.0	8000	667	3200
NK840W_D	26.4	42.7	52.7	53	65.3	75.8	100.0	6500	542	6200
NK860W_D	34.8	83.2	64.6	90	70.2	140	123.2	4000	333	9200

Associated Drives

Motor	Compax3	PSD1	SLVD-N	AC890	AC30
230 VAC power supply - single or three-phased					
NK310E_P..	C3S025V2..	PSD1SW1200	SLVD2N	890SD-231300B...	-
NK310E_K..	C3S025V2..	PSD1SW1200	SLVD2N	890SD-231550B...	-
NK420E_P..	C3S063V2..	PSD1SW1300	SLVD5N	890SD-231550B...	-
NK420E_J..	C3S063V2..	-	SLVD5N	890SD-231700B...	-
NK430E_J..	C3S063V2..	PSD1SW1300	SLVD7N	890SD-231700B...	-
NK430E_F..	C3S100V2..	-	SLVD7N	890SD-232165B...	-
NK620E_R..	C3S063V2..	PSD1SW1300	SLVD7N	890SD-231700B...	-
NK620E_J..	C3S100V2..	-	SLVD10N	890SD-232165B...	-
NK630E_R..	C3S063V2..	-	SLVD7N	890SD-231700B...	-
NK630E_K..	C3S100V2..	-	SLVD10N	890SD-232165B...	-
NK630E_G..	C3S150V2..	-	SLVD15N	890SD-232240C...	-
NK820E_L..	-	-	-	890SD-232240C...	-
NK840E_J..	-	-	-	890SD-232240C...	-
NK860E_F..	-	-	-	890SD-232300C...	-
NK860E_D..	-	-	-	-	-
400 VAC power supply - three-phased					
NK310E_P..	C3S015V4..	PSD1MW1300	-	890SD-531450B...	31V4-D0004-B...
NK420E_V..	C3S015V4..	PSD1MW1300	-	890SD-531450B...	31V4-D0004-B...
NK420E_P..	C3S038V4..	PSD1MW1300	-	890SD-531450B...	31V4-D0004-B...
NK430E_V..	C3S015V4..	PSD1MW1300	-	890SD-531450B...	31V4-D0004-B...
NK430E_P..	C3S038V4..	PSD1MW1300	-	890SD-531450B...	31V4-D0004-B...
NK430E_L..	C3S038V4..	PSD1MW1300	-	890SD-532100B...	31V4-D0005-B...
NK620E_V..	C3S038V4..	PSD1MW1300	-	890SD-531450B...	31V4-D0004-B...
NK620E_R..	C3S075V4..	PSD1MW1400	-	890SD-532100B...	31V4-D0006-B...
NK620E_J..	C3S150V4..	PSD1MW1600	-	890SD-532160B...	31V4-D0006-B...
NK630E_V..	C3S038V4..	PSD1MW1300	-	890SD-531450B...	31V4-D0004-B...
NK630E_R..	C3S075V4..	PSD1MW1400	-	890SD-532100B...	31V4-D0006-B...
NK630E_N..	C3S150V4..	PSD1MW1600	-	890SD-532160B...	31V4-D0010-B...
NK820E_X..	C3S075V4..	PSD1MW1400	-	890SD-532100B...	31V4-D0006-B...
NK820E_R..	C3S150V4..	PSD1MW1600	-	890SD-532160B...	31V4-D0012-B...
NK840E_Q..	C3S150V4..	PSD1MW1600	-	890SD-532160B...	31V4-D0012-B...
NK840E_K..	C3S300V4..	PSD1MW1800	-	890SD-532240C...	31V4-E0023-B...
NK860E_J..	C3S300V4..	PSD1MW1800	-	890SD-532240C...	31V4-E0023-B...
400 VAC power supply - three-phased - water cooled					
NK310W_F..	C3S150V4..	PSD1MW1600	-	890SD-532160B...	31V4-E0016-B...
NK420W_D..	C3S300V4..	PSD1MW1800	-	890SD-532240C...	31V4-E0023-B...
NK430W_D..	C3S300V4..	PSD1MW1800	-	890SD-532240C...	31V4-F0032-B...
NK620W_C..	C3S300V4..	PSD1MW1800	-	890SD-53230SC...	31V4-G0045-B...
NK630W_D..	C3H050V4..	-	-	890SD-532590D...	31V4-G0060-B...
NK820W_G..	C3H050V4..	-	-	890SD-532590D...	31V4-G0060-B...
NK840W_D..	C3H090V4..	-	-	890SD-432730E...	31V4-H0105-B...
NK860W_D..	C3H090V4..	-	-	890SD-432730E...	31V4-G0073-B...

Dimensions

Motor	Dimensions [mm]		
	A	B	L
NK310	62	14	77
NK420	80	20	94
NK430			119
NK620	111	26	106
NK630			135
NK820	143	40	119
NK840			179
NK860			242
NK310W	82	14	85
NK420W	100	20	102
NK430W			127
NK620W	131	26	114
NK630W			143
NK820W	163	40	120
NK840W			180
NK860W			243

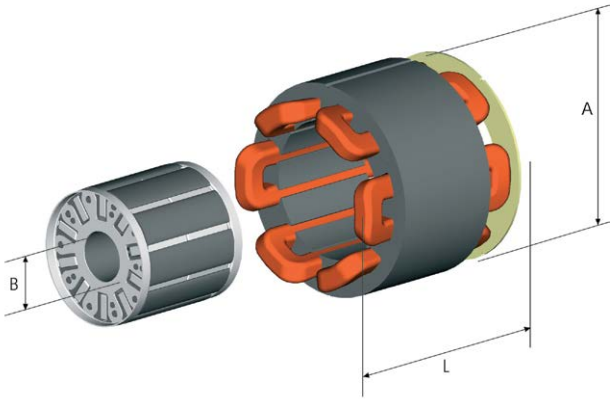

Option

Several types of sensor are available for use with servo motor kits depending upon the needs of the application, such as environment, resolution and accuracy: resolver, high resolution sensor, optical encoder...

Order Code NK Series

	1	2	3	4	5	6	7
Order example	**NK310**	**E**	**A**	**P**	**R1**	**0**	**00**

1	Motor type	
	NK310 NK420 NK430 ...	see table "Technical Data"
2	Cooling	
	E	Natural cooling
	W	Water cooling
3	Feedback sensors/Motors	
	A	2 pole resolver
	K	Without sensor (standard)
	P	Absolute single-turn encoder HIPERFACE DSL SIL2 - EKS36
	Q	Absolute multi-turn encoder HIPERFACE DSL SIL2 - EKM36
	R	Absolute single-turn HIPERFACE encoder 128 ppt SKS36
	S	Absolute multi-turn HIPERFACE encoder 128 ppt SKM36

4	Motor type	
	P T J ...	see table "Technical Data"
5	Fix code	
	R1	
6	Thermal protection + Brake/Motors	
	0	Without (standard)
	1	PTC
	6	KTY
7	Mechanical characteristics/Motors	
	00	Standard
	XX	Customization (on request)

Feedback Sensors

2 poles resolver - option A
• Accuracy: ±10' max
• Transformation ratio: 0.5 ±5 %
• Max. operating speed: 17 000 min^{-1}
• Working temperature range: -55...+155 °C
Single turn / Multiturn absolute encoder HIPERFACE SKS/SKM36 - option R/S
• Number of sine/cosine periods per revolution: 128
• Absolute position per revolution: 4096 (12 bits)
• Number of absolutely encodable revolutions: 4096 (SKM36)
• Max. operating speed SKS36: 12 000 min^{-1}
• Max. operating speed SKM36: 9000 min^{-1}
• Working temperature range: -20...+110 °C
Single turn / Multiturn absolute encoder HIPERFACE EKS/EKM36 - option P/Q
• Up to 20 bit resolution per revolution
• Number of absolutely encodable revolutions: 4096 (EKM)
• SIL2 certified
• Max. operating speed: 12 000 min^{-1} (EKS), 9000 min^{-1} (EKM)
• Working temperature range: -20...+115 °C

FRAMELESS SERVO MOTOR – K SERIES

Description

K Series frameless motor are the ideal solution for machine designs that require high performance at low voltages. Kit motors allow for direct integration without any mechanical transmission device, eliminating parts that add size and complexity. Use of Frameless Kit Motors results in a smaller, more reliable system.

Advantages

- Low voltage
- Compact size (length)
- Large hollow shaft
- Integrated Hall Effect sensor as an option
- Global cost reduction
- Increased reliability and reduced maintenance
- High dynamic performance and power density: increased productivity and reduced size when compared to induction motors
- Simple, light and compact machine design
- No coupling systems needed
- Greater stiffness and robustness of the system
- Low noise level
- Integration assistance available

Application

- Medical
- Hand Tool
- Packaging Machinery
- Rotating Table
- Special Machines
- Pump
- Compressor

Technical Characteristics Overview

Cooling		Natural cooling
Power	[kW]	0.06...2
Torque	[Nm]	0.07...23
Max Speed	[min^{-1}]	10000
Number of poles		4 (K32) / 6 (K44) / 8 (K64) / 12 (K89) / 18 K178)
Diameter	[mm]	32/44/64/89/178
Power supply	[V*C]	12/24/48/96 VDC 240 VAC only for size K178

Torque/Speed Curve

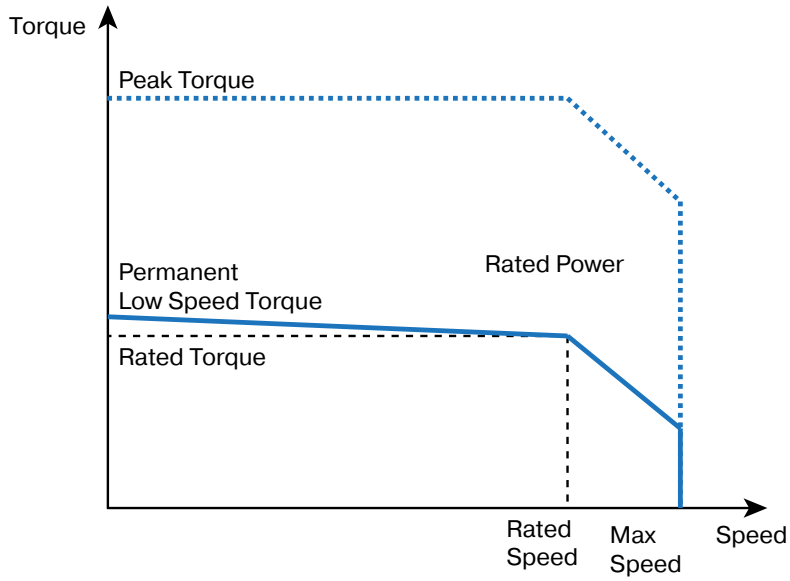

Technical Data

Motor	Rated Power Pn	Rated Torque Mn	Rated Speed Nn	Rated Current In	Low speed torque Mo	Low speed Current Io	Peak Torque M peak	Peak Current I peak	Max. Speed N max	Frequency at max speed	Moment of Inertia J
	[kW]	[Nm]	[min^{-1}]	[Arms]	[Nm]	[Arms]	[Nm]	[Arms]	[min^{-1}]	[Hz]	[kgmm^2]
24 VDC power supply											
K032050-7Y_	0.059	0.072	7795	3.1	0.074	3.2	0.26	11.2	10000	333	0.32
K032050-8Y_	0.042	0.074	5473	2.5	0.075	2.5	0,26	8.8	8155	272	0.32
K032050-EY_	0.020	0.074	2515	1.6	0.075	1.6	0,26	5.5	5126	171	0.32
K032100-7Y_	0.049	0.12	3744	2.7	0.13	2.7	0.44	9.6	5320	177	0.63
K032100-8Y_	0.034	0.13	2572	2.1	0.13	2.2	0.45	7.6	4111	137	0.63
K032100-EY_	0.014	0.13	1071	1.3	0.13	1.4	0.45	4.7	2584	86	0.63
K032200-7Y_	0.036	0.20	1704	2.2	0.21	2.2	0,72	7.8	2649	88	1.3
K032200-8Y_	0.024	0.21	1118	1.7	0.21	1.7	0.73	6.1	2047	68	1.3
K032200-EY_	0.008	0.21	365	1.1	0.21	1.1	0.73	3.9	1287	43	1.3
K044050-7Y_	0.073	0.19	3763	4.1	0.19	4,2	0.66	14.6	5361	268	1.4
K044050-8Y_	0.053	0.19	2723	3.3	0.19	3,3	0.66	11.6	4288	214	1.4
K044050-EY_	0.023	0.19	1173	2.1	0.19	2.1	0.66	7.3	2680	134	1.4
K044100-7Y_	0.061	0.33	1771	3.6	0.33	3.6	1.16	12.6	2657	133	2.9
K044100-8Y_	0.043	0.33	1250	2.8	0.33	2.9	1.15	10.1	2126	106	2.9
K044100-EY_	0.016	0.33	474	1.8	0.33	1.8	1.16	6.3	1329	66	2.9
K044200-7Y_	0.045	0.53	804	2.9	0.54	2.9	1.88	10.3	1334	67	5.8
K044200-8Y_	0.030	0.53	539	2.3	0.53	2.3	1.87	8.2	1068	53	5.8
K044200-EY_	0.008	0.54	145	1.5	0.54	1.5	1.88	5.1	667	33	5.8

Technical Data

Motor	Rated Power Pn	Rated Torque Mn	Rated Speed Nn	Rated Current In	Low speed torque Mo	Low speed Current Io	Peak Torque M peak	Peak Current I peak	Max. Speed N max	Frequency at max speed	Moment of Inertia J
	[kW]	[Nm]	[min^{-1}]	[Arms]	[Nm]	[Arms]	[Nm]	[Arms]	[min^{-1}]	[Hz]	[kgmm^2]
24 VDC power supply											
K064050-8Y_	0.058	0.53	1053	4.0	0.53	4.0	1.86	14.0	1830	122	9
K064050-9Y_	0.039	0.53	700	3.2	0.53	3.2	1.85	11.1	1464	98	9
K064050-EY_	0.022	0.53	396	2.5	0.53	2.5	1.87	8.8	1144	76	9
K064100-8Y_	0.047	0.93	484	3.5	0.94	3.5	3.29	12.3	915	61	18
K064100-9Y_	0.030	0.93	305	2.8	0.93	2.8	3.28	9.8	732	49	18
K064100-EY_	0.015	0.94	152	2.2	0.94	2.2	3.30	7.7	572	38	18
K064200-8Y_	0.033	1.56	204	2.9	1.57	2.9	5.50	10.3	457	30	36
K064200-9Y_	0.018	1.56	113	2.3	1.56	2.3	5.47	8.2	366	24	36
K064200-EY_	0.006	1.57	36	1.8	1.57	1.8	5.51	6.5	286	19	36
K089050-6Y_	0.117	1.33	839	7.5	1.34	7.6	4.72	26.6	1373	137	37
K089050-7Y_	0.082	1.32	597	6.0	1.33	6.1	4.66	21.3	1115	112	37
K089050-9Y_	0.030	1.31	216	3.8	1.32	3.9	4.62	13.5	714	71	37
K089100-6Y_	0.098	2.35	396	6.6	2.37	6.7	8.32	23.4	686	69	78
K089100-7Y_	0.066	2.33	272	5.3	2.34	5.4	8.22	18.8	558	56	78
K089100-9Y_	0.019	2.32	77	3.4	2.32	3.4	8.15	11.9	357	36	78
K089200-4Y_	0.153	3.9	379	8.8	3.9	8.9	13.7	31.3	558	56	150
K089200-7Y_	0.045	3.9	111	4.4	3.9	4.5	13.7	15.6	279	28	150
K089200-9Y_	0.004	3.9	11	2.8	3.9	2.8	13.6	9.9	178	18	150
K178050-6Y_	0.217	7.0	297	13.9	7.0	14.0	26.8	53.3	486	73	470
K178050-8Y_	0.100	7.0	137	8.8	7.0	8.8	26.7	33.6	307	46	470
K178050-EY_	0.024	7.0	33	5.6	7.0	5.6	26.6	21.2	194	29	470
K178100-8Y_	0.077	13.6	54	8.6	13.7	8.6	48.0	30.2	153	23	920
K178100-9Y_	0.035	13.7	24	6.8	13.7	6.8	48.0	23.9	121	18	920
K178200-8Y_	0.047	23.2	19	7.3	23.2	7.3	81.5	25.7	77	12	1800
K178200-9Y_	0.009	23.2	4	5.8	23.2	5.8	81.6	20.3	61	9	1800
240 VAC power supply											
K178050-6Y_	1.43	4.6	3000	9.1	7.0	14.0	26.8	53.3	3000	450	470
K178050-8Y_	1.43	4.6	3000	5.7	7.0	8.8	26.7	33.6	3000	450	470
K178050-EY_	1.39	5.4	2477	4.3	7.0	5.6	26.6	21.2	2818	423	470
K178100-8Y_	2.05	9.8	2006	6.1	13.7	8.6	48.0	30.2	2225	334	920
K178100-9Y_	1.82	11.3	1531	5.7	13.7	6.8	48.0	23.9	1761	264	920
K178100-EY_	1.51	12.1	1192	4.8	13.6	5.4	47.8	19.1	1409	211	920
K178200-8Y_	2.00	19.2	994	6.1	23.2	7.3	81.5	25.7	1112	167	1800
K178200-9Y_	1.66	20.6	768	5.1	23.2	5.8	81.6	20.3	881	132	1800
K178200-EY_	1.34	21.3	601	4.3	23.1	4.6	81.3	16.2	705	106	1800

Other power voltages are possible – see technical manual or consult us

Associated Drives

230 VAC power supply - single or three-phased		
Motor	**Compax3**	**AC890**
K178050-6Y_	C3S150V2...	890SD-232240C...
K178050-8Y_	C3S100V2...	890SD-232165B...
K178050-EY_	C3S100V2...	890SD-232110B...
K178100-8Y_	C3S100V2...	890SD-232165B...
K178100-9Y_	C3S100V2...	890SD-232110B...
K178100-EY_	C3S063V2...	890SD-232110B...
K178200-8Y_	C3S100V2...	890SD-232110B...
K178200-9Y_	C3S063V2...	890SD-232110B...
K178200-EY_	C3S063V2...	890SD-232110B...

Dimensions

Motor	Dimensions [mm]		
	D	d	L
K032050	31.76	7.62	25.9
K032100			38.6
K032200			64.0
K044050	44.45	13.96	29.15
K044100			41.85
K044200			67.25
K064050	63.5	23.51	32.4
K064100			45.1
K064200			70.5
K089050	88.9	40.63	33.0
K089100			45.7
K089200			71.1
K178050	177.8	95.74	53.95
K178100			66.65
K178200			92.05

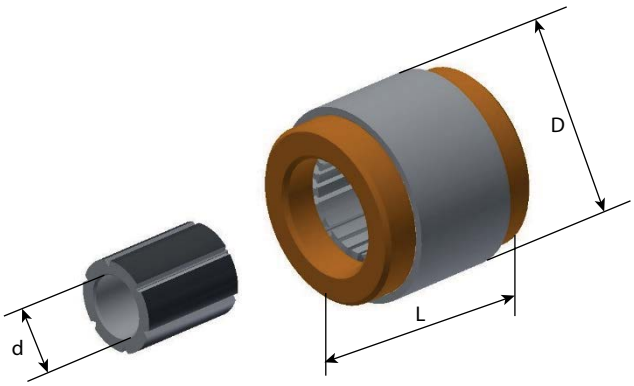

Order Code K Series

	1	2	3	4	5	6		7
Order example	**K**	**32**	**50**	**E**	**Y**	**1**	**-**	**CE**

1	Motor Series	
	K	
2	Motor Size	
	32 44 ...	see table "Technical Data"
3	Motor Stack Length	
	50	0.50 in
	100	1.00 in
	200	2.00 in

4	Winding	
	7 8 ...	see table "Technical Data"
5	Connection	
	Y	Star connection
6	Commutation - Hall effect sensor	
	1	Without Hall effect sensor
	2	With Hall effect sensor [1]
7	Certification	
	CE	CE Conformity

[1] Option Hall sensor is not available with motor size K178

FRAMELESS SPINDLE SERVO MOTOR – SKW SERIES

Description

SKW motors are compact and highly dynamic permanent magnet synchronous servomotors for mono and multi spindle applications up to 21 kW.
Delivered as separate components to be integrated into the mechanical structure of the machine, SKW motors offer constant torque capabilities over a wide speed range with very small dimensions.
SKW motors are available for original equipment manufacturers over 50 motors/ year. Please contact Parker.

Advantages

- Compactness (small external diameter)
- Large hollow shaft
- Increased internal diameter compared to other solutions: increased rigidity and greater capacity for bar stock handling in automatic lathes
- High resistance (Oil proof)
- Compatible with cost effective sensorless drives from Parker and third parties
- Accurate speed for the spindle
  - for the best surface finish
  - for a shorter cycle time
  - for a longer tool life time
- Cold permanent magnet technology: reduced heating in the bearings compared to induction motors, low dilatation effect
- Global cost reduction
- Increased reliability and reduced maintenance
- High dynamic performance and power density: increased productivity and reduced size when compared to induction motors
- Simple, light and compact machine design
- No coupling systems needed
- Greater stiffness and robustness of the system
- Low noise level
- Integration assistance available

Applications

- Machine Tools (electro spindle)
- Multi Spindle Lathes

Technical Characteristics Overview

Cooling		Water cooling
Power	[kW]	0.2...7.5
Torque	[Nm]	4...36
Max Speed	[min^{-1}]	12000
Number of poles		10
Diameter	[mm]	73/82/91/96
Power supply	[VAC]	400

Torque/Speed Curve

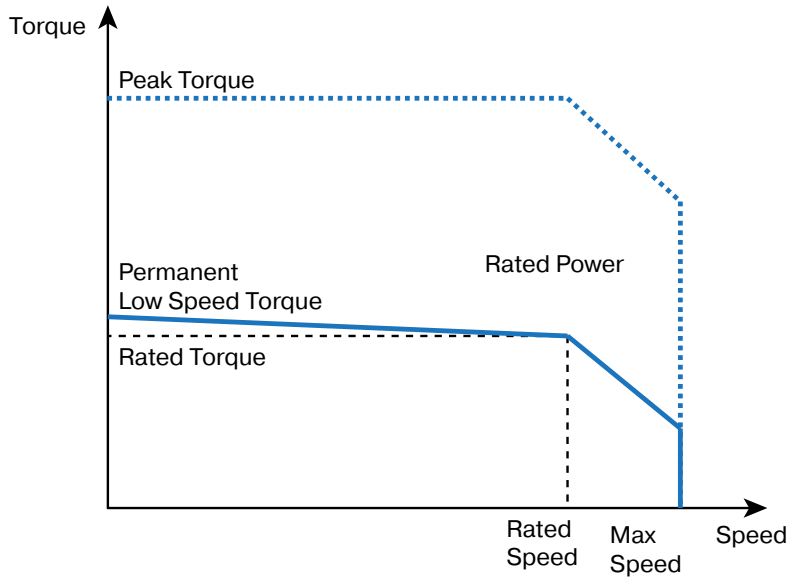

Technical Data

Motor	Rated Power Pn	Rated Torque Mn	Rated Speed Nn	Rated Current In	Low speed torque Mo	Low speed Current Io	Peak Torque M peak	Peak Current I peak	Max. Speed N max	Frequency at max speed	Moment of Inertia J
	[kW]	(Nm)	[min^{-1}]	[Arms]	[Nm]	[Arms]	[Nm]	[Arms]	[min^{-1}]	[Hz]	[kgmm^2]
400 VAC power supply - three-phased											
SKW073-050-LAM	3.1	4.0	7470	10.4	4.0	10.2	8.3	20.0	12000	1000	170
SKW073-100-LAM	6.3	8.8	6810	21.1	10.0	23.2	17.8	40.0	12000	1000	280
SKW073-150-LAM	9.7	13.5	6820	27.3	15.4	30.4	28.4	53.8	11000	917	390
SKW073-200-LAM	13.0	19.3	6450	40.9	21.8	45.2	37.8	75,.8	11000	917	500
SKW082-046-LAM	5.1	4.0	12000	10.2	4.4	10.7	8.6	20.0	12000	1000	370
SKW082-092-LAM	10.7	9.3	11000	21.6	10.1	22.8	23.0	48.6	11000	917	670
SKW082-138-LAM	15.3	14.6	10000	30.6	15.8	32.3	31.0	60.0	10000	833	970
SKW082-184-LAM	21.2	20.3	10000	44.7	22.2	47.7	44.2	90.0	10000	833	1300
SKW091-046-LAM	6.9	5.5	12000	14.3	6.5	16.3	10.7	28.2	12000	1000	370
SKW091-092-LAM	15.4	12.2	12000	29.4	15.1	35.4	23.0	55.6	12000	1000	670
SKW091-138-LAM	20.8	19.9	10000	40.1	23.8	47.1	36.1	73.3	10000	833	970
SKW091-184-LAM	28.0	26.8	10000	56.8	31.9	66.4	48.1	103.4	10000	833	1300
SKW096-046-LAM	3.6	6.9	5010	12.9	7.1	13.1	13.7	26.0	10000	833	1000
SKW096-092-LAM	7.8	16.3	4570	28.1	16.8	28.7	33.8	60.0	10000	833	1800
SKW096-138-LAM	11.7	26.4	4240	41.4	27.4	42.4	54.3	87.9	9000	750	2500
SKW096-184-LAM	16.2	36.0	4300	59.6	37.4	61.2	70.6	120.0	9000	750	3300

Associated Drives

Product Code	Drive Reference		
	AC30	AC890	Compax3
SKW073_050LAM	31V-4E0023-B... (16A@ , OL 180% /3s)	890SD-532240C (16A@8kHz, OL 200%/4s)	C3S150V4...
SKW073_100LAM	31V-4F0038-B... (32A@ , OL 180% / 3s)	890SD-532390D (26A@8kHz, OL 200%/4s)	C3S300V4...
SKW073_150LAM	31V-4G0060-B... (45A@ , OL 180% / 3s)	890SD-532450D (28A@8kHz, OL 200%/4s)	C3S300V4...
SKW073_200LAM	31V-4H0105-B... (87A@ , OL 180% / 3s)	890SD-532590D (50A@4kHz, OL 200%/4s)	C3H050V4...
SKW082_046LAM	31V-4E0023-B... (16A@ , OL 180% /3s)	890SD-532240C (16A@8kHz, OL 200%/4s)	C3S150V4...
SKW082_092LAM	31V-4F0038-B... (32A@ , OL 180% / 3s)	890SD-532390D (26A@8kHz, OL 200%/4s)	C3S300V4...
SKW082_138LAM	31V-4G0060-B... (45A@ , OL 180% / 3s)	890SD-532450D (38A@4kHz, OL 200%/4s)	C3S300V4...
SKW082_184LAM	31V-4H0105-B... (87A@ , OL 180% / 3s)	890SD-532590D (50A@4kHz, OL 200%/4s)	C3H050V4...
SKW091_046LAM	31V-4F0032-B... (23A@ , OL 180% / 3s)	890SD-532240C (16A@8kHz, OL 200%/4s)	C3S300V4...
SKW091_092LAM	31V-4G0073-B... (60A@ , OL 180% / 3s)	890SD-532450D (38A@4kHz, OL 200%/4s)	C3H050V4...
SKW091_138LAM	31V-4H0105-B... (87A@ , OL 180% / 3s)	890SD-532450D (38A@4kHz, OL 200%/4s)	C3H050V4...
SKW091_184LAM	31V-4H0145-B... (145A@ , OL 110% / 60s)	890SD-432730E (76A@4kHz, OL110%/60s)	C3H090V4...
SKW096_046LAM	31V-4F0032-B... (23A@ , OL 180% / 3s)	890SD-532240C (16A@8kHz, OL 200%/4s)	C3S150V4...
SKW096_092LAM	31V-4G0060-B... (45A@ , OL 180% / 3s)	890SD-532450D (28A@8kHz, OL 200%/4s)	C3S300V4...
SKW096_138LAM	31V-4G0073-B... (60A@ , OL 180% / 3s)	890SD-532590D (50A@4kHz, OL 200%/4s)	C3H050V4...
SKW096_184LAM	31V-4H0145-B... (145A@ , OL 110% / 60s)	890SD-432730E (76A@4kHz, OL110%/60s)	C3H090V4...

Dimensions

Product Code	Dimensions [mm]		
	Total length L	Hollow shaft diameter d	External diameter D
SKW073_050LAM	114	35	80
SKW073_100LAM	164	35	80
SKW073_150LAM	219	35	80
SKW073_200LAM	274	35	80
SKW082_046LAM	104	44	96
SKW082_092LAM	150	44	96
SKW082_138LAM	201	44	96
SKW082_184LAM	252	44	96
SKW091_046LAM	104	44	102
SKW091_092LAM	155	44	102
SKW091_138LAM	206	44	102
SKW091_184LAM	262	44	102
SKW096_046LAM	104	60	108
SKW096_092LAM	155	60	108
SKW096_138LAM	206	60	108
SKW096_184LAM	262	60	108

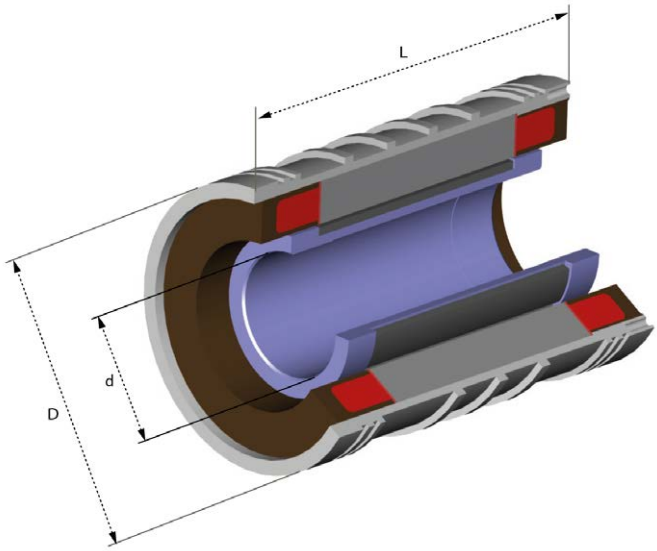

Order Code SKW Series

	1	2	3	4	5	6	7	8	9
Order example	**SK**	**W**	**073**	**S**	**050**	**LAM**	**R**	**3**	**000**

1	Product series	
	SK	Frameless permanent magnet servomotors
2	Cooling method	
	W	Water cooling (standard)
3	External diameter without water jacket	
	073	73 mm
	082	82 mm
	091	91 mm
	096	96 mm
4	Element	
	-	Motor (stator + rator)
	S	Stator
	R	Rotor
5	Active part length	
	050 ...	See table "Dimensions"
6	Torque/Speed characteristics	
	LAM ...	See table "Technical Data" (other characteristics on request)
7	Unused character	
	R	
8	Mechanical option	
	2	Without water jacket, with hub (only on request)
	3	With water jacket, with hub (standard)
9	Option	
	000	Standard motor

FRAMELESS HIGH SPEED MOTOR – HKW SERIES

Description

HKW motors are high performance permanent magnet synchronous servomotors for spindle applications up to 276 kW.

Delivered as separate components to be integrated into the mechanical structure of the machine, HKW motors benefit from the use of field weakening, in order to achieve both high torque at slow speed, and very high maximum speed at constant power.

Advantages

- High speed
- High power
- Large hollow shaft
- High resistance (oil proof on request)
- Compatible with Parker drives and third parties
- Accurate speed for the spindle
- for the best surface finish
- for a shorter cycle time
- for a longer tool life time
- Cold permanent magnet technology: reduced heating in the bearings compared to induction motors, low dilatation effect
- Global cost reduction
- Increased reliability and reduced maintenance
- High dynamic performance and power density: increased productivity and reduced size when compared to induction motors
- Simple, light and compact machine design
- No coupling systems needed
- Greater stiffness and robustness of the system
- Low noise level
- Integration assistance available

Applications

- Machines Tools
- Special Machines
- Textile Machines
- Centrifuges
- Compressors

Technical Characteristics Overview

Cooling		Water cooling
Power	[kW]	2.3...276
Torque	[Nm]	4.5...1840
Max Speed	[min^{-1}]	50000
Number of poles		4 - HKW085 6 - HKW108 / HKW155 / HKW195 8 - HKW242 16 - HKW310
Diameter	[mm]	85/108/155/195/242/310

Torque/Speed Curve

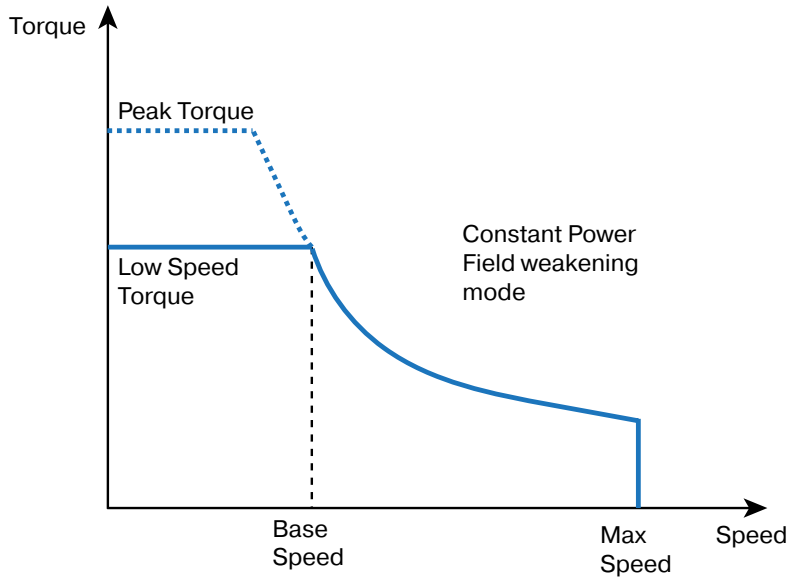

Technical Data

Motor	S1 Power Ps1	Max. Speed Nmax	Frequency at max speed	Low speed torque Mo	Low speed Current Io	Peak Torque M peak	Peak Current I peak	Base Speed Nb	Moment of Inertia J
	[kW]	[min^{-1}]	[Hz]	[Nm]	[Arms]	[Nm]	[Arms]	[min^{-1}]	[kgm^2]
400 VAC power supply - three-phased - Water cooled									
HKW085_066BAU	2.3	50000	1667	4.9	6.8	7.3	13.5	4480	0.00049
HKW085_066BAP	4.9	50000	1667	4.5	12.2	7.3	27	10400	0.00049
HKW085_066BAK	10.2	50000	1667	4.2	22.4	7.3	54	23200	0.00049
HKW085_099BAQ	4.7	50000	1667	7.4	12.6	11	25.1	6070	0.00068
HKW085_099BAL	10	50000	1667	7.3	24.7	11	50.2	13100	0.00068
HKW085_099BAI	15.6	50000	1667	6.8	35	11	78.1	21900	0.00068
HKW108_140CAI	10.2	30000	1500	20	21.9	30	33	4870	0.00143
HKW108_140CAF	15.6	30000	1500	20	32.9	30	49.6	7450	0.00143
HKW108_140CAD	25	30000	1500	20	49.4	30	74.3	11900	0.00143
HKW155_120CAK	23	24000	1200	48	49.5	75	82.5	4600	0.0078
HKW155_120CAH	32	24000	1200	46	65.1	75	113	6640	0.0078
HKW155_120CAF	43	24000	1200	44	82.9	75	151	9330	0.0078
HKW155_160CAP	16	24000	1200	68	36.3	100	56.7	2250	0.0104
HKW155_160CAH	32	24000	1200	68	72.6	100	113	4500	0.0104
HKW155_160CAF	44	24000	1200	66	93.8	100	151	6370	0.0104

Technical Data

Motor	S1 Power Ps1	Max. Speed Nmax	Frequency at max speed	Low speed torque Mo	Low speed Current Io	Peak Torque M peak	Peak Current I peak	Base Speed Nb	Moment of Inertia J
	[kW]	[min^{-1}]	[Hz]	[Nm]	[Arms]	[Nm]	[Arms]	[min^{-1}]	[kgm^2]
400 VAC power supply - three-phased - Water cooled									
HKW195_180CAJ	31	20000	1000	120	75.7	180	137	2470	0.024
HKW195_180CAF	52	20000	1000	120	126	180	228	4140	0.024
HKW195_180CAC	101	20000	1000	110	227	180	456	8770	0.024
HKW195_300CAE	63	20000	1000	200	151	300	274	3010	0.04
HKW195_300CAC	105	20000	1000	200	252	300	456	5010	0.04
HKW195_300CAX	175	20000	1000	200	454	300	821	8350	0.04
HKW242_225DAD	50	13000	867	280	112	360	150	1710	0.105
HKW242_225DAC	67	13000	867	275	146	360	199	2330	0.105
HKW242_225DAB	101	13000	867	260	206	360	299	3710	0.105
HKW242_375DAC	67	13000	867	480	154	600	199	1330	0.175
HKW242_375DAB	101	13000	867	480	230	600	299	2010	0.175
HKW242_375DAA	200	13000	867	460	439	600	598	4150	0.175
HKW242_375DBY	276	13000	867	585	578	800	870	4500	0.175
HKW310_200HAE	77	8000	1067	575	166	900	282	1280	0.23
HKW310_200HAD	95	8000	1067	565	204	900	353	1610	0.23
HKW310_200HAC	115	8000	1067	550	265	900	471	2000	0.23
HKW310_300HAE	76	8000	1067	930	180	1350	282	780	0.34
HKW310_300HAD	95	8000	1067	920	223	1350	353	990	0.34
HKW310_300HAC	120	8000	1067	900	290	1350	471	1270	0.34
HKW310_400HAF	62	8000	1067	1250	152	1800	235	475	0.45
HKW310_400HAC	120	8000	1067	1250	303	1800	471	910	0.45
HKW310_400HAY	230	8000	1067	1080	520	1800	942	2030	0.45
HKW310_500HBY	270	7000	933	1840	616	2700	949	1400	0.56

Associated Drives

540 VDC voltage supply

Motor	PARKER AC890SD	
	Drive	Speed limit[1] N_{max} [min^{-1}]
HKW085_066BAU	890SD-532160B0-B00-...	13800
HKW085_066BAP	890SD-232300C0-B00-...	27500
HKW085_066BAK	890SD-532450D0-B00-...	30000
HKW085_099BAQ	890SD-232300C0-B00-...	17000
HKW085_099BAL	890SD-532450D0-B00-...	30000
HKW085_099BAI	890SD-432730E0-0...	30000
HKW108_140CAI	890SD-532390D0-B00-...	11300
HKW108_140CAF	890SD-532590D0-B00-...	17000
HKW108_140CAD	890SD-432870E0-0...	20000
HKW155_120CAP	890SD-532450D0-B00-...	7300
HKW155_120CAK	890SD-432730E0-0...	10700
HKW155_120CAH	890SD-433105F...	14700
HKW155_120CAF	890SD-433156F...	19600
HKW155_160CAR	890SD-532390D0-B00-...	3500
HKW155_160CAP	890SD-532590D0-B00-...	5500
HKW155_160CAH	890SD-433105F...	11000
HKW155_160CAF	890SD-433156F...	14700
HKW195_180CAJ	890SD-433156F...	6200
HKW195_180CAF	890SD-433316G...	10400
HKW195_180CAC	890SD-433520H...	20000
HKW195_300CAE	890SD-433361G...	7500
HKW195_300CAC	890SD-433520H...	12400
HKW195_300CAX	consult us	

Motor	PARKER AC890SD	
	Drive	Speed limit[1] N_{max} [min^{-1}]
HKW242_225DAD	360 / 302	3800
HKW242_225DAC	360 / 301	5100
HKW242_225DAB	890SD-433361G...	7600
HKW242_375DAC	480 / 402	3100
HKW242_375DAB	890SD-433375H...	4600
HKW242_375DAA	consult us	
HKW242_375DBY	consult us	
HKW310_200HAE	890SD-433361G...	2900
HKW310_200HAD	890SD-433375H...	3600
HKW310_200HAC	890SD-433520H...	4800
HKW310_300HAE	890SD-433361G...	1900
HKW310_300HAD	890SD-433375H...	2400
HKW310_300HAC	890SD-433520H...	3200
HKW310_400HAF	890SD-433316G...	1200
HKW310_400HAC	890SD-433520H...	2400
HKW310_400HAY	consult us	
HKW310_500HBY	consult us	

[1] Due to the back emf or the maximal drive frequency

Dimensions

Stator with cooling jacket

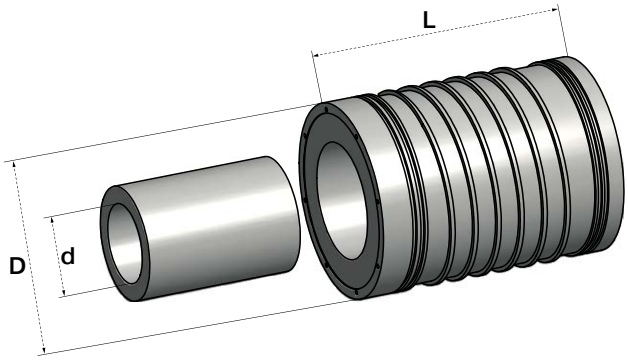

Stator without housing

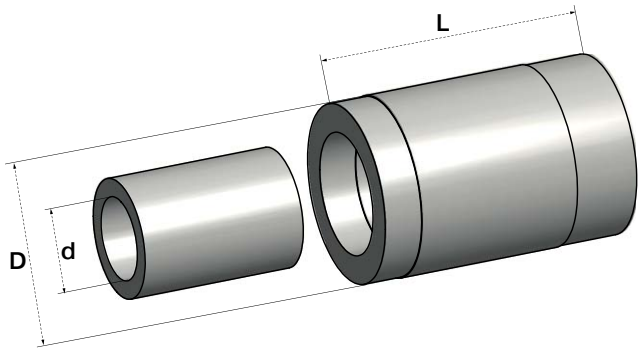

Dimensions [mm]	Without housing			With cooling jacket		
Product	d	D	L	d	D	L
HKW085_066	32	85	134	32	100	136
HKW085_099			167			169
HKW108_140	47	108	208	47	130	210
HKW155_120	75	155.5	192	75	180	194
HKW155_160			232			234
HKW195_180CAx	90	195	274	90	220	276
HKW195_180CAF			283			285
HKW195_180CAC			291			293
HKW195_300CAM/J			394			396
HKW195_300CAE/C			411			413
HKW195_300CAX			464			466

Dimensions [mm]	Without housing			With cooling jacket		
Product	d	D	L	d	D	L
HKW242_225DAD	130	242	322	130	270	324
HKW242_225DAC			330			332
HKW242_225DAB			333			335
HKW242_375DAC			480			482
HKW242_375DAB			477			479
HKW242_375DAA			513			515
HKW242_375DBY			513			515
HKW310_200HAE	180	310	328	180	340	330
HKW310_200HAD			322			324
HKW310_200HAC			325			327
HKW310_300HAE			428			430
HKW310_300HAD			422			424
HKW310_300HAC			425			427
HKW310_400HAF			525			527
HKW310_400HAC			525			527
HKW310_400HAY			540			542
HKW310_500DBY			640			642

	1	2	3	4	5	6	7	8	9
Order example	HK	W	155	–	080	CAP	R	1	000

1	Motor type	
	HK	Frameless permanent magnet servomotors
2	Cooling	
	W	Water cooling (standard)
3	External diameter	
	085	85 mm
	108	108 mm
	155	155 mm
	195	195 mm
	242	242 mm
	310	310 mm
4	Element	
	-	Motor (stator + rator)
	S	Stator
	R	Rotor
5	Length L [mm]	
	140 200 ...	see table "Dimensions"

6	Torque/Speed characteristics	
	BAU BAP BAK ...	see table "Technical data"
7	Fix Code	
	R	
8	Mechanical options	
	1	With housing, without hub *
	3	With housing, with hub
9	Interface	
	000	Standard motor

* Mechanical option 1 is not available with external diameter 85 mm

192-062001 02.2026
© 2026 Parker Hannifin EMEA Sarl. All Rights Reserved.