Commissioning | EN

Inverters

i950 cabinet servo inverter

"Speed Control" technology application

Lenze

Contents

1 About this document **16**
1.1 Document description 16
1.2 Further documents 16
1.3 Notations and conventions 17
2 Safety instructions **18**
2.1 Basic safety instructions 18
2.2 Application as directed 18
2.3 Residual hazards 19
3 Product information **20**
3.1 Features 20
3.2 Identification of the products 26
3.2.1 Product codes 26
3.2.2 Nameplates 27
3.3 License information 28
4 Commissioning **29**
4.1 Important notes 29
4.2 Operating interfaces 30
4.2.1 Engineering tool »EASY Starter« 31
4.2.1.1 Generate a connection between inverter and »EASY Starter« 32
4.2.2 Engineering tool »PLC Designer« 32
4.3 General information on parameter setting 33
4.3.1 Addressing of the parameters 33
4.3.2 Structure of the parameter descriptions 33
4.3.3 Setting and transferring safety parameters 34
4.3.4 Parameter overview lists 35
4.3.5 Favorites 36
4.3.5.1 Configuring the "Favorites" 36
4.4 Commissioning steps 38
4.5 Saving the parameter settings 39
4.5.1 Save parameter settings with »EASY Starter« 39
5 Basic setting **40**
5.1 Technology Application 40
5.2 Device name 40
5.3 Mains voltage 41
5.4 Function assignment of the inputs and outputs (default setting) 42
5.5 Motor data 43
5.5.1 Select motor from motor catalog 44
5.5.2 Manual setting of the motor data 46
5.6 Motor control mode 49

Contents

6 Technology application (TA) basic settings 50
6.1 Interface selection 51
6.2 Kinematic settings 52
6.2.1 Mass inertia (load/motor) 52
6.2.2 Torque feedforward control 52
6.2.3 Motor/encoder mounting direction 52
6.2.4 Motor/encoder gearbox ratio 53
6.2.5 Motor/encoder feed constant 55
6.2.6 Motor/encoder travel ranges and cycle length 56
6.2.7 Virtual mode 58
6.3 Motion settings 59
6.3.1 Quick stop 59
6.3.2 Halt 60
6.3.3 Following error monitoring 60
6.3.4 Target position detection 61
6.3.5 Motor/encoder standstill detection 61
6.3.6 Conditioning of the encoder signal 61
6.3.7 Behaviour in the event of inverter disable 62
6.3.8 Control modes 63
6.3.9 Manual jog (inching mode) 64
6.3.10 Homing 65
6.3.10.1 Homing process 65
6.3.10.2 Homing modes 67
6.3.10.3 Digital input for reference switch 76
6.3.10.4 Position recovery after mains switching 77
6.3.11 Limitations 78
6.3.11.1 Internal torque limits 78
6.3.11.2 External torque limits 80
6.3.11.3 Maximum values for travel profiles 82
6.3.11.4 Hardware limit switches 83
6.3.11.5 Software limit switches 84
6.3.11.6 Safety limits 85
6.3.12 Dead time compensation 87
6.3.13 Status signals 87
6.4 Defining control sources 89
6.4.1 Source of quick stop 89
6.4.2 Source of error reset 90
6.4.3 Source of digital output 1 90
6.4.4 Source of monitoring signal 91
6.5 System bus communication 92
6.5.1 Inputs 92
6.5.2 Outputs 92
6.5.2.1 Master value output 93
6.5.2.2 Source of touch probe time stamp 94
6.5.3 Distribution of the master values by the master 95
6.5.3.1 Example: System bus master is master value master 96
6.5.3.2 Example: System bus slave is master value master 97
6.5.3.3 Example: Using time stamp of another axis 98
6.6 Monitoring 99

7 Configuring the "Speed Control" TA 100
7.1 Control settings 100
7.2 Interface 101
7.2.1 Control signals 102
7.2.2 Status signals 103
7.2.3 Simulation of the interface 105
7.3 Travel profiles 107
7.4 External travel profile parameters 111
7.5 Signal flow 115
7.6 Functions 117
7.6.1 Selecting the setpoint source 118
7.6.2 Starting and stopping speed operation 120
7.6.3 Speed operation with preset setpoints 124
7.6.4 Inverting the setpoint 125
7.6.5 Connecting the velocity offset 127
7.6.6 Connecting the speed override 129
7.7 Diagnostics 129
8 Configure position control 130
8.1 Basic setting 131
8.1.1 Following error detection and in-position detection 132
8.1.2 Interpolation 133
8.2 Operating mode "CiA 402 cyclic sync position mode (csp)" 134
8.2.1 Default mapping 134
8.2.2 Signal flow 135
8.2.3 Control commands and status information 137
8.3 Process input data (CiA 402 objects) 137
8.4 Process output data (CiA 402 objects) 137
8.5 Monitoring the position error 138
8.6 Position detection with touch probe (TP) 140
8.6.1 Default mapping 140
8.6.2 General mode of operation 141
8.6.3 Filtering of the touch probe signal 141
8.6.4 Compensation of runtime delays 142
8.6.5 Touch probe control word 143
8.6.6 Touch probe status word 144
8.6.7 Detected time stamp and positions 144
8.7 Setpoint diagnostics 145

Contents

9 Configure speed control 146
9.1 Basic setting 146
9.2 Operating mode "CiA 402 velocity mode (vl)" 147
9.2.1 Default mapping 147
9.2.2 Signal flow (servo control) 148
9.2.3 Signal flow (V/f characteristic control) 150
9.2.4 Setpoint factor 153
9.2.5 Dimension factor 153
9.3 Operating mode "CiA 402 cyclic sync velocity mode (csv)" 154
9.3.1 Default mapping 154
9.3.2 Signal flow (servo control) 155
9.3.3 Signal flow (V/f characteristic control) 157
9.3.4 Control commands and status information 159
9.4 Process input data (CiA 402 objects) 159
9.5 Process output data (CiA 402 objects) 159
9.6 Monitoring the speed deviation 160
10 Configuring the torque control 161
10.1 Basic setting 162
10.1.1 Torque limits 163
10.1.2 Speed limitation 164
10.2 Operating mode "CiA 402 cyclic sync torque mode (cst)" 165
10.2.1 Default mapping 165
10.2.2 Signal flow 166
10.2.3 Control commands and status information 168
10.3 Process input data (CiA 402 objects) 168
10.4 Process output data (CiA 402 objects) 168
10.5 Setpoint diagnostics 168

11 Configuring the feedback system 169
11.1 Configure feedback system for motor control 170
11.1.1 General settings 171
11.1.2 Resolver settings 173
11.1.2.1 Resolver error compensation 174
11.1.3 Encoder settings 177
11.1.3.1 SinCos encoder 177
11.1.3.2 SinCos absolute value encoder with HIPERFACE® protocol 178
11.1.3.3 SSI encoder 179
11.1.3.4 One cable technology (OCT) via HIPERFACE DSL® 182
11.1.3.5 Evaluation of the signal quality 186
11.1.4 Detection of changed settings of the feedback system 187
11.1.5 Diagnostics 187
11.2 Second feedback system for the techology application 188
11.2.1 General settings 188
11.2.2 Resolver settings 189
11.2.2.1 Resolver error compensation 190
11.2.3 Encoder settings 193
11.2.3.1 SinCos encoder 193
11.2.3.2 SinCos absolute value encoder with HIPERFACE® protocol 194
11.2.3.3 SSI encoder 196
11.2.3.4 Evaluation of the signal quality 199
11.2.4 Detection of changed settings of the feedback system 200
11.2.5 Diagnostics 200
11.3 Encoder: Evaluation of safely speed and position 201
11.3.1 Parameter setting of the feedback system 201
11.4 Synchronous motor: Pole position identification (PPI) 207
11.4.1 Selection of the PPI method for CiA mode 208
11.4.2 Monitoring the pole position identification 208
11.4.3 Monitoring the validity of the pole position 208
11.4.4 Pole position identification (PPI) 360° 209
11.4.5 Pole position identification (PPI) with minimum movement 213
11.4.6 Pole position identification (PPI) without movement 216
11.5 Cable check 218

Contents

12 Configuring the motor control 223
12.1 Servo control for synchronous motor (SC-PSM) 224
12.1.1 Required commissioning steps 224
12.2 Servo control for asynchronous motor (SC-ASM) 225
12.2.1 Required commissioning steps 225
12.3 V/f characteristic control for asynchronous motor (VFC open loop) 226
12.3.1 Required commissioning steps 226
12.3.2 Basic setting 227
12.3.3 Define V/f characteristic shape 228
12.3.3.1 Linear V/f characteristic 228
12.3.3.2 Square-law V/f characteristic 228
12.3.3.3 User-definable V/f characteristic 229
12.3.4 Activate voltage vector control (Imin controller) 230
12.3.5 Set voltage boost 232
12.3.6 Set load adjustment 233
12.3.7 Set slip compensation 233
12.3.8 Set oscillation damping 234
12.3.9 Optimising the stalling behaviour 235
12.3.10 Flying restart circuit 236
12.4 Parameterisable motor functions 238
12.4.1 DC braking 238
12.4.2 Short-circuit braking 239
12.4.3 Holding brake control 240
12.4.3.1 Basic setting 241
12.4.3.2 Brake holding load 243
12.4.3.3 Torque feedforward control 243
12.4.3.4 Manual brake control 244
12.4.3.5 Reduction of brake supply voltage 244
12.5 Options for optimizing the control loops 245
12.5.1 Automatic motor identification (energized) 245
12.5.2 Tuning of the motor and the speed controller 246
12.5.3 Inverter characteristic 248
12.5.3.1 Compensating for inverter influence 249
12.5.3.2 Extended settings for identification 250
12.5.3.3 Load standard inverter characteristic 250
12.5.4 Motor equivalent circuit diagram data 251
12.5.5 Motor control settings 252
12.5.5.1 Automatic optimizing using auto-tuning 252
12.5.5.2 Speed controller 253
12.5.5.3 Current controller 256
12.5.5.4 ASM field controller 259
12.5.5.5 ASM field weakening controller 260
12.5.5.6 ASM field weakening controller (extended) 260
12.5.5.7 PSM operation outside the voltage range 261
12.5.5.8 Imax controller 262
12.5.5.9 Flying restart controller 262
12.5.5.10 Position controller 263

12.6 Fine adjustment of the motor model 264
12.6.1 Correction of the stator leakage inductance (Lss) 265
12.6.2 Synchronous motor (SM): Compensate temperature and current influences 270
12.6.3 Asynchronous motor (ASM): Identifying Lh saturation characteristic 271
12.6.4 Estimate optimum magnetising current 273
12.7 Parameterise filter elements in the setpoint path 274
12.7.1 Jerk limitation 274
12.7.2 Notch filter (band-stop filter) 275
12.8 Motor protection 278
12.8.1 Motor overload monitoring (i^2xt) 278
12.8.1.1 Parameters for the thermal model 280
12.8.1.2 Speed-dependent evaluation of the motor current 282
12.8.1.3 UL 508-compliant motor overload monitoring 285
12.8.2 Motor temperature monitoring 286
12.8.2.1 Individual characteristic for motor temperature sensor 288
12.8.3 Overcurrent monitoring 288
12.8.4 Motor phase failure detection 289
12.8.5 Motor speed monitoring 289
12.9 Frequency and speed limitations 290
12.10 Testing the motor control 291
12.10.1 General settings for test modes 291
12.10.2 Manual "tension/frequency" test mode 293
12.10.3 Manual "current/frequency" test mode 294
12.10.4 Manual "current pulse" test mode 295
13 I/O extensions and control connections 297
13.1 Configure digital inputs 297
13.1.1 Digital inputs 1 ... 4 297
13.1.2 Digital inputs 5 ... 9 298
13.2 Configure analog inputs 300
13.2.1 Analog input 1 300
13.3 Configure digital outputs 302
13.3.1 Digital output 1 302
13.3.2 Digital output 2 303
13.3.3 Digital outputs 2 ... 6 303
14 Configure engineering port 304
14.1 Basic setting 305
14.2 NTP server addresses 306
14.3 Diagnostics 307

Contents

15 Configuring the network 308
15.1 CiA 402 device profile 309
15.1.1 Supported operating modes 309
15.1.2 Basic setting 310
15.1.3 Process input data 310
15.1.4 Process output data 310
15.1.5 Commands for device state control 311
15.1.5.1 Switch-off 313
15.1.5.2 Switch on 314
15.1.5.3 Enable operation 315
15.1.5.4 Activate quick stop 316
15.1.5.5 Disable operation 317
15.1.5.6 Pulse inhibit 318
15.1.5.7 Reset fault 319
15.1.6 Device states 320
15.1.6.1 Not ready to switch on 322
15.1.6.2 Switch-on inhibited 323
15.1.6.3 Ready to switch on 324
15.1.6.4 Switched on 325
15.1.6.5 Operation enabled 326
15.1.6.6 Quick stop active 327
15.1.6.7 Fault reaction active 328
15.1.6.8 Trouble 329
15.1.7 Operation mode "Manual Jog" 330
15.2 CANopen 331
15.2.1 Supported CANopen objects 332
15.2.2 Commissioning 335
15.2.3 Basic setting and options 336
15.2.3.1 Activating the bus terminating resistor 336
15.2.3.2 Node address setting 336
15.2.3.3 Baud rate setting 336
15.2.3.4 Configuring the device as mini master 337
15.2.3.5 Restarting or stopping the communication 337
15.2.4 Process data transfer 338
15.2.4.1 Data mapping 344
15.2.5 Parameter data transfer 346
15.2.6 Monitoring 348
15.2.6.1 Emergency telegram 348
15.2.6.2 Heartbeat protocol 349
15.2.6.3 Error responses 351
15.2.7 Diagnostics 353
15.2.7.1 LED status display 353
15.2.7.2 Information on the network 353

15.3 onboard EtherCAT - Operation as standard EtherCAT slave ... 356
15.3.1 Commissioning ... 357
15.3.2 Basic setting and options ... 359
15.3.2.1 Synchronisation with "distributed clocks" (DC) ... 359
15.3.3 Process data transfer ... 359
15.3.4 Parameter data transfer ... 360
15.3.5 Monitoring ... 361
15.3.6 Diagnostics ... 362
15.3.6.1 LED status displays ... 362
15.3.6.2 Information on the network ... 362
15.3.6.3 Device identification ... 362
15.3.7 EoE communication ... 363
15.4 onboard EtherCAT - Operation as master or slave on the system bus ... 365
15.4.1 Commissioning ... 367
15.4.2 Basic setting and options ... 368
15.4.3 Process data transfer ... 369
15.4.3.1 Process output data ... 370
15.4.3.2 Process input data ... 371
15.4.4 Monitoring ... 371
15.4.5 Diagnostics ... 372
15.4.5.1 LED status displays ... 372
15.4.5.2 Information on the network ... 372
15.4.5.3 EtherCAT master diagnostics ... 373
15.4.5.4 Device identification ... 382
15.5 EtherCAT ... 383
15.5.1 Commissioning ... 384
15.5.2 Process data transfer ... 387
15.5.2.1 Standard mapping ... 388
15.5.3 Parameter data transfer ... 391
15.5.4 Monitoring ... 391
15.5.5 Diagnostics ... 393
15.5.5.1 LED status display ... 393
15.5.5.2 Information on the network ... 393
15.5.5.3 Error history buffer ... 394
15.5.5.4 Device identification ... 394

Contents

15.6 EtherNet/IP ... 395
15.6.1 Supported CIP objects ... 396
15.6.1.1 0x01-Identity Object ... 396
15.6.1.2 0x04-Assembly Object ... 397
15.6.1.3 0x28-Motor Data Object ... 402
15.6.1.4 0x29-Control Supervisor Object ... 403
15.6.1.5 0x2A-AC Drive Object ... 403
15.6.1.6 0x47-Device Level Ring (DLR) Object ... 404
15.6.1.7 0x48-Quality of Service (QoS) Object ... 404
15.6.1.8 0x67-Lenze Class Object 103 ... 404
15.6.1.9 0x68-Lenze Class Object 104 ... 404
15.6.1.10 0x6E-Lenze Class Object 110 ... 405
15.6.1.11 0xF5-TCP/IP Interface Object ... 405
15.6.1.12 0xF6-Ethernet Link Object ... 406
15.6.2 Commissioning ... 407
15.6.2.1 Required commissioning steps ... 408
15.6.2.2 Save »RSLogix™« project/Load configuration into the Scanner ... 408
15.6.2.3 Restarting or stopping the communication ... 409
15.6.3 Basic setting and options ... 409
15.6.4 Process data transfer ... 411
15.6.4.1 Network configuration of the inverter with EDS file ... 412
15.6.4.2 Network configuration of the inverter without EDS file ... 418
15.6.5 Parameter data transfer ... 424
15.6.6 Monitoring ... 427
15.6.6.1 EtherNet/IP communication monitoring ... 427
15.6.6.2 Other monitoring ... 428
15.6.7 Diagnostics ... 429
15.6.7.1 LED status display ... 429
15.6.7.2 Information on the network ... 429
15.7 PROFINET ... 431
15.7.1 Commissioning ... 433
15.7.1.1 Settings in the »EASY Starter« ... 433
15.7.1.2 Restarting or stopping the communication ... 434
15.7.1.3 Settings in the Siemens »TIA Portal« ... 434
15.7.1.4 Device description file ... 435
15.7.1.5 Establishing a connection to the »EASY Starter« via PROFINET ... 435
15.7.2 Basic setting and options ... 436
15.7.2.1 Station name and IP configuration ... 436
15.7.2.2 Suppress diagnostic messages to the IO controller ... 437
15.7.3 Process data transfer ... 437
15.7.4 Parameter data transfer ... 438
15.7.5 Monitoring ... 439
15.7.6 Diagnostics ... 440
15.7.6.1 LED status display ... 440
15.7.6.2 Information on the network ... 440
15.7.7 PROFIsafe ... 442
15.7.8 PROFIenergy ... 443
15.7.8.1 Supported commands ... 443
15.7.8.2 Supported measured values ... 443

15.8 Monitoring ... 444
16 Device functions ... 445
16.1 Optical device identification ... 445
16.2 Reset parameters to default ... 446
16.3 Saving/loading the parameter settings ... 447
16.4 Enabling the device ... 448
16.5 Restart device ... 448
16.6 Start/stop application ... 449
16.7 Restarting Extended Safety ... 449
16.8 Export logbook ... 449
16.9 Delete logbook files ... 450
16.10 Activate loaded application ... 450
16.11 Uploading the application ... 450
16.12 Inverter control word ... 451
16.13 Access protection ... 452
16.13.1 Write access protection ... 452
16.13.1.1 Write access protection in the »EASY Starter« ... 454
16.13.2 Brand protection ... 456
16.14 Switching frequency changeover ... 456
16.15 Device overload monitoring (ixt) ... 457
16.16 Heatsink temperature monitoring ... 458
16.17 Update device firmware ... 458
16.17.1 Firmware download with »EASY Starter (firmware loader)« ... 458
16.17.1.1 Download via Ethernet connection ... 458
17 Additional functions ... 459
17.1 Brake energy management ... 459
17.1.1 Use of a brake resistor ... 459
17.2 Manual jog parameters ... 460
17.3 Mains failure control ... 461
17.4 Oscilloscope function ... 466

Contents

18 Safety functions 474
18.1 General information and basics 475
18.1.1 Stop functions 475
18.1.2 Prioritisation 475
18.1.3 Restart 476
18.2 Safe torque off (STO) 477
18.3 Safe stop 1 (SS1) 479
18.4 Safe stop 2 (SS2) 482
18.5 Ramp monitoring 484
18.6 Safe operating stop (SOS) 486
18.7 Safe stop emergency (SSE) 488
18.8 Safe maximum speed (SMS) 490
18.9 Safely-limited speed (SLS) 491
18.10 Safe speed monitor (SSM) 498
18.11 Safely-limited increment (SLI) 499
18.12 Safe direction (SDI) 501
18.13 Safely-limited position (SLP) 504
18.14 Safe homing (SHom) 507
18.14.1 Mini-homing 511
18.14.2 Slip compensation 512
18.15 Safe cam (SCA) 514
18.16 Position-dependent safe speed (PDSS) 516
18.17 Safe brake control (SBC) 520
18.18 STO cascading (CAS) 523
18.19 Operation mode selector (OMS) 525
18.20 Repair mode selector (RMS) 528
18.21 Enable switch (ES) 531
18.22 Safe Muting (MUT) 532
18.23 Safe network interfaces 535
18.23.1 PROFIsafe connection 536
18.23.2 FSoE connection 539
18.24 Connection to the applications 542
18.24.1 Safe inputs 542
18.24.2 Safe output 543
18.24.3 Control signals 543
18.24.4 Status signals 546
18.25 Safe parameter setting 551
18.25.1 Safety address 551
18.25.2 Parameter set information 551
18.26 Response times of the safety unit 552
18.27 Calculation of the maximum response times 555
18.28 Diagnostics 556
18.28.1 LED status display 556
18.28.1.1 LED indication for status messages 556
18.28.1.2 LED indication for errors 556
18.28.1.3 LED indication for requested acknowledgement 557
18.28.2 Event history 558
18.28.3 Diagnostic parameters 559
18.29 Device exchange 560

19 Diagnostics and fault elimination **561**
19.1 LED status display 561
19.2 Logbook 562
19.3 Diagnostic parameters 564
19.3.1 Inverter diagnostics 566
19.3.2 Motor diagnostics 569
19.3.3 Network diagnostics 569
19.3.4 I/O diagnostics 570
19.3.4.1 Digital inputs and outputs 570
19.3.4.2 Analog inputs and outputs 571
19.3.5 Diagnostics of the application 571
19.3.6 Service life diagnostics 571
19.3.7 Device identification 572
19.4 Event handling 573
19.4.1 Severity 574
19.4.2 Configuring the severity 575
19.4.3 Configuring the transition response for minor faults 575
19.4.4 Event reset 576
19.5 Events, causes and remedies 577
19.5.1 Event ID overview 577
19.5.2 Causes and remedies 596
19.5.3 Extended Safety - Parameter set plausibility errors 705
20 Technical data **708**
21 Environmental notes and recycling **709**
22 Appendix **710**
22.1 Parameter attribute list 710
22.2 Glossary 749

1 About this document

⚠WARNING!

Read this documentation carefully before starting any work.

► Please observe the safety instructions!

1.1 Document description

This documentation is valid up to firmware version:

Firmware version	Software data version	Date
V01.07.xx.xx	V_1_7_4_002	2022-08-04

1.2 Further documents

For certain tasks, information is available in further documents.

Document	Contents/topics
Planning manual	Basic information on project planning and ordering the product
Mounting and switch-on instructions	Basic information on mounting and initial switch-on of the product

More information

For certain tasks, information is available in other media.

Medium	Contents/topics
Engineering Tools	For commissioning
AKB articles	Additional technical information for users in the Application Knowledge Base
CAD data	Download in different formats from the EASY Product Finder
EPLAN macros	Project planning, documentation and management of projects for EPLAN P8.
Device descriptions	Standardized files for network configuration

Information and tools with regard to the Lenze products can be found on the Internet:
www.Lenze.com → Downloads

1.3 Notations and conventions

Conventions are used in this document to distinguish between different types of information.

Numeric notation		
Decimal separator	Point	Generally shown as a decimal point. Example: 1 234.56
Warnings		
UL Warnings	UL	Are used in English and French.
UR warnings	UR	
Text		
Engineering Tools	" "	Software Example: "Engineer", "EASY Starter"
Icons		
Page reference	🕮	Reference to another page with additional information. Example: 🕮 16 = see page 16
Documentation reference	ⓚ	Reference to other documentation with additional information. Example: ⓚ EDKxxx = see documentation EDKxxx

Layout of the safety instructions

⚠DANGER!

Indicates an extremely hazardous situation. Failure to comply with this instruction will result in severe irreparable injury and even death.

⚠WARNING!

Indicates an extremely hazardous situation. Failure to comply with this instruction may result in severe irreparable injury and even death.

⚠CAUTION!

Indicates a hazardous situation. Failure to comply with this instruction may result in slight to medium injury.

NOTICE

Indicates a material hazard. Failure to comply with this instruction may result in material damage.

2 Safety instructions

2.1 Basic safety instructions

Disregarding the following basic safety instructions and safety information may lead to severe personal injury and damage to property!

- Only use the product as directed.
- Never commission the product in the event of visible damage.
- Never modify the product technically.
- Never commission the product before assembly has been completed.
- Never operate the product without the required covers.
- Connect/disconnect all pluggable connections only in deenergized condition!
- Only remove the product from the installation in the deenergized state.
- The product can – depending on their degree of protection – have live, movable or rotating parts during or after operation. Surfaces can be hot.
- Observe the specifications of the corresponding documentation. This is the condition for safe and trouble-free operation and the achievement of the specified product features.
- The procedural notes and circuit details given in the associated documentation are suggestions and their transferability to the respective application has to be checked. The manufacturer of the product does not take responsibility for the suitability of the process and circuit proposals.
- All work with and on the product may only be carried out by qualified personnel.
  IEC 60364 and CENELEC HD 384 define the qualifications of these persons:
  - They are familiar with installing, mounting, commissioning, and operating the product.
  - They have the corresponding qualifications for their work.
  - They know and can apply all regulations for the prevention of accidents, directives, and laws applicable at the place of use.

Please observe the specific safety information in the other sections!

2.2 Application as directed

- The product is a professional equipment intended for use by trades, specific professions or industry and not for sale to the general public. IEC 60050 [IEV 161-05-05]
- To prevent personal injury and damage to property, higher-level safety and protection systems must be used!
- All transport locks must be removed.
- The product may only be operated under the specified operating conditions and in the specified mounting positions.
- The product is exclusively suitable for installation in control cabinets and, depending on the protection class and design, for wall and motor mounting.
- The product must only be actuated with motors that are suitable for the operation with inverters.
- The product must not be operated in private areas, in potentially explosive atmospheres and in areas with harmful gases, oils, acids and radiation.

2.3 Residual hazards

Even if notes given are taken into consideration and protective measures are implemented, the occurrence of residual risks cannot be fully prevented.

The user must take the residual hazards mentioned into consideration in the risk assessment for his/her machine/system.

If the above is disregarded, this can lead to severe injuries to persons and damage to property!

Product

Observe the warning labels on the product!

Dangerous electrical voltage:
Before working on the product, make sure there is no voltage applied to the power terminals! After mains disconnection, the power terminals will still carry the hazardous electrical voltage for the time given next to the symbol!

Electrostatic sensitive devices:
Before working on the product, the staff must ensure to be free of electrostatic charge!

High leakage current:
Carry out fixed installation and PE connection in compliance with:
EN 61800-5-1 / EN 60204-1

Hot surface:
Use personal protective equipment or wait until the device has cooled down!

Degree of protection - protection of persons and device protection

- Information applies to the mounted and ready-for-use state.
- Information does not apply to the wire range of the terminals.
  - Terminals that are not wired have low protection against physical contact.
  - Terminals for large cable cross-sections have lower classes of protection, e. g. from 15 kW IP10 only.

Device protection

- The maximum test voltage for insulation tests between a control potential of 24 V and PE must not exceed 110 V DC (EN 61800-5-1).

Motor protection

With some settings of the inverter, the connected motor can be overheated.

- E. g. by longer operation of self-ventilated motors at low speed.
- E. g. by longer operation of DC-injection braking.

Protection of the machine/system

Drives can reach dangerous overspeeds.

- E. g. by setting high output frequencies in connection with motors and machines not suitable for this purpose.
- The inverters do not provide protection against such operating conditions. For this purpose, use additional components.

Motor

If there is a short circuit of two power transistors, a residual movement of up to 180°/number of pole pairs can occur at the motor! (e. g. 4-pole motor: residual movement max. 180°/2 = 90°).

3 Product information

3.1 Features

Power range 0.37 kW ... 4 kW

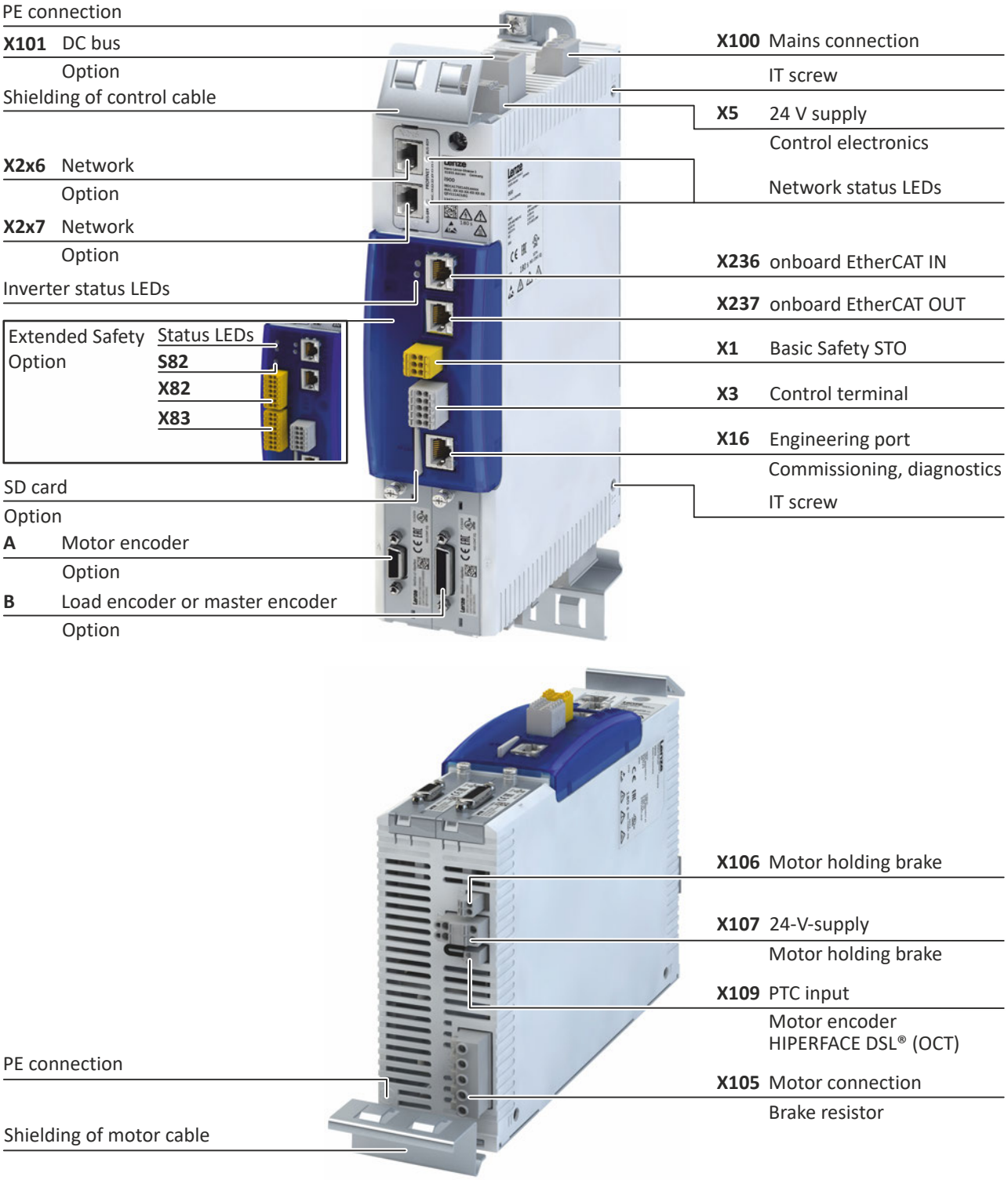

Power range 5.5 kW ... 15 kW

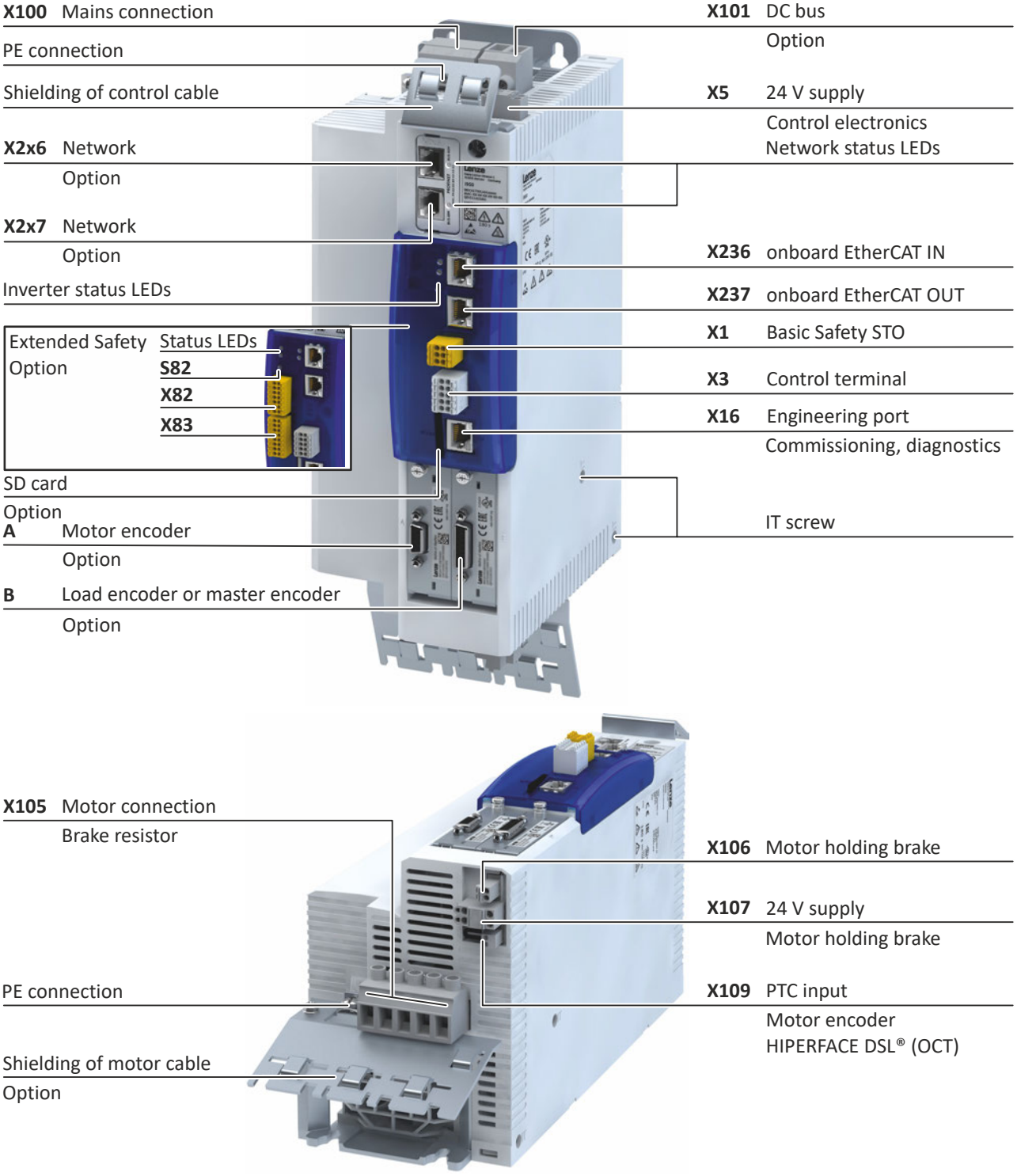

Power range 22 kW

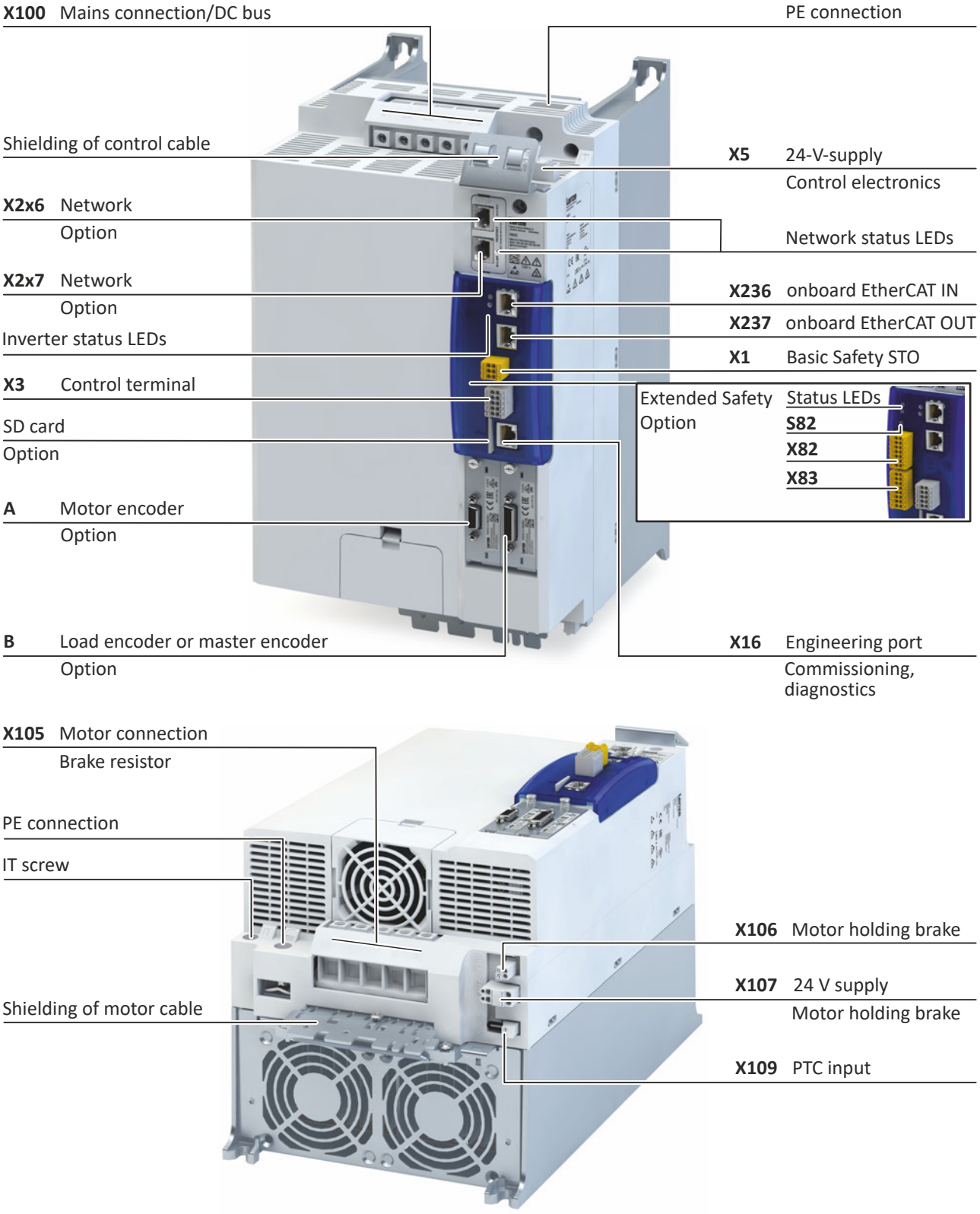

Power range 30 kW ... 45 kW

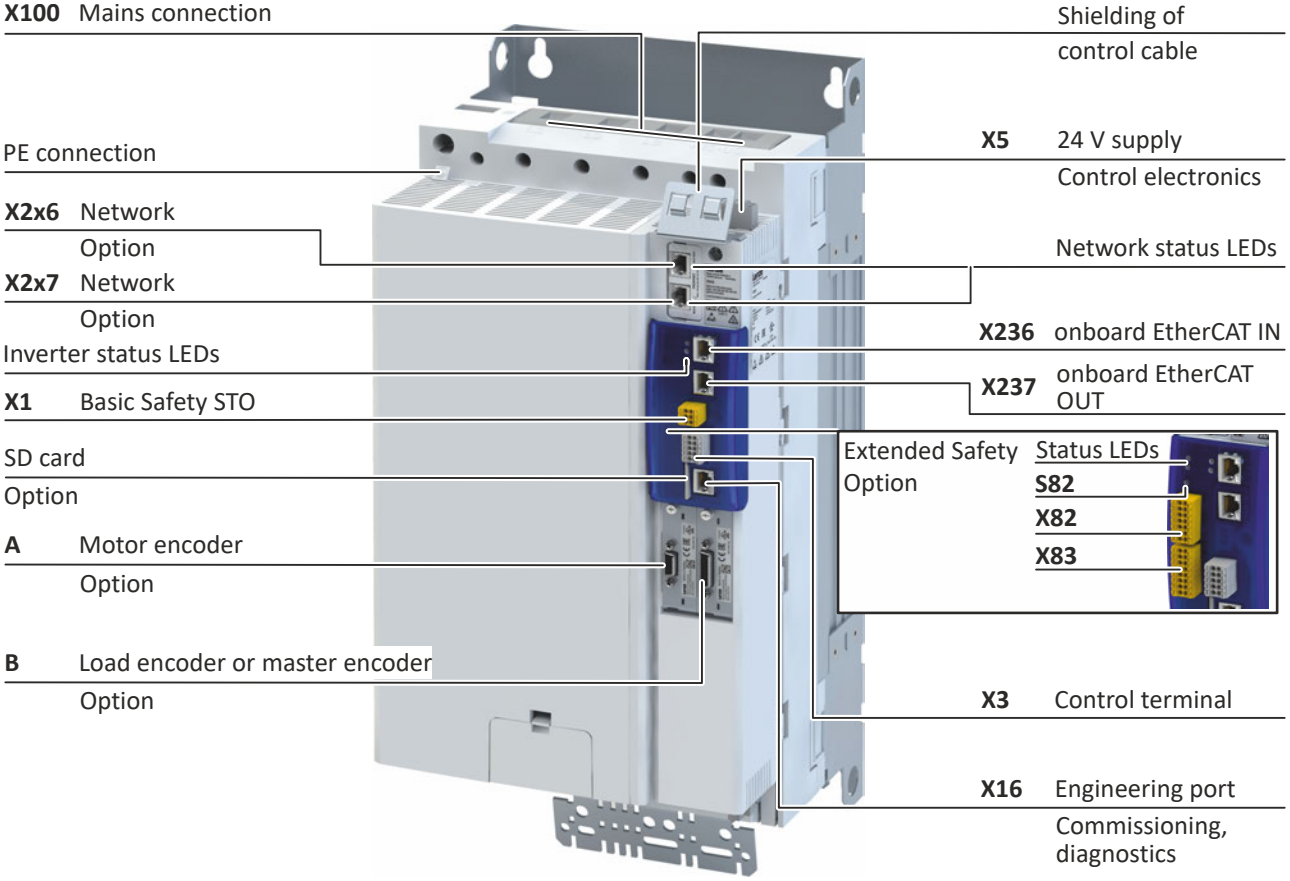

Power range 55 kW ... 75 kW

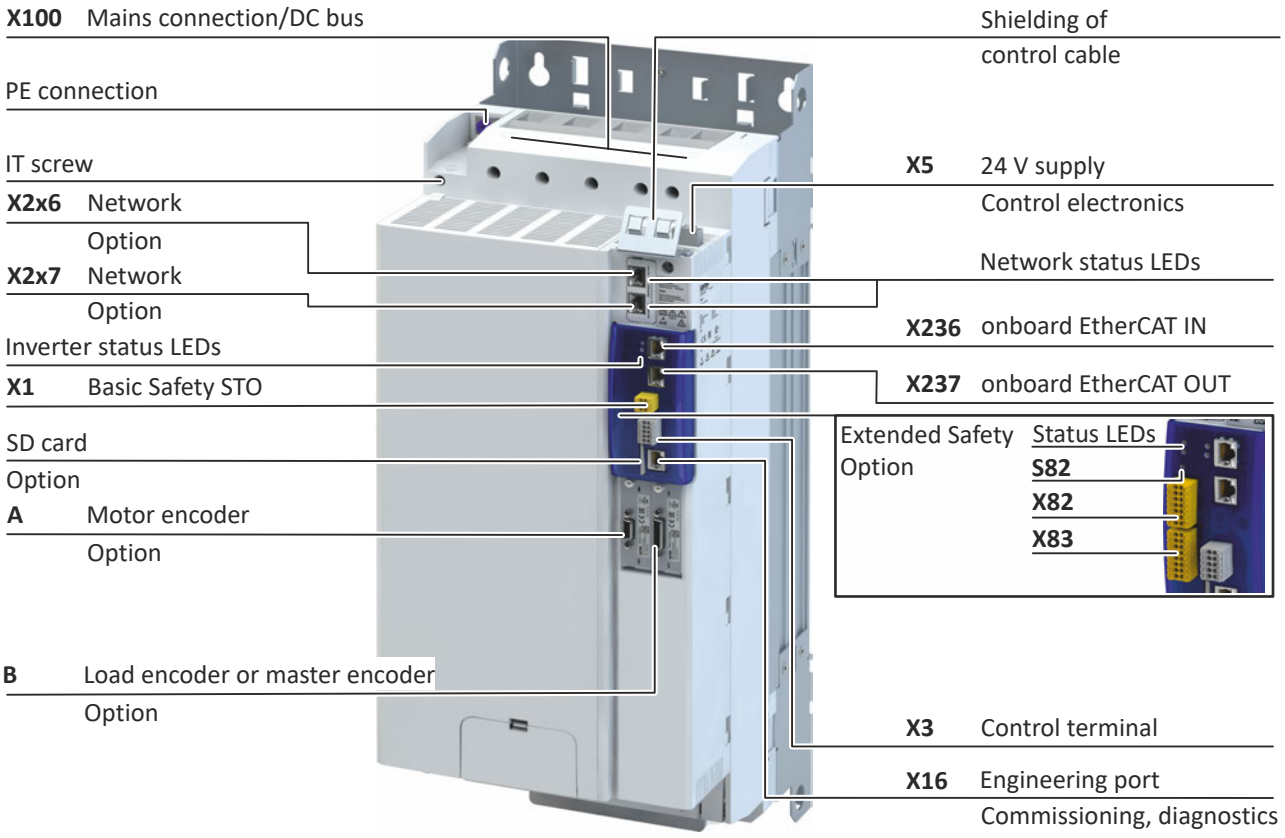

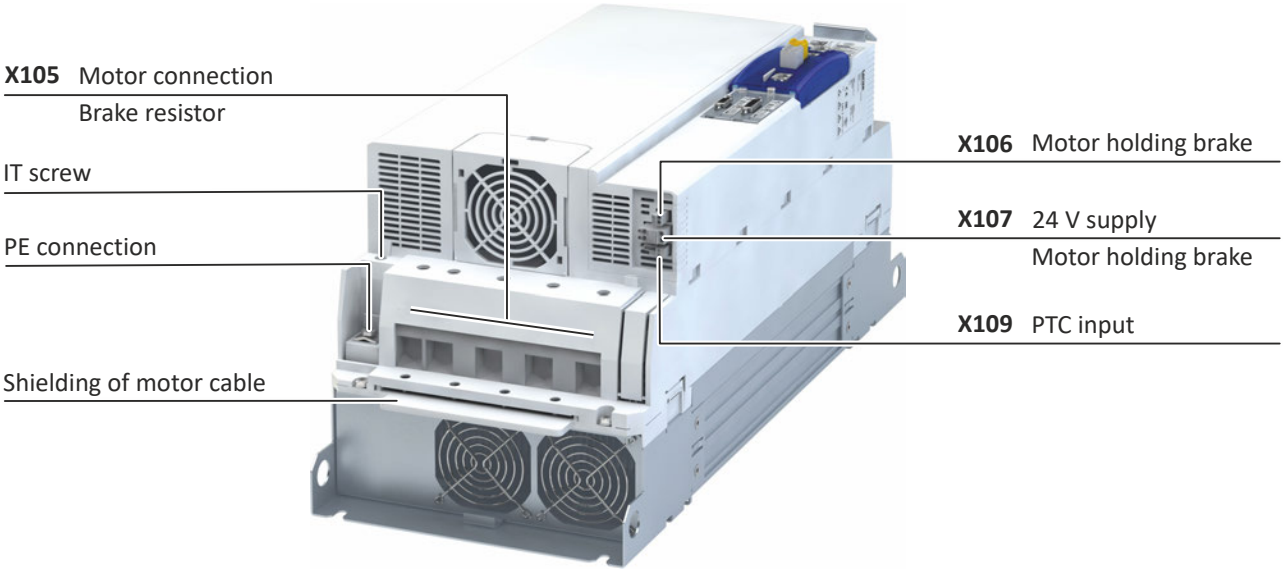

Power range 90 kW ... 110 kW

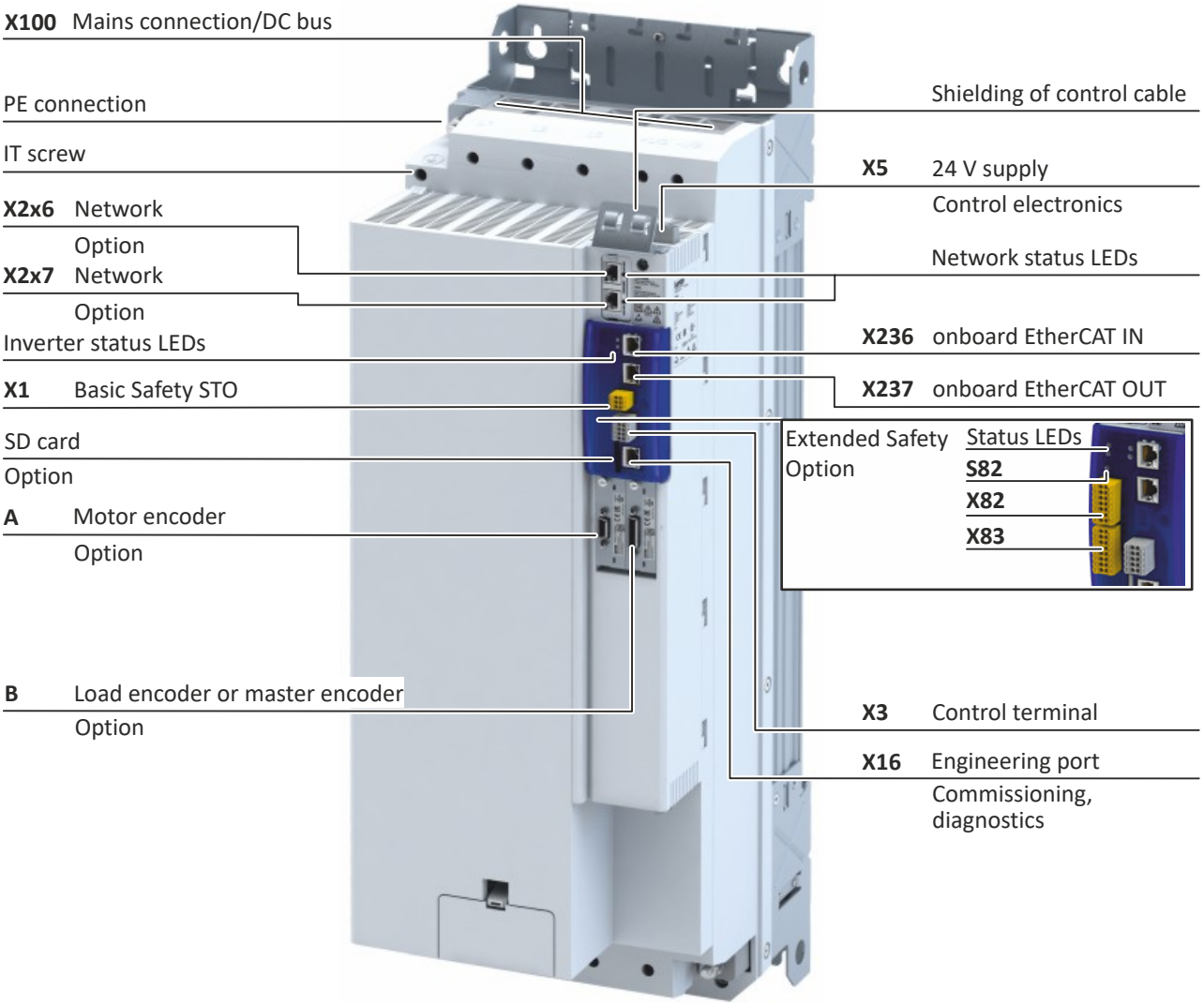

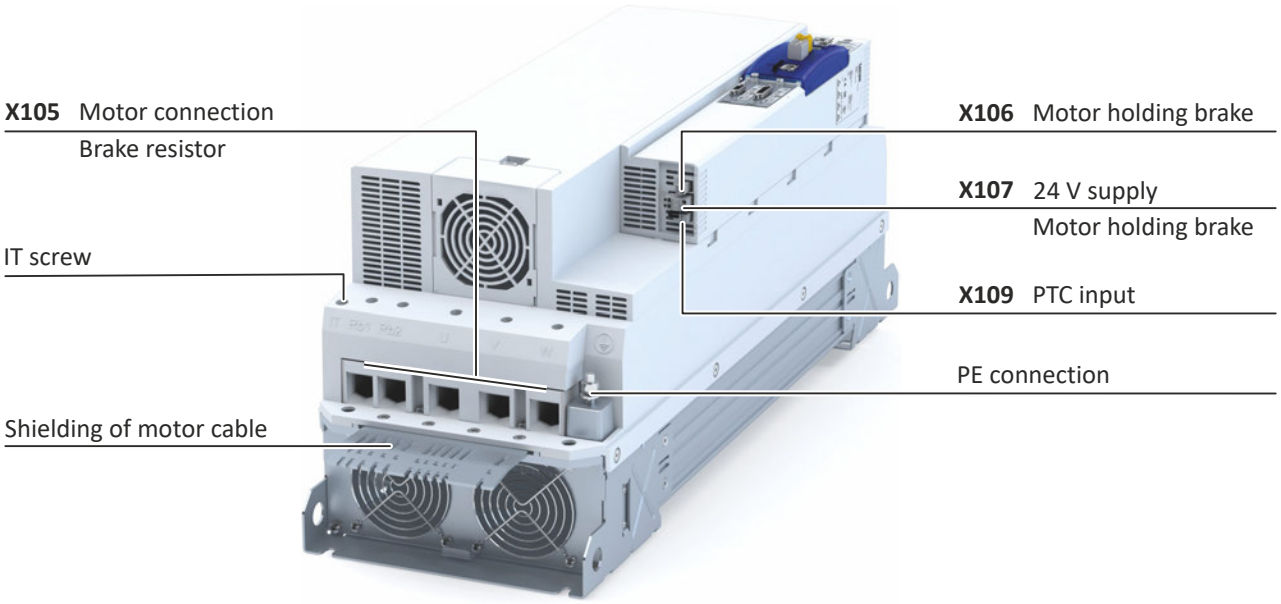

3.2 Identification of the products

3.2.1 Product codes

			I	**9**	**5**	**A**	**E**	□□□	□	**1**	□	□	□	□	□	□	□	□
Product type		Inverter	I															
Product family		i900		9														
Product		i950			5													
Product generation		Generation 1				A												
Mounting type		Control cabinet mounting					E											
Rated power (Examples)		0.55 kW						155										
		4.0 kW						240										
		30 kW						330										
		110 kW						411										
Mains voltage and connection type		3/PE AC 230/240 V							C									
		1/N/PE AC 230/240 V 3/PE AC 230/240 V							D									
		3/PE AC 400 V 3/PE AC 480 V							F									
Motor connections		Single axis								1								
Integrated functional safety		Basic Safety - STO									A							
		Extended Safety									C							
Protection class		IP20										0						
		IP20, coated										V						
Interference suppression		Without											0					
		Integrated RFI filter											1					
Design types	Dual Use	Not subject to export authorization: 0, 1, A, W												□				
		Subject to export authorization: 7, 8, E, V												□				
	SD card	Without SD card													Z			
		0 Application Credit													0			
		50 Application Credit													1			
		100 Application Credit													2			
		150 Application Credit													3			
		200 Application Credit													4			
		300 Application Credit													5			
		400 Application Credit													6			
	Load encoder (slot B)	Blanking cover, without load encoder														0		
		Resolver														2		
		Encoder (SinCos/HIPERFACE®/SSI/TTL)														3		
	Motor encoder (slot A)	Blanking cover, without motor encoder															0	
		Resolver															2	
		Encoder (SinCos/HIPERFACE®/SSI/TTL)															3	
		Blanking cover, One Cable Technology (OCT)															Q	
	Networks	Without network																0
		PROFINET																R
		EtherCAT																T
		Ethernet/IP																G
		CANopen																C

3.2.2 Nameplates

Position and meaning of the nameplates

Complete inverter		Component (options)	
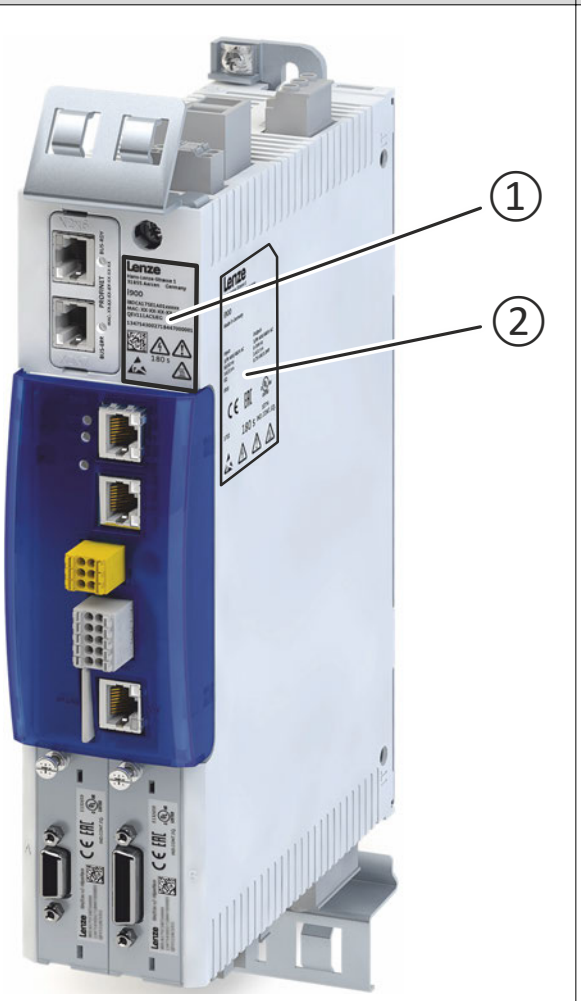		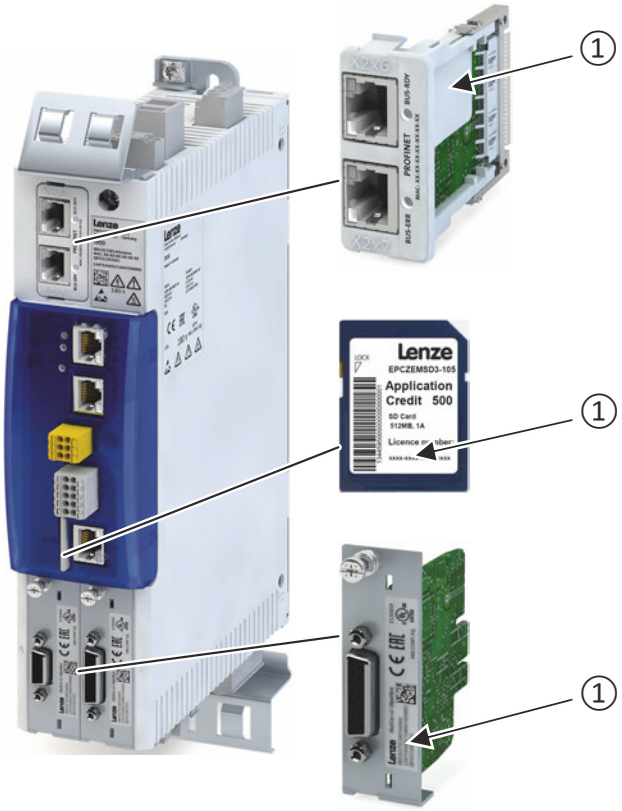	
①	Nameplate at front top: Technical data, type and serial number of the inverter	①	Type and serial number of the component
②	Nameplate at the side: Technical data of the inverter	-	-

3.3 License information

Open Source

Lenze software may contain software components that are licensed as Free Software or Open Source. The licensing terms of the open source software components used in this product are stored in the product.

The license terms of the open source software components are available as of firmware 1.3.5.1185.

Display licence information

1. Connect product to PC via Ethernet.
2. Read out IP address of the product via »EASY Starter« engineering tool.
3. Open browser and enter **http://"IP address of the product"/index.html**.

The licences used are displayed in the browser.

PROFINET

The PROFINET firmware is optional.

The PROFINET firmware uses the following open source software packages under a modified GPL license: eCos Operating System. These components are used at the operating system level of the firmware. The protocol stack does not use source code under a GPL license.

View license: http://ecos.sourceware.org/license-overview.html

4 Commissioning

The purpose of commissioning is to adapt the inverter as part of a machine with a variable-speed drive system to its drive task.

4.1 Important notes

⚠ DANGER!

Incorrect wiring can cause unexpected states during the commissioning phase.

Possible consequences: death, severe injuries or damage to property

Ensure the following before switching on the mains voltage:

► Wiring must be complete and correct.
► Wiring must be free of short circuits and earth faults.
► The motor circuit configuration (star/delta) must be adapted to the inverter output voltage.
► The motor must be connected in-phase (direction of rotation).
► The "emergency switching off" function of the overall system must operate correctly.

⚠ DANGER!

Incorrect settings during commissioning may cause unexpected and dangerous motor and system movements.

Possible consequences: death, severe injuries or damage to property

► Clear hazardous area.
► Observe safety instructions and safety clearances.

NOTICE

The set mains voltage is lower than the actual mains voltage.

Possible consequences: Destruction of a connected brake resistor.

Due to the mains voltage being set too low, the voltage threshold for braking operation ("brake chopper threshold") is within the permissible range of the DC-bus voltage. As a result, the brake chopper is continuously in operation and the brake resistor is thermally overloaded.

► First switch on the 24 V supply and check whether the setting of the mains voltage corresponds to the supply network: ▸ 0x2540:001 (Rated mains voltage).
► If it is ensured that the mains voltage is set correctly, the mains voltage can be switched on.

4.2 Operating interfaces

Depending on the inverter, there are one or several options for accessing the device parameters that are available for customizing the drive task.

Simple access to the device parameters is provided by the Lenze Engineering Tool »EASY Starter«. Connection **X16** is used as an interface for an engineering PC in this case.

Alternatively, the inverter can also be accessed via the optional "PROFINET" network options with the X256 or X257 connections, or EtherNet/IP with the X266 or X267 connections.

4.2.1 Engineering tool »EASY Starter«

The »EASY Starter« is a PC software that is especially designed for the commissioning and diagnostics of the inverter.

- »EASY Starter« Download

Sample screenshot:

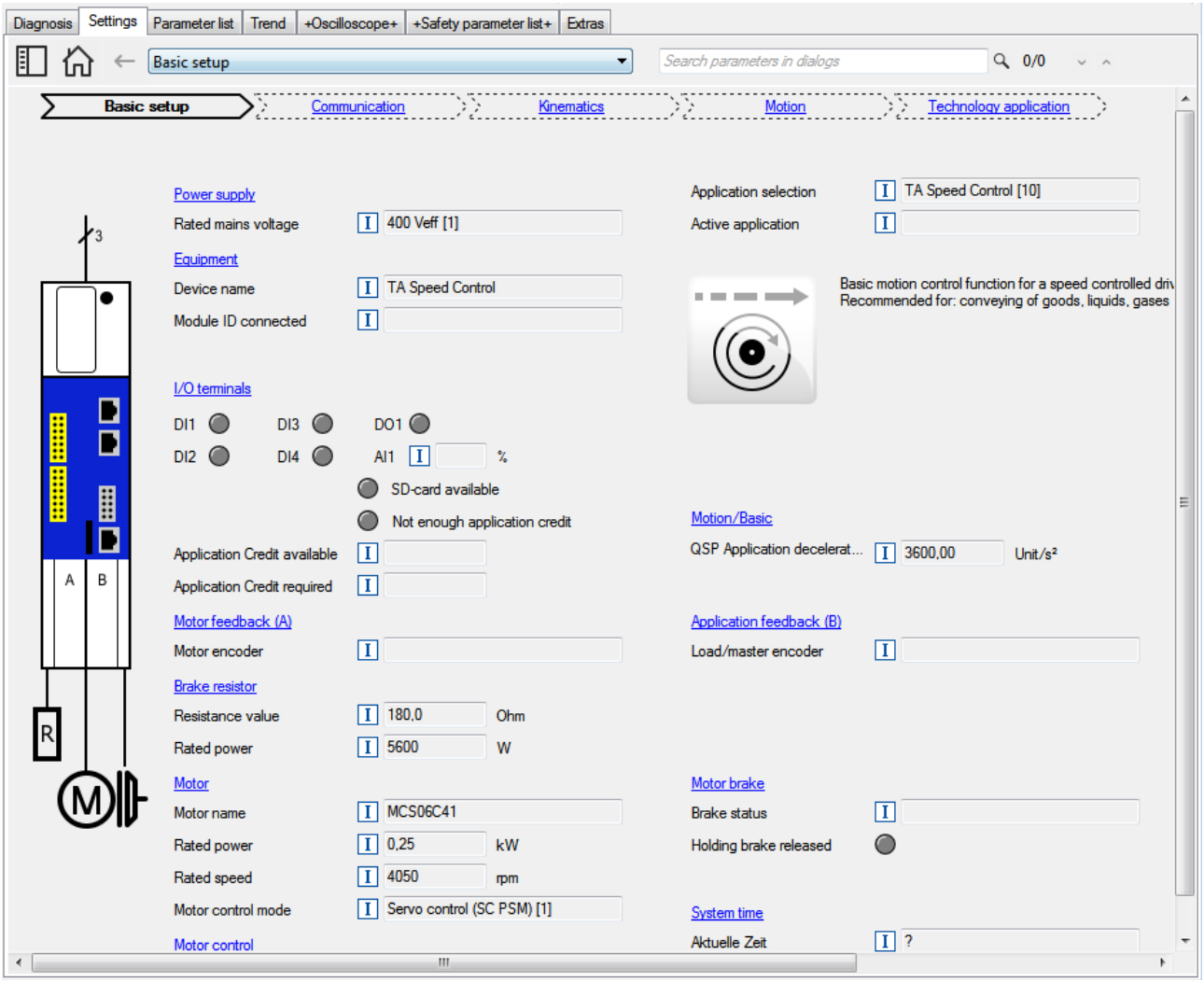

The five main commissioning steps are shown in order towards the top of the **Settings** tab. Clicking on a link displays a corresponding interface containing the most important parameters that need to be set.

Commissioning step	Description of the settings
Basic setting	Settings for adjusting the inverter to a simple application based on the default settings.
Communication	Settings for communication via the on-board EtherCAT, another network option, and the engineering port X16 (PC interface).
Kinematics	Basic settings of the technology application for adjusting the motor end and load side (gearbox ratio, mounting direction, moments of inertia, etc.)
Motion	Basic settings of the technology application for adjusting the motion control.
Technology application	Settings for adjusting the technology application for the application.

Parameter fields

- The parameters are sorted thematically.
- The currently set parameter values are displayed.
- Fields highlighted in yellow indicate an online connection to the device.
- Pressing the [F1] key opens the program help.

4.2.1.1 Generate a connection between inverter and »EASY Starter«

For commissioning the inverter with the »EASY Starter«, a communication link with the inverter is required. This can be established in a wired manner only.

How to establish a communication link via the X16 engineering port to the inverter:

Preconditions

- The inverter is ready for operation (mains voltage is switched on).
- No errors or faults.

Required accessories

- Engineering PC with installed »EASY Starter«
- Standard network cable

1. Insert the network cable into engineering port **X16** of the inverter.
2. Use the network cable to connect the inverter to the PC on which »EASY Starter« is installed.
3. Open the »EASY Starter« Start.
   The "Add devices" dialog is shown.
4. Select the "Ethernet" connection.
5. Press the **Insert** button.

The »EASY Starter« searches the selected communication path for connected devices.
Following successful connection, the inverter is shown in the device list.
The »EASY Starter« tabs then provide access to the inverter parameters.

Additional information on network configuration: ▸ Configure engineering port 📖 304

Further information on how to create a communication link via "PROFINET":
▸ PROFINET 📖 431

4.2.2 Engineering tool »PLC Designer«

The "PLC Designer" is a PC software for program creation and commissioning of Lenze PLC devices according to IEC 61131-3.

In addition, the "PLC Designer" offers 6 editors, debugger, monitoring and other features.

- »PLC Designer«Download

4.3 General information on parameter setting

Certain device commands or settings which might cause a critical state of the drive behavior can only be carried out when the device is disabled.

4.3.1 Addressing of the parameters

Each parameter features a 16-bit index as its address. Under this address, the parameter is stored in the object directory of the device.

- Parameters that belong together functionally are combined in a data set. These parameters are additionally provided with an 8-bit subindex.
- The colon is used as a separator between the index and subindex Example: "0x2540:001"
- There are parameter settings that can be changed, and (diagnostic) parameters that can only be read.

The following conventions are used in this documentation for specifying the parameter address:

- The index is specified as a hexadecimal value.
- The subindex is specified as a decimal value.

4.3.2 Structure of the parameter descriptions

- The parameter descriptions in this documentation are structured in table form.
- The representation distinguishes parameters with a setting range, text, selection list, and bit-coded display.
- The default setting of parameters with a write access feature is shown in **bold**.

Example: parameters with a setting range

Address	Name / setting range / [default setting]	Information
Index:Subindex	Parameter designation Minimum value ... [**default setting**] ... maximum value • Optional information with regard to the parameter.	Explanations & notes with regard to the parameter.

Example: parameters with a selection list

Address	Name / setting range / [default setting]		Information
Index:Subindex	Parameter designation • Optional information with regard to the parameter.		Explanations & notes with regard to the parameter. **Note:** The corresponding selection number (here 0, 1, or 2) must be set. Other values are not permissible.
	0	**Designation of selection 0**	Optionally: Explanations & notes with regard to the corresponding selection. The default selection is shown in **bold**.
	1	Designation of selection 1	
	2	Designation of selection 2	

Example with bit coded display

Address	Name / setting range / [default setting]		Information
Index:Subindex	Parameter designation • Optional information with regard to the parameter.		Explanations & notes with regard to the parameter.
	Bit 0	Designation of bit 0	Optionally: Explanations & notes with regard to the corresponding bit.
	Bit 1	Designation of bit 1	
	Bit 2	Designation of bit 2	
	...	...	
	Bit 15	Designation of bit 15	

4.3.3 Setting and transferring safety parameters

Safety-relevant parameters only have to be set for devices that feature integrated safety engineering or safety modules.

Observe the **online help information on the safety parameter list**.

In »EASY Starter« and »PLC Designer«, safety parameters can only be set and transferred using the **safety parameter list**. When a device featuring integrated safety engineering or a safety module is selected in the device list, the **safety parameter list** becomes available in the form of an additional tab.

Safe parameter setting

When using online communication via a bus system, several users can access the same drive simultaneously and process the safe parameter set. After transferring the safe parameters, check the checksums (CRC) in the **safety parameter list** dialog. The checksums of the project must correspond to the checksums of the safety option.

The consistency of the safe parameters must be ensured by organisational measures because there are no technical means to avoid multiple users accessing parameter sets at the same time.

Parameter setting

Safety-relevant parameters can only be transmitted to the safety option by safe parameter setting. The parameter set is saved on the SD card and and in the safety option with a unique safety address.

Safe parameter setting can only be performed in the service status. The service status means:

- Stop is active and the drive is switched to torqueless operation (STO).
- Communication via the safety bus is active but passivated.

The service status can be activated using the »Easy Starter«. Initializing the safety option serves to deactivate the service status.

The service status is activated when a deviation is detected in the safe parameter set on the safety option.

Parameter setting using the Easy Starter

From »Easy Starter« version 01.11 onwards, a safe parameter setting is supported. The functions of the **Safety parameter list** are documented in the online help.

Password

To save a safe parameter set, a password is required. The preset password is "Lenze Safety". The password can be changed and must have at least six characters.

The command **Reset safe parameter set in the device** serves to delete the safe parameter set. The safety functions must be re-parameterized after the reset. The password is reset to the preset password "Lenze Safety".

Acknowledge parameter set or safety address

▸ LED indication for requested acknowledgement 📖 557

Parameter sets and axes

The unambiguousness of an axis with safety functions in a drive system can be achieved by means of the safety address. When a safety option is initialized, e.g. when loading the safe parameter set, the compliance of the safety address will be checked. If no compliance exists, an initialization error is reported.

Clearly define the safety address in a drive system or plant.

Document the address in circuit diagrams and labels.

In drive systems with an activated safety bus, the safety address is also used as the safety bus target address. The clear assignment of the safety address must be configured in the safety PLC.

In drive systems without activated safety bus, unambiguousness and correct assignment of the safety address must be checked. For this purpose, use the »Easy Starter« or the »PLC Designer«.

4.3.4 Parameter overview lists

Parameter attribute list: contains a list of all inverter parameters. This list in particular includes some information that is relevant for the reading and writing of parameters via the network.
📖 710

4.3.5 Favorites

In order to gain quick access using the »EASY Starter«, frequently used parameters of the inverter can be defined as "Favorites".

- »EASY Starter« provides quick access to the "Favorites" via the *Favorites* tab.

4.3.5.1 Configuring the "Favorites"

The "Favorites" can be configured by the user.

Details

A maximum number of 50 parameters can be defined as "Favorites".

The easiest way to process the selection of the favorites is via the parameterisation dialog in the »EASY Starter«:

1. Change to the "Parameter list" tab.
2. Select group 0 - Favorites.
3. Click the button.
4. Process favorites:

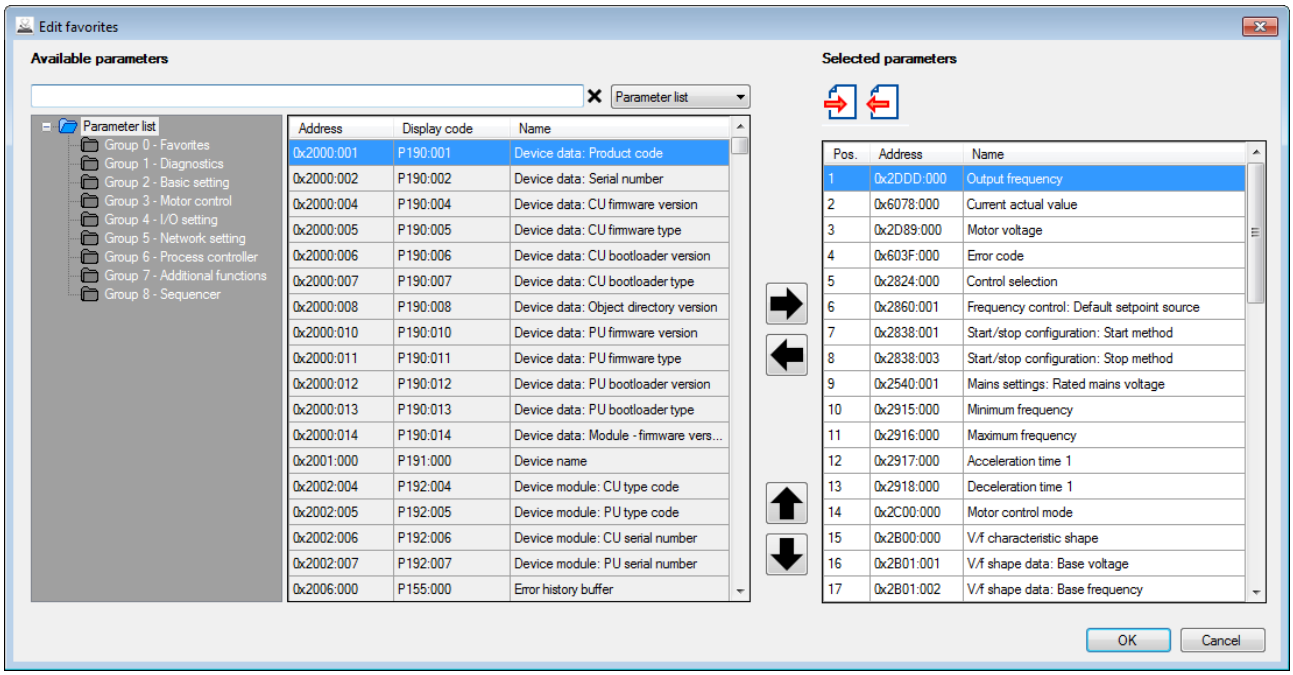

Default favorites can be changed via network using the following parameters:

Parameter

Address	Name / setting range / [default setting]	Information
0x261C:001	Favorites settings: Parameter 1 0 ... [] ... 4294967295	Definition of the "Favorites" parameters. • Format: 0xiiiiss00 (iiii = hexadecimal index, ss = hexadecimal subindex) • The lowest byte is always 0x00. • The keypad can be used to select the desired parameter from a list.
0x261C:002	Favorites settings: Parameter 2 0 ... [] ... 4294967295	
0x261C:003	Favorites settings: Parameter 3 0 ... [] ... 4294967295	
0x261C:004	Favorites settings: Parameter 4 0 ... [] ... 4294967295	
0x261C:005	Favorites settings: Parameter 5 0 ... [] ... 4294967295	
0x261C:006	Favorites settings: Parameter 6 0 ... [] ... 4294967295	
0x261C:007	Favorites settings: Parameter 7 0 ... [] ... 4294967295	
0x261C:008	Favorites settings: Parameter 8 0 ... [] ... 4294967295	
0x261C:009	Favorites settings: Parameter 9 0 ... [] ... 4294967295	

Address	Name / setting range / [default setting]	Information
0x261C:010	Favorites settings: Parameter 10 0 ... [] ... 4294967295	
0x261C:011	Favorites settings: Parameter 11 0 ... [] ... 4294967295	
0x261C:012	Favorites settings: Parameter 12 0 ... [] ... 4294967295	
0x261C:013	Favorites settings: Parameter 13 0 ... [] ... 4294967295	
0x261C:014	Favorites settings: Parameter 14 0 ... [] ... 4294967295	
0x261C:015	Favorites settings: Parameter 15 0 ... [] ... 4294967295	
0x261C:016	Favorites settings: Parameter 16 0 ... [] ... 4294967295	
0x261C:017	Favorites settings: Parameter 17 0 ... [] ... 4294967295	
0x261C:018	Favorites settings: Parameter 18 0 ... [] ... 4294967295	
0x261C:019	Favorites settings: Parameter 19 0 ... [] ... 4294967295	
0x261C:020	Favorites settings: Parameter 20 0 ... [] ... 4294967295	
0x261C:021	Favorites settings: Parameter 21 0 ... [] ... 4294967295	
0x261C:022	Favorites settings: Parameter 22 0 ... [] ... 4294967295	
0x261C:023	Favorites settings: Parameter 23 0 ... [] ... 4294967295	
0x261C:024	Favorites settings: Parameter 24 0 ... [] ... 4294967295	
0x261C:025	Favorites settings: Parameter 25 0 ... [] ... 4294967295	
0x261C:026	Favorites settings: Parameter 26 0 ... [] ... 4294967295	
0x261C:027	Favorites settings: Parameter 27 0 ... [] ... 4294967295	
0x261C:028	Favorites settings: Parameter 28 0 ... [] ... 4294967295	
0x261C:029	Favorites settings: Parameter 29 0 ... [] ... 4294967295	
0x261C:030	Favorites settings: Parameter 30 0 ... [] ... 4294967295	
0x261C:031	Favorites settings: Parameter 31 0 ... [] ... 4294967295	
0x261C:032	Favorites settings: Parameter 32 0 ... [] ... 4294967295	
0x261C:033	Favorites settings: Parameter 33 0 ... [] ... 4294967295	
0x261C:034	Favorites settings: Parameter 34 0 ... [] ... 4294967295	
0x261C:035	Favorites settings: Parameter 35 0 ... [] ... 4294967295	
0x261C:036	Favorites settings: Parameter 36 0 ... [] ... 4294967295	
0x261C:037	Favorites settings: Parameter 37 0 ... [] ... 4294967295	
0x261C:038	Favorites settings: Parameter 38 0 ... [] ... 4294967295	
0x261C:039	Favorites settings: Parameter 39 0 ... [] ... 4294967295	

Address	Name / setting range / [default setting]	Information
0x261C:040	Favorites settings: Parameter 40 0 ... [] ... 4294967295	
0x261C:041	Favorites settings: Parameter 41 0 ... [] ... 4294967295	
0x261C:042	Favorites settings: Parameter 42 0 ... [] ... 4294967295	
0x261C:043	Favorites settings: Parameter 43 0 ... [] ... 4294967295	
0x261C:044	Favorites settings: Parameter 44 0 ... [] ... 4294967295	
0x261C:045	Favorites settings: Parameter 45 0 ... [] ... 4294967295	
0x261C:046	Favorites settings: Parameter 46 0 ... [] ... 4294967295	
0x261C:047	Favorites settings: Parameter 47 0 ... [] ... 4294967295	
0x261C:048	Favorites settings: Parameter 48 0 ... [] ... 4294967295	
0x261C:049	Favorites settings: Parameter 49 0 ... [] ... 4294967295	
0x261C:050	Favorites settings: Parameter 50 0 ... [] ... 4294967295	

4.4 Commissioning steps

Preconditions

- The mechanical and electrical installation of the inverter is complete.
- If necessary, the motor is mechanically decoupled from the system.
  - Check whether the system can be mechanically damaged if the non-decoupled drive makes uncontrolled movements.
- Check whether the mains voltage and motor data settings correspond to the actual conditions.
  - Supply the inverter with 24 V.
  - Check mains voltage setting: ▸ Mains voltage 41
  - Check motor data settings: ▸ Motor data 43
  - If it has been ensured that the mains voltage and motor data settings correspond to the actual conditions, the mains voltage can be connected.
- The connection between the inverter and the engineering PC with installed »EASY Starter« has been established.
- The »EASY Starter« is open and connected to the inverter.
- The device list of the »EASY Starter« contains the inverter with the correct device description.
  - For an explanation of where the device list can be found, please consult the online help of the »EASY Starter«. Press the **F1** key to call up the online help.
- No fault is indicated by the inverter diagnostics.
  - Check the LED status displays. LED status display 561
  - Check the error messages. Logbook 562
  - Check available application credit on the storage medium.

4.5 Saving the parameter settings

Use the "Save user data" device command to save the parameter settings of the controller locally on the SD card of the device.

During operation with the CiA 402 device profile (Parameter 0x4000 = CiA [0]), no settings are saved. The settings are transmitted when the master control is started. If applications are used, the SD card with the license data also serves as storage medium.

The active application is displayed in the parameter. ▸ 0x2013:001

The application can be modified via the parameter. ▸ 0x4000

4.5.1 Save parameter settings with »EASY Starter«

If a parameter setting has been changed with the »EASY Starter« but not yet saved in the memory medium with mains failure protection, the status line of the »EASY Starter« displays the note "The parameter set was changed".

There are 3 options to save the parameter settings in the user memory of the storage medium:

- Click the button in the toolbar of the »EASY Starter« .
- Press the function key **F6**.
- Execute the device command "Save user data": 0x2022:003 = "On / start [1]".

5 Basic setting

This chapter contains the most frequently used functions and settings to adapt the inverter to a simple application based on the default setting.

5.1 Technology Application

In the "Technology application" dialogue of the »EASY Starter« software, the parameter **Application selection** shows which technology application is active. The technology application can be modified in this dialogue. ▸ 0x4000

Parameter

Address	Name / setting range / [default setting]		Information
0x4000	Application selection • Setting can only be changed if the inverter is disabled.		
	0	CiA 402	
	1	"CiA 402 advanced" technology application	
	5	"AC Drive Profile" technology application	
	10	**"Speed Control" technology application**	
	20	"Table Positioning" technology application	
	40	"Electronic Gearbox" technology application	
	41	"Sync and Correction" technology application	
	50	"Winder Dancer" technology application	
	51	"Winder Tension" technology application	
	10000	"User" technology application	
0x2824	Control via PDO/Application • Setting can only be changed if the inverter is disabled.		Selection of how the inverter is controlled.
	0	Off	Control via PDO/application is switched off. The inverter can only be controlled via SDO.
	1	**On**	The inverter is controlled via PDO/application.

5.2 Device name

Parameter

Address	Name / setting range / [default setting]	Information
0x2001	Device name ["**Device**"]	Any device name can be set in this object for the purpose of device identification.

5.3 Mains voltage

The rated mains voltage set for the inverter has an impact on the operating range of the inverter.

Setting-up operation

For setup, the inverter can be operated with 15 V ... 60 V DC voltage.

- Setting: ▸ 0x2540:001 = [4] 60 V DC (setting-up operation).
- Supply via DC terminal X101 (+UG/-UG).

Details

By default, the rated mains voltage is set according to the product code of the inverter.

The set rated mains voltage determines the values for fixed monitoring thresholds:

- The error threshold and reset threshold for monitoring the DC-bus voltage
- The voltage threshold for braking operation ("brake chopper threshold").

Inverter		Rated mains voltage 0x2540:001	
Product code 0x2000:001	**Mains connection**	**Default setting**	**Required setting**
i95xxxxxDxxxxxxxxx	230 V, 1/3-phase	230 Veff [0]	230 Veff [0]
i95xxxxxCxxxxxxxxx	230 V, 3-phase	230 Veff [0]	230 Veff [0]
i95xxxxxFxxxxxxxxx	400 V, 3-phase	400 Veff [1]	400 Veff [1]
	480 V, 3-phase		480 Veff [2]

Check the setting of the rated mains voltage in 0x2540:001.

Make sure that this fits the supply network!

If the inverter is reset to the factory settings, the rated mains voltage is also reset to the default setting!

Voltage thresholds for monitoring the DC-bus voltage

- The warning thresholds for monitoring are adjustable.
- The error thresholds and reset thresholds for monitoring result from the rated mains voltage set.

Rated mains voltage	Undervoltage thresholds			Overvoltage thresholds		
	Warning threshold	**Error threshold**	**Reset threshold**	**Warning threshold**	**Error threshold**	**Reset threshold**
Setting in 0x2540:001	Setting in 0x2540:002	Display in 0x2540:003	Display in 0x2540:004	Setting in 0x2540:005	Display in 0x2540:006	Display in 0x2540:007

Parameter

Address	Name / setting range / [default setting]	Information
0x2540:001	Mains settings: Rated mains voltage	Selection of the mains voltage for actuating the inverter.
	0 230 Veff	
	1 400 Veff	
	2 480 Veff	
	4 60 V DC (setting-up operation)	
	10 230 Veff/reduced LU level	
	11 400 Veff/reduced LU level	
	12 480 Veff/reduced LU level	
0x2540:002	Mains settings: Undervoltage warning threshold 0 ... [**430**] ... 800 V	Monitoring for undervoltage (LU) in the DC bus: Setting of the warning threshold. • If the DC voltage in the DC bus falls below the threshold set, the inverter outputs a warning. • The warning is reset with a hysteresis of 10 V.
0x2540:003	Mains settings: Undervoltage error threshold • Read only: x V	Monitoring for undervoltage (LU) in the DC bus: Display of the fixed threshold. • If the DC voltage in the DC bus falls below the threshold displayed, the error"" response is triggered.
0x2540:004	Mains settings: Undervoltage reset threshold • Read only: x V	Display of the fixed reset threshold for monitoring DC bus undervoltage.

Address	Name / setting range / [default setting]	Information
0x2540:005	Mains settings: Overvoltage warning threshold 0 ... [**795**] ... 800 V	Monitoring for overvoltage (OU) in the DC bus: Setting of the warning threshold. • If the DC bus voltage exceeds the threshold set, the inverter outputs a warning. • The warning is reset with a hysteresis of 10 V.
0x2540:006	Mains settings: Overvoltage error threshold • Read only: x V	Monitoring for overvoltage (OU) in the DC bus: Display of the fixed threshold. • If the DC-bus voltage exceeds the threshold displayed, the "Fault" response is triggered.
0x2540:007	Mains settings: Overvoltage reset threshold • Read only: x V	Display of the fixed reset threshold for monitoring DC bus overvoltage.
0x2540:008	Mains settings: DC link voltage critical • Read only	Display of value "1": the DC-bus voltage has reached a critical value.

5.4 Function assignment of the inputs and outputs (default setting)

"I/O extensions and control connections" describes the assignment of functions to inputs and outputs. 📖 297

5.5 Motor data

The term "motor data" comprises all parameters only depending on the motor and only characterising the electrical behaviour of the motor. Motor data are independent of the application in which the inverter and the motor are used.

Preconditions

The equivalent circuit data ("Settings" tab, path: "Basic setting\motor", parameterisation dialog "Derived motor properties and equivalent circuit") apply to a motor in star connection. In case of a motor in delta connection, the delta values must be converted into equivalent star values.

Possible settings

If a Lenze motor is connected to the inverter, you can select the motor in the engineering tool from the "motor catalogue".

- For details see chapter "Select motor from motor catalog". 📖 44

Otherwise the motor data must be set manually (for details see chapter "Manual setting of the motor data“). 📖 46

Parameter

Address	Name / setting range / [default setting]		Information
0x2C08	Method for setting motor parameters		Representation of the method selected for setting the motor parameters. (Is used by the engineering tools.)
	1	**Select from catalogue (Lenze motors)**	
	2	Enter motor nameplate data (other motors)	
	3	Manual input (other motors)	
	4	Identification run (all motors)	

5.5.1 Select motor from motor catalog

The following describes how to parameterise your drive system by selecting a Lenze motor from the motor catalogue. Several processes are started invisibly in the background to load/ calculate the settings for the relevant parameters.

Preconditions

- Access to a Lenze engineering tool (e. g. »EASY Starter«).
- Parameters can be set online or offline (with or without connected motor).

Required steps

1. Open the Lenze engineering tool that provides for the functionality of a “Motor catalog".
2. Click the **Select motor...** button. In case of the »EASY Starter«, you find the **Select motor...** button on the "settings". tab.
3. Select the motor used in the "Select motor" dialog:

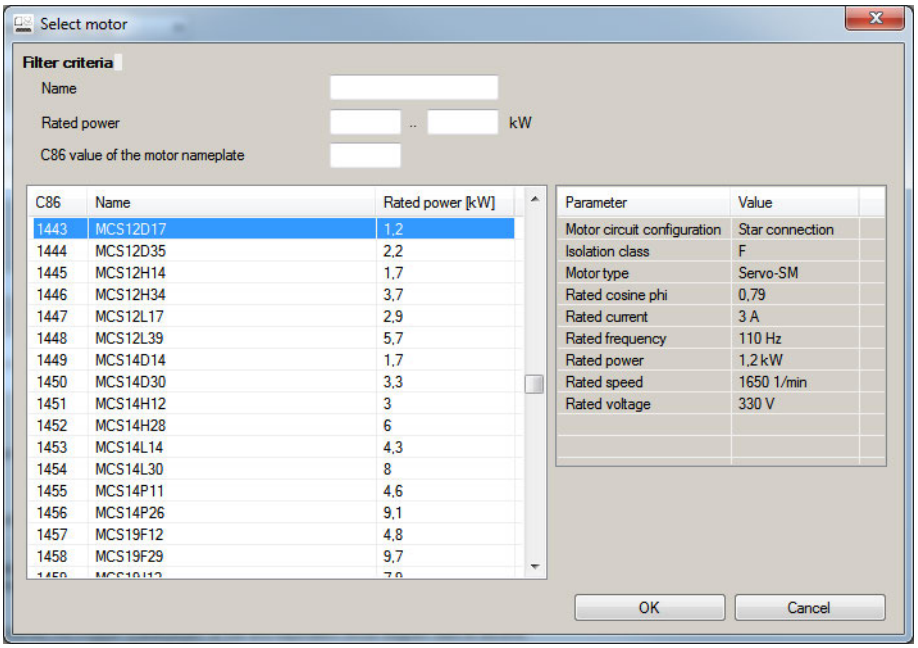

By entering filter criteria, you can restrict the selection.

Name (e. g. "MCS..."), rated power and C86 value can be found on the motor nameplate.

4. Press the **Please select** button to select the thermal sensor.

   This is not required for all motors. For older motors, such as MDSKA056-22 (C86=10), a thermal sensor **CANNOT** be selected.

Observe the notes on the **?** button.

5. Click the **OK** button to start the optimisation.

Parameterisation sequence

As soon as the parameterisation has been started, the following steps are initiated by the engineering tool:

1. The motor rating data and the motor equivalent circuit diagram data are loaded from the motor catalogue.
2. The motor controller settings and the speed controller settings are automatically calculated based on the previously loaded data.

Notes:

- The data involved in this parameterisation are provided be the motor catalog alone. Further user data is not required.
- The inverter characteristic is not changed by this optimisation.

Parameter

Address	Name / setting range / [default setting]	Information
0x2C01:010	Motor parameters: Motor name ["**MCS06C41**"]	The name (e.g. " 1") can be freely selected by the user. If the motor in the engineering tool has been selected from the "motor catalog", the respective motor name is automatically entered here (example: "MDSKA080-22, 70").

5.5.2 Manual setting of the motor data

There are two options to parameterize a motor.

1. Enter nameplate data

Enter the following motor data:

- 0x2C01:001Number of pole pairs
- 0x2C01:002Stator resistance
- 0x2C01:003Stator leakage inductance
- 0x2C01:004 Rated speed
- 0x2C01:005Rated frequency
- 0x2C01:006Rated power
- 0x2C01:007Rated voltage
- 0x2C01:008Cosine phi
- 0x2C01:009Insulation class
- 0x6075Rated motor current

When you touch the "Estimate" button in the engineering tool, more parameters depending on the motor are shown.

2. Enter data of the motor data sheet

The motor data and the parameters depending on the motor are entered. The parameters mentioned under 1. are the following:

- 0x2D4C:001 Thermal time constant of the winding
- 0x2D4C:002 Thermal time constant - laminated core
- 0x2D4C:003 Influence of winding
- 0x2D4C:004 Starting value
- 0x6076Rated motor torque

Additionally for ASM:

- 0x2C02:001Rotor resistance
- 0x2C02:002Mutual inductance
- 0x2C02:003Magnetizing current

Additionally for PSM:

- 0x2C03:001 EMF constant
- 0x2C03:002 Resolver pole position
- 0x2C03:003Temperature coefficient magnets (kTN)
- 0x2C03:004Encoder pole position

After the motor data has been parameterized via one of the two options, the following monitoring and limit values are initialized with motor-dependent preset values by touching the "Initialize" button:

- 0x2D44:001 Overspeed monitoring threshold
- 0x2D46:001 Overcurrent monitoring threshold
- 0x2D49:003 Motor temperature monitoring warning threshold
- 0x2D49:004 Motor temperature monitoring error threshold
- 0x6073 Maximum current
- 0x6075Rated motor current

Parameter

Address	Name / setting range / [default setting]		Information
0x2822:037	Axis commands: Estimate all motor parameters based on rated data		
	0	**Off/Ready**	
	1	On/Start	
	2	In progress	
	3	Action cancelled	
	4	No access	
	5	No access (controller inhibit)	
0x2822:038	Axis commands: HIPERFACE (A): Set position with synchronization		
	0	**Off/Ready**	
	1	On/Start	
	2	In progress	
	3	Action cancelled	
	4	No access	
	5	No access (controller inhibit)	
0x2822:039	Axis commands: HIPERFACE (A): Set position with synchronization		
	0	**Off/Ready**	
	1	On/Start	
	2	In progress	
	3	Action cancelled	
	4	No access	
	5	No access (controller inhibit)	
0x2C01:001	Motor parameters: Number of pole pairs • Read only		Display of the number of pole pairs calculated from the rated speed and rated frequency.
0x2C01:002	Motor parameters: Stator resistance 0.0000 ... [**13.5000**] ... 125.0000 Ω		General motor data. Carry out settings as specified by manufacturer data/motor data sheet. Note! When you enter the motor nameplate data, take into account the phase connection implemented for the motor (star or delta connection). Only enter the data applying to the connection type selected.
0x2C01:003	Motor parameters: Stator leakage inductance 0.000 ... [**51.000**] ... 500.000 mH		
0x2C01:004	Motor parameters: Rated speed 0 ... [**4050**] ... 50000 rpm		General motor data. Carry out settings as specified by motor nameplate data. Note! When you enter the motor nameplate data, take into account the phase connection implemented for the motor (star or delta connection). Only enter the data applying to the connection type selected.
0x2C01:005	Motor parameters: Rated frequency 0.0 ... [**270.0**] ... 1000.0 Hz		
0x2C01:006	Motor parameters: Rated power 0.00 ... [**0.25**] ... 655.35 kW		
0x2C01:007	Motor parameters: Rated voltage 0 ... [**225**] ... 65535 V		
0x2C01:008	Motor parameters: Cosine phi 0.00 ... [**0.80**] ... 1.00		
0x2C01:009	Motor parameters: Insulation class		Insulation class of the motor (see motor nameplate).
	0	Y (cut-off temperature = 90 °C)	
	1	A (cut-off temperature = 105 °C)	
	2	E (cut-off temperature = 120 °C)	
	3	B (cut-off temperature = 130 °C)	
	4	**F (cut-off temperature = 155 °C)**	
	5	H (cut-off temperature = 180 °C)	
	6	G (cut-off temperature > 180 °C)	
0x2C02:001	Motor parameter (ASM): Rotor resistance 0.0000 ... [**0.0000**] ... 214748.3647 Ω		Equivalent circuit data required for the motor model of the asynchronous machine.
0x2C02:002	Motor parameter (ASM): Mutual inductance 0.0 ... [**0.0**] ... 214748364.7 mH		
0x2C02:003	Motor parameter (ASM): Magnetising current 0.00 ... [**0.00**] ... 500.00 A		

Address	Name / setting range / [default setting]	Information
0x2C03:001	Motor parameter (PSM): Back EMF constant 0.0 ... [**41.8**] ... 100000.0 V/1000rpm	Voltage induced by the motor (rotor voltage / 1000 rpm). For permanently excited synchronous motors, the e.m.f. constant describes the r.m.s. value of the line-to-line voltage (phase voltage) induced in idle state by the motor (reference: 1000 rpm, 20 °C). Measured: Line to Line (L - L)
0x2C03:002	Motor parameter (PSM): Resolver pole position -179.9 ... [**-90.0**] ... 179.9 °	Equivalent circuit data required for the motor model of the synchronous machine.
0x2C03:003	Motor parameter (PSM): Magnets temperature coefficient (kTN) -1.000 ... [**-0.110**] ... 0.000 %/°C	
0x2C03:004	Motor parameter (PSM): Encoder pole position -179.9 ... [**0.0**] ... 179.9 °	
0x2D4C:001	Thermal model motor utilization (i²xt): Motor utilisation (i²xt) 1 ... [**60**] ... 36000 s	Setting of the time constant for the winding.
0x2D4C:002	Thermal model motor utilization (i²xt): Thermal time constant - laminations 1 ... [**852**] ... 36000 s	Setting of the time constant for the laminated core.
0x2D4C:003	Thermal model motor utilization (i²xt): Winding influence 0 ... [**27**] ... 100 %	Part of the thermal motor model: distribution factor of the copper winding influence.
0x6072	Max. torque 0.0 ... [**250.0**] ... 3276.7 %	• 100 % ≡ Rated motor torque 0x6076 • The torque limitation is both effective in the static and dynamic operating points. It is used, for instance, as overload protection of the mechanical transmission path/elements, starting from the motor shaft. • If a value is entered here that is higher than in 0x60E0 (Positive torque limit) and 0x60E1 (Negative torque limit), the torque is limited to the lowest value.
0x6073	Max. current 0.0 ... [**150.0**] ... 3276.7 %	Max. current of the inverter. • 100 % = Rated motor current (0x6075) • If the current consumption of the motor exceeds this current limit, the inverter changes its dynamic behaviour in order to counteract this exceedance. • If the modified dynamic behaviour fails to eliminate the excess current consumption, the inverter outputs an error. When 0x6078 (current actual value in %) exceeds 0x6073 (max. current actual value in %) the message 0x238A is displayed. This status is also displayed in the following network status word bits: • 0x400C:001 bit 14 • 0x400C:002 bit 2
0x6075	Rated motor current 0.001 ... [**1.300**] ... 500.000 A • Setting can only be changed if the inverter is disabled.	The rated motor current that needs to be set here serves as a reference value for different parameters that involve a setting for/display of a current value in percent. Example: • Rated motor current = 1.7 A • Max. current 0x6073 = 200 % Rated motor current = 3.4 A
0x6076	Rated motor torque 0.001 ... [**0.600**] ... 100000.000 Nm • Setting can only be changed if the inverter is disabled.	The rated motor torque to be set here serves as a reference value for different parameters with a setting/display of a torque value in percent. Example: • Rated motor torque = 1.65 Nm • Max. torque 0x6072 = 250 % Rated motor torque = 4.125 Nm
0x6080	Max. motor speed 0 ... [**6075**] ... 480000 rpm	Limitation of the max. motor speed. Depending on the parameter setting of 0x2D44:001 (Overspeed monitoring: threshold), the speed limitation (0x6080 / Max. motor speed) may become active before speed monitoring.

5.6 Motor control mode

The inverter supports different modes for closed-loop/open-loop motor control.

Parameter

Address	Name / setting range / [default setting]		Information
0x2C00	Motor control mode • Setting can only be changed if the inverter is disabled.		Selection of the motor control mode.
	1	**Servoregelung (SC-PSM)**	This control mode is used for servo control of a synchronous motor. ▸ Servo control for synchronous motor (SC-PSM) 📖 224 A motor encoder must be connected to the inverter. This motor encoder serves as a feedback system for engine control.
	2	Servo control (SC ASM)	This control mode is used for servo control of an asynchronous motor. A motor encoder must be connected to the inverter. This motor encoder is used as a feedback system for the motor control. ▸ Servo control for asynchronous motor (SC-ASM) 📖 225
	6	V/f characteristic control (VFC open loop)	This control mode is used for the speed control of an asynchronous motor via a V/f characteristic and is the simplest control mode. ▸ V/f characteristic control for asynchronous motor (VFC open loop) 📖 226

The detailed description of each motor control type can be found in the chapter "Configuring the motor control". 📖 223

Supplementary chapters:

- Chapter "Configure feedback system for motor control" describes how to set resolvers or sine/cosine encoders as motor feedback. 📖 170
- Chapter "Second feedback system for the techology application" describes how a higher-level control loop can be used as an actual value feedback application for higher accuracy. 📖 188

6 Technology application (TA) basic settings

This chapter describes the basic functions of the technology application.

Here you will find information on the following topics:

- Interface selection 📖 51
- Kinematic settings 📖 52
- Motion settings 📖 59
- Defining control sources 📖 89
- System bus communication 📖 92
- Monitoring 📖 99

6.1 Interface selection

The selection of the interface determines whether the technology application is controlled via the fieldbus network or via the system bus.

Depending on the selection, the status signals are also output to the fieldbus network or to the system bus.

There are 8 control words and 8 status words with a data width of 32 bits per word available. Their assignment depends on the selected technology application.

This selection only switches the 8 control words and 8 status words.

Details

How to select the interface in the »EASY Starter«:

1. Select the **Settings** tab.
2. Select the **technology application** parameter dialog.
3. Select the desired interface. ▸ 0x4001

To change the parameter, the inverter must be disabled. ▸ Disable operation 🕮 317

The source for the 8 control words and the destination for the 8 status words are now set.

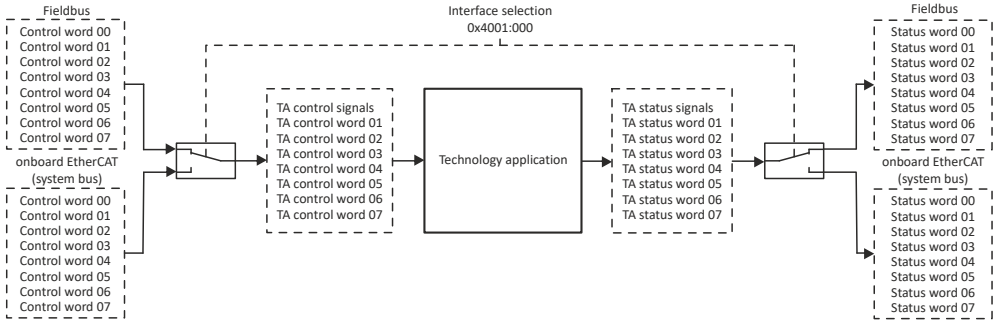

Fig. 1: Principle of interface switching

For test purposes, you can simulate control words and status words manually.

▸ Simulation of the interface 🕮 105

Parameter

Address	Name / setting range / [default setting]		Information
0x4001	Interface selection		Selecting the interface determines the interface that receives the signals.
	0	**Fieldbus network**	Control of the application via the fieldbus.
	1	Onboard EtherCAT	Activation of the application via the system bus.

6.2 Kinematic settings

The kinematic parameters describe, among other things, the motor end with regard to the mechanics used:

- Mass inertia (load/motor) 52
- Torque feedforward control 52
- Motor/encoder mounting direction 52
- Motor/encoder gearbox ratio 53
- Motor/encoder feed constant 55
- Motor/encoder travel ranges and cycle length 56
- Virtual mode 58

Settings in the »EASY Starter«:

- Tab **Settings** - Parameter dialog **Kinematics**

6.2.1 Mass inertia (load/motor)

The resulting moment of inertia consists of the moment of inertia of the motor and the moment of inertia of the load.

Parameter

Address	Name / setting range / [default setting]	Information
0x2910:001	Inertia settings: Motor moment of inertia 0.00 ... [**0.14**] ... 20000000.00 kg cm²	Setting of the moment of inertia of the motor, relating to the motor.
0x500A:037	Load moment of inertia 0.00 ... [**0.00**] ... 21474836.47 kg cm²	Setting of the mass inertia of the load with regard to the gearbox output.

6.2.2 Torque feedforward control

For an optimal motion control, the motion axis has an automatic function for the torque feedforward control.

The torque feedforward control is calculated from the current setpoint acceleration and the resulting moment of inertia.

6.2.3 Motor/encoder mounting direction

Depending on the mounting direction, the direction of motor rotation or the encoder direction of rotation can be inverted.

Parameter

Address	Name / setting range / [default setting]		Information
0x500A:035	Motor mounting direction • Setting can only be changed if the inverter is disabled.		If the parameter is set to CCW, a positive motion of the machine is inverted so that the direction of rotation of the motor becomes negative.
	false	CW	CW : Clockwise rotating motor = positive machine direction
	true	CCW	CCW : Counter-clockwise rotating motor = negative machine direction
0x500B:035	Load encoder mounting direction • Setting can only be changed if the inverter is disabled.		The mounting direction of the additional load encoder is set in this parameter.
	false	CW	CW : Clockwise rotating motor = positive machine direction
	true	CCW	CCW : Counter-clockwise rotating motor = negative machine direction

6.2.4 Motor/encoder gearbox ratio

The necessary data for configuring the gearbox ratio is listed in the gearbox catalog.

For a precise specification of the gearbox ratio, the specified number of teeth **z1 ... z4** from the gearbox catalog must be used.

The gearbox ratio indicates how many motor axis revolutions equal one revolution of the load axis.

The gearbox ratio is configured using a quotient (numerator/denominator).

The gearbox ratio for the motor is influenced by 4 parameters:

- Gearbox factor numerator ▸ 0x500A:033
- Gearbox factor denominator ▸ 0x500A:034
- Additional gearbox factor numerator ▸ 0x500A:025
- Additional gearbox factor denominator ▸ 0x500A:026

The gearbox ratio for the second encoder is influenced by 2 parameters:

- Gearbox factor numerator ▸ 0x500B:033
- Gearbox factor denominator ▸ 0x500B:034

Example:

After 58,667 rotations (i) of the motor axis, the spindle turns once.

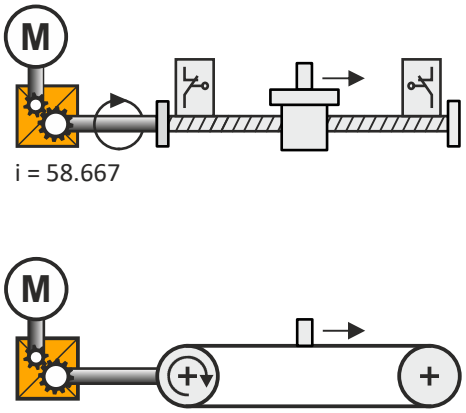

Fig. 2: Schematic diagram of the gearbox ratio

Parameter

Address	Name / setting range / [default setting]	Information
0x500A:025	Additional gearbox factor - numerator 1 ... [**1**] ... 4294967295 • Setting can only be changed if the inverter is disabled.	
0x500A:026	Additional gearbox factor - denominator 1 ... [**1**] ... 4294967295 • Setting can only be changed if the inverter is disabled.	
0x500A:033	Gearbox factor - nominator 1 ... [**1**] ... 4294967295 • Setting can only be changed if the inverter is disabled.	
0x500A:034	Gearbox factor - denominator 1 ... [**1**] ... 4294967295 • Setting can only be changed if the inverter is disabled.	
0x500B:033	Gearbox factor - nominator 1 ... [**1**] ... 4294967295 • Setting can only be changed if the inverter is disabled.	
0x500B:034	Gearbox factor - denominator 1 ... [**1**] ... 4294967295 • Setting can only be changed if the inverter is disabled.	

Example of how to calculate the ratio

Example calculation	
$$i = \frac{0x500A:033}{0x500A:034} = \frac{z2 \times z4}{z1 \times z3} = \frac{88 \times 72}{12 \times 9} = \frac{6336}{108} = 58.667$$	
Gearbox factor numerator	0x500A:033
Gearbox factor denominator	0x500A:034

Tab. 1: Example of how to calculate the gearbox ratio

6.2.5 Motor/encoder feed constant

The feed constant corresponds to the machine motion for one revolution of the gearbox output shaft.

When a turntable is used, the feed constant is = 360°/revolution when defined as an angle.

The feed constant of a conveyor drive results from the circumference of the drive roll.

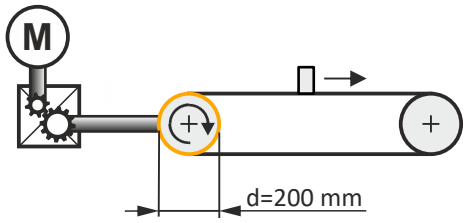

Calculation of the feed constant
$V_k = \frac{\pi \times d}{n}$

Symbol	Description
F_C	Feed constant
d	Diameter
n	Revolution

Example:

The feed constant of a spindle drive (linear axis) results from the leadscrew pitch. The feed constant indicates the distance travelled by the slide in one revolution (in the following example 5,023 mm).

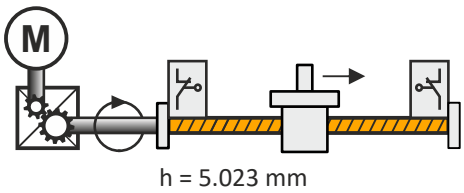

Fig. 3: Feed constant of a spindle drive

h Leadscrew pitch from the technical data of the linear axis

The kinematic parameters for the second encoder can be used to define how an imported encoder position or encoder speed should be converted into machine units.

Parameter

Address	Name / setting range / [default setting]	Information
0x500A:032	Feed constant 0.0001 ... [**360.0000**] ... 214748.3647 • Setting can only be changed if the inverter is disabled.	
0x500B:032	Feed constant 0.0001 ... [**360.0000**] ... 214748.3647 • Setting can only be changed if the inverter is disabled.	

6.2.6 Motor/encoder travel ranges and cycle length

Linearly limited travel range

- The travel range in the positive and negative direction is limited mechanically and on the software side by limit switches.
- After travelling a defined distance, the drive returns in the opposite direction.

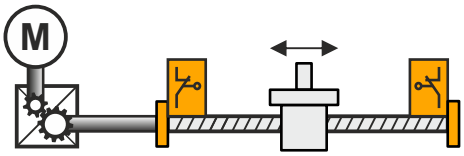

Fig. 4: Spindle drive (linear axis)

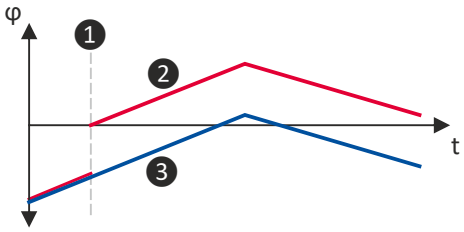

Fig. 5: Position representation

1	Setting of the home position	3	Position in the motor measuring system
2	Position in the machine measuring system		

Unlimited travel range (Modulo)

- The measuring system is repeated.
- When the set cycle length is exceeded, a defined overflow takes place.
- The cycle length corresponds to one revolution or tool distance of a turntable (end position = starting position).
- Software limit switches are not active.
- Absolute targets can be approached by exceeding the measuring system limit.

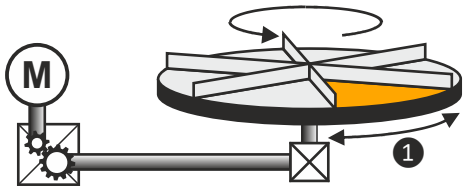

Fig. 6: Turntable

1	Cycle length (illustration = 60°)

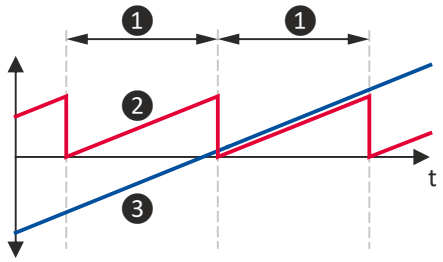

Fig. 7: Position representation

1 Cycle length ▸ 0x500A:031
2 Position in the machine measuring system
3 Position in the motor measuring system

The kinematic parameters for the second encoder serve to define the conversion of an imported encoder position or encoder speed in machine units.

Parameter

Address	Name / setting range / [default setting]	Information
0x500A:030	Travel range • Setting can only be changed if the inverter is disabled.	Selection of the traversing range for the motor
	0 **Modulo**	Unlimited traversing range (turntable). The cycle length must also be specified here.
	1 Limited	Linearly limited traversing range (spindle drive).
0x500A:031	Cycle length 0.0001 ... [**360.0000**] ... 214748.3647 • Setting can only be changed if the inverter is disabled.	The cycle length for an unlimited traversing range defines the position where the measuring system is repeated (position return to 0).
0x500B:030	Travel range • Setting can only be changed if the inverter is disabled.	Selection of the traversing range with regard to the encoder position.
	0 **Modulo**	Unlimited traversing range (turntable). The cycle length must also be specified here.
	1 Limited	Linearly limited traversing range (spindle drive).
0x500B:031	Cycle length 0.0001 ... [**360.0000**] ... 214748.3647 • Setting can only be changed if the inverter is disabled.	The cycle length for an unlimited traversing range defines the position where the measuring system is repeated (position return to 0).

6.2.7 Virtual mode

The application can be tested without a connected motor. For this purpose, the setpoint selection for the drive can be interrupted.

When the virtual mode is active, the setpoints generated in the application are not transmitted to the drive. The actual values (e. g. position and velocity) are generated from the setpoints.

The kinematic parameters do not have any influence in the virtual mode. Only the parameters **travel range** and **cycle length** are used for the machine measuring system.

Machine measuring system parameters

- **Travel range** ▸ 0x500A:030
- **Cycle length** ▸ 0x500B:031

For diagnostic purposes, an active virtual mode is displayed in the **Status word** parameter.
▸ 0x500A:005 Bit 0

Parameter

Address	Name / setting range / [default setting]		Information
0x500A:029	Virtual mode • Setting can only be changed if the inverter is disabled.		
	false	Inactive	
	true	Active	

6.3 Motion settings

Motion settings can be made for the following functions:

- Quick stop 59
- Halt 60
- Following error monitoring 60
- Target position detection 61
- Motor/encoder standstill detection 61
- Conditioning of the encoder signal 61
- Behaviour in the event of inverter disable 62
- Control modes 63
- Manual jog (inching mode) 64
- Homing 65
- Limitations 78

Settings in the »EASY Starter«:

- Tab **Settings** - Parameter dialog **Motion**

6.3.1 Quick stop

The quick stop function is used for stopping the axis and in the event of an error.

The ramp used can be set via the following parameters:

- 0x500A:048
- 0x500A:049

If the quick stop function is active, it is displayed in the **status word** of the technology application. 0x500A:005 Bit 13

The source for the signal for activating quick stop is set under the **Application quick stop source** parameter. 0x5020:007

Special features

- The quick stop function starts with the acceleration "0".

  Exception: If the axis is already in the deceleration phase, it is started with the active setpoint acceleration to avoid prolonging the existing braking process.
- Setpoint generation for the quick stop function starts at the actual speed.
- During the deceleration it is changed to the speed-controlled operation.
- After reaching standstill, it is changed to the position control.
- During the stop, no torque reduction is effective.

Parameter

Address	Name / setting range / [default setting]		Information
0x500A:048	Application quick stop - deceleration 0.01 ... [**3600.00**] ... 21474836.47		
0x500A:049	Application quick stop - jerk 0.00 ... [**0.00**] ... 21474836.47		
0x5020:007	Application quick stop source		Selection of the signal source for activating the quick stop.
	0	**FALSE**	
	1	TRUE	
	2	Digital input 1	
	3	Digital input 2	
	4	Digital input 3	
	5	Digital input 4	

6.3.2 Halt

By triggering this function, the technology application enables the axis to be braked to standstill with the values parameterised for deceleration and jerk based on the current setpoints.

Parameter

Address	Name / setting range / [default setting]	Information
0x500A:186	Deceleration of Halt 0.00 ... [**1800.00**] ... 21474836.47	
0x500A:187	Jerk of Halt 0.00 ... [**0.00**] ... 21474836.47	

6.3.3 Following error monitoring

The difference between the setpoint position and the actual position is the following error. The following error should be "0". If the position control is set optimally, only a minimal following error will occur. The following error is compensated dynamically and does not grow continuously.

However, certain processes impose a certain maximum limit in terms of the difference between the setpoint position and the actual position. If the limit is exceeded, it might be (for example) because of a failure to perform a movement within the machine, meaning that the system component does not reach the defined position at the relevant point in time. In such cases, it is appropriate to trigger an error response. The error response is adjustable.
▸ 0x500A:059

For diagnostic purposes, the current and maximum following error are displayed in the diagnostic parameter. ▸ 0x500A:058

Behaviour when the following error monitoring is active (0x500A:054 = activated)

Two following error limits can be parameterised.

Exceedance of following error limit 1 (0x500A:055):

- A warning is displayed.
- The current movement of the axis is not interrupted.

Exceedance of following error limit 2 (0x500A:056):

- The set error response is executed. 0x500A:059

Parameter

Address	Name / setting range / [default setting]		Information
0x500A:054	Following error monitoring		
	false	Inactive	
	true	Active	
0x500A:055	Following error: Warning threshold 0.0000 ... [**180.0000**] ... 214748.3647		
0x500A:056	Following error: Error threshold 0.0000 ... [**360.0000**] ... 214748.3647		
0x500A:057	Actual following error • Read only		
0x500A:058	Max. following error • Read only		
0x500A:059	Response to following error		
	19	Fault > Application quick stop > Quick stop	
	20	**Fault > Application quick stop > Quick stop**	
	21	Fault> Application quick stop > Inverter disabled	

6.3.4 Target position detection

The target position detection identifies whether the axis is in the symmetrical target position window after the dwell time has elapsed.

The information is provided in the **Status word** parameter of the technology application.

- Status word — Axis: ▸ 0x500A:005 Bit 23
- Status word — Virtual master axis:0x500C:005 Bit 23

Under these conditions, the "Axis in target" status (bit 23 = TRUE) is reset to FALSE:

- The actual position has left the target position window.
- A new motion task is started.
- The home position is reset.

Parameter

Address	Name / setting range / [default setting]	Information
0x500A:130	Position window size 0.0000 ... [**0.0000**] ... 214748.3647	
0x500A:131	Position window dwell time 0.000 ... [**0.000**] ... 2147483.647 s	
0x500A:135	Modulo positioning tolerance window 0.0000 ... [**0.0000**] ... 214748.3647	

6.3.5 Motor/encoder standstill detection

The standstill detection identifies whether the axis is at standstill.

The information is provided in the **status word** parameter of the technology application.

- Axis status word: ▸ 0x500A:005, bit 22

Parameter

Address	Name / setting range / [default setting]	Information
0x500A:132	Standstill window size (motor encoder) 0.0000 ... [**0.0000**] ... 214748.3647	
0x500B:132	Standstill window size (load encoder) 0.0000 ... [**0.0000**] ... 214748.3647	

6.3.6 Conditioning of the encoder signal

For further processing of encoder values in the technology application, it might be necessary to condition the value so that interference within the signal does not detrimentally affect the coupling.

The following separately adjustable filters are available for conditioning the actual value:

Parameter

Address	Name / setting range / [default setting]	Information
0x500B:065	Filter cycles of actual velocity 1 ... [**1**] ... 100	
0x500B:066	Filter cycles of actual position 1 ... [**1**] ... 100	

6.3.7 Behaviour in the event of inverter disable

In standard cases, the setpoint position is compared against the actual position when the inverter is disabled. A position window can be used to control the automatic comparison between the setpoint position and actual position in the case of a disabled inverter. In the position window, positive and negative deviations can be set separately. If the distance between the last setpoint position before inverter disable and the current actual position is smaller than the parametrised value, the setpoint position keeps its last value. The setpoint position and the actual position will be compared upon exiting this window.

If the value is set to 0 units, the setpoint position is equated with the actual position in the case of an inverter disable. The limit value set for the upper and lower limits of the window in the parameters must not exceed the drift of the actual position at drive standstill plus an additional safety margin.

If higher values are set, the position controller makes a jerky compensation after the inverter is enabled. This is due to the existing system deviation.

Limit values:

- 0x500A:136
- 0x500A:137

Behaviour in case of an inverter disable during a movement

If the drive is disabled during a movement, for instance by the control word in the application or via the STO safety function, an error is triggered.

The **Resp. to inverter disable during motion** parameter can be used to set a different response. ▸ 0x500A:107

Parameter

Address	Name / setting range / [default setting]		Information
0x500A:107	Response to inverter disable during operation		
	0	**No response**	
	2	Warning	
	19	Fault > Application quick stop > Quick stop	
0x500A:136	Tolerance window actual position=set position upper limit 0.0000 ... [**0.0000**] ... 214748.3647		
0x500A:137	Tolerance window actual position=set position lower limit 0.0000 ... [**0.0000**] ... 214748.3647		

6.3.8 Control modes

With the default setting, the axis is always operated with activated speed control except the function used in the application requires a different control mode. ▸ 0x500A:090

The speed control is used if no motor encoder is available.

The speed control is used in the first homing phase during the search for the reference signal.

The speed control is used during deceleration with the quick stop function.

The active control type is displayed in the **Active control mode** parameter. 0x500A:091

Parameter

Address	Name / setting range / [default setting]		Information
0x500A:090	Default control mode • Setting can only be changed if the inverter is disabled.		
	0	Position control via motor encoder	
	1	Position control via load encoder	
	10	**Speed control via motor encoder**	
0x500A:091	Actual control mode • Read only		
	0	Position control via motor encoder	
	1	Position control via load encoder	
	10	Speed control via motor encoder	
	20	Torque control	
0x500A:092	Load encoder selection • Setting can only be changed if the inverter is disabled.		
	-		
	Encoder_Axis		
0x500A:093	Position controller gain 0.0000 ... [**20.0000**] ... 214748.3647 1/s		
0x500A:094	Load encoder output limit 0.0000 ... [**100000.0000**] ... 214748.3647		
0x500A:095	Position controller output • Read only		

6.3.9 Manual jog (inching mode)

The "manual jog" function enables manual traversing of the drive ("inching mode").

"Manual jog" can be activated via 2 control signals in the technology application. "Manual jog" is possible in the positive and negative directions.

- As long as the control bit is set, the drive moves.
- If both requests are set simultaneously, the drive stops.
- If the reference is known and the software limit switches are activated, positioning to the corresponding software limit switch is carried out.

  Exception: If the manual jog has been stopped manually before this by resetting the control inputs, a positioning to the corresponding software limit switch is aborted.

  The drive brakes with the set deceleration to the position of the corresponding hardware limit switch.
- If the reference is not known or the software limit switches are not activated, the axis only stops at the hardware limit switch.

The manual jog of the technology interface takes place via the following parameters:

- **Manual control**, bit 0 ... bit 7. ▸ 0x5030:001, bit 0 ... bit 7
- **Simulation of status signals**, bit 0. ▸ 0x5030:101, bit 0

Bit 0 of the **manual control** parameter activates the manual jog of the technology functionality. ▸ 0x5030:001, bit 0

By activating bit 0, the first double word of the control words are applied to manual operation. The remaining control words of the field/system bus are still transferred by the bus system when bit 0 is activated.

They can be changed over individually to manual jog via the **Manual control** parameter, bit 1 ... bit 7. ▸ 0x5030:001, bit 1 ... bit 7

Bit 0 of the **Simulation of status signals - positioner as follower** parameter activates the status interface simulation. ▸ 0x5030:101 bit 0.

All status words are switched to manual jog.

Parameter

Address	Name / setting range / [default setting]	Information
0x500A:181	Manual jog velocity 0.0000 ... [**360.0000**] ... 214748.3647	
0x500A:182	Manual jog acceleration 0.00 ... [**720.00**] ... 21474836.47	
0x500A:183	Manual jog deceleration 0.00 ... [**1440.00**] ... 21474836.47	
0x500A:184	Manual jog jerk 0.00 ... [**0.00**] ... 21474836.47	

6.3.10 Homing

The zero point in the travel range is defined as a reference for absolute positions via the reference run.

The activation takes place by the control word of the technology application.

The information that a home position has been recognized is provided in the **status word** of the technology application. ▸ 0x500A:005, bit 5

Safety function: ▸ Safe homing (SHom) 🕮 507

Profile data for homing

For the homing process, 2 profile data sets can be parameterized with different speeds and accelerations. The time for homing is reduced and the accuracy is increased.

- Profile data set 1: Quick approach of the limit switch (depending on the selected mode).
- Profile data set 2: Slow and exact approach of the limit switch and positioning to the target position.
- If speed 2 is set = "0" (initial value), there is no changeover to the profile data set 2. Homing is carried out with the profile parameters of profile data set 1.

6.3.10.1 Homing process

Parameter

Address	Name / setting range / [default setting]		Information
0x500A:070	Homing mode		
	-2	CwTorqueLimit	
	-1	CcwTorqueLimit	
	0	**SetPositionDirect**	
	1	CcwLimitSwitchCwTP	
	2	CwLimitSwitchCcwTP	
	3	CwRpCcwRnTP	
	5	CcwRpCwRnTP	
	17	CcwLimitSwitch	
	18	CwLimitSwitch	
	19	CwRpCcwRn	
	21	CcwRpCwRn	
	33	CcwTP	
	34	CwTP	
	97		
	98		
	99	Reset home position	
0x500A:071	Action after "Home position detected"		Action of the drive after the home position has been detected.
	0	**Stop positioning**	The drive stops.
	1	Relative positioning	Relative positioning by the distance set in 0x503F:072.
	2	Absolute positioning	Absolute positioning to the position set in 0x503F:072
0x500A:078	Homing: Torque limit 0.00 ... [**0.10**] ... 21474836.47 Nm		Only for "homing to end stop": Homing mode • 0x6098 = [-2] (CwTorqueLimit) • 0x6098 = [-1] (CcwTorqueLimit) The reference is set when the drive is at standstill during the blocking time and the actual torque is greater than the torque limit.
0x500A:079	Homing: Blocking time 0.000 ... [**1.000**] ... 2147483.647 s		

Address	Name / setting range / [default setting]		Information
0x500A:080	Homing: Touch probe configuration		Selection of the source for setting the home position
	0	External source	
	1	**TP1 - positive edge**	Edge of the touch probe sensor at DI1
	2	TP1 - negative edge	
	3	TP1 - any edge	
	4	TP1 - zero pulse	Zero pulse of the motor encoder
	5		
	11	TP2 - positive edge	Edge of the touch probe sensor at DI2
	12	TP2 - negative edge	
	13	TP2 - any edge	
	14	TP2 - zero pulse	Zero pulse of the motor encoder
	15		
	21	TP3 - positive edge	Edge of the touch probe sensor at DI3
	22	TP3 - negative edge	
	23	TP3 - any edge	
	24	TP3 - zero pulse	Zero pulse of the motor encoder
	25		
	31	TP4 - positive edge	Edge of the touch probe sensor at DI4
	32	TP4 - negative edge	
	33	TP4 - any edge	
	34	TP4 - zero pulse	Zero pulse of the motor encoder
	35		
0x500A:084	Home position -214748.3648 ... [**0.0000**] ... 214748.3647		

6.3.10.2 Homing modes

Designation	0x500A:070	Evaluated signals/sensors			
		TP sensor Encoder zero pulse	Travel range limit switch		Reference switch
			negative	positive	
CwTorqueLimit	-2	Positive direction to torque limit			
CcwTorqueLimit	-1	Negative direction to torque limit			
CcwLimitSwitchCwTP	1	X	X		
SetPositionDirect	0	Set reference directly			
CwLimitSwitchCcwTP	2	X		X	
CwRpCcwRnTP	3	X			X
CcwRpCwRnTP	5	X			X
CcwLimitSwitch	17		X		
CwLimitSwitch	18			X	
CwRpCcwRn	19	X			X
CcwRpCwRn	21	X			X
CcwTP	33	X			
CwTP	34	X			
ResetHomeInfo	99	Reset of status "Reference known"			

Homing mode 1: CcwLimitSwitchCwTP

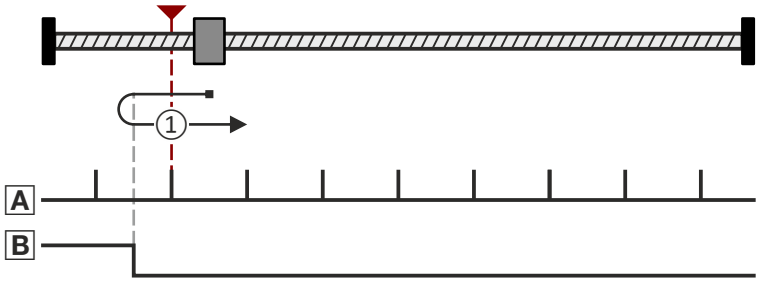

Fig. 8: Negative direction with reversing limit switch to touch probe

A Touch probe/zero pulse B Negative travel range limit switch

Sequence of case ①:

1. The machine part moves in negative direction with profile data set 1.
2. The machine part reverses to the negative travel range limit switch (B) and changes to profile data set 2.
3. The negative edge of the travel range limit switch (B) activates the touch probe detection.
4. The following positive edge of the encoder zero pulse/touch probe sensor (A) sets the reference.
5. Further actions can be selected:
   - Drive stops (default setting).
   - Relative positioning by a set target position.
   - Absolute positioning to a set target position.

Homing mode 2: CwLimitSwitchCcwTP

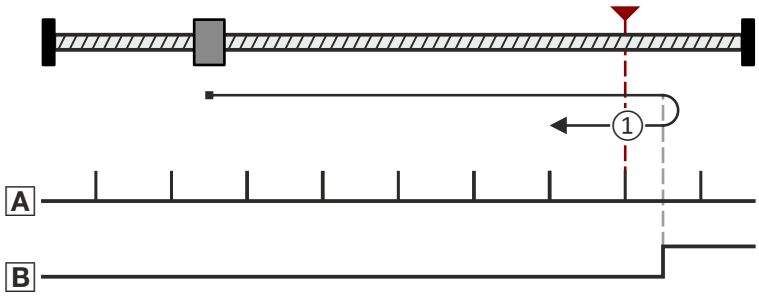

Fig. 9: Positive direction with reversing limit switch to touch probe

A Touch probe/zero pulse B Positive travel range limit switch

Sequence of case ①:

1. The machine part moves in positive direction with profile data set 1.
2. Machine part reverses to positive travel range switch (B) and changes to profile data set 2.
3. The negative edge of the travel range limit switch (B) activates the touch probe detection.
4. The following positive edge of the encoder zero pulse/touch probe sensor (A) sets the reference.
5. Further actions can be selected:
   - Drive stops (default setting).
   - Relative positioning by a set target position.
   - Absolute positioning to a set target position.

Reference run 3: CwRpCcwRnTP

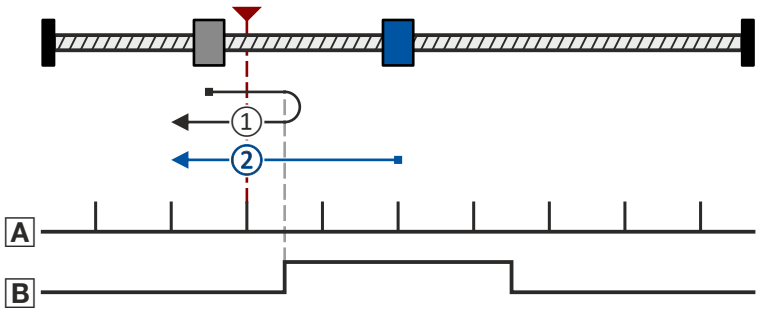

Fig. 10: Positive direction with reversing limit switch and negative edge of the reference switch to touch probe

A Touch probe/zero pulse B Reference switch

Sequence of case ①:

The axis has not yet activated the reference switch:

1. The machine part moves in positive direction with profile data set 1.
2. The machine part reverses with positive edge of the reference switch (B) and changes to profile data set 2.
3. The negative edge of the reference switch (B) activates the touch probe detection.
4. The following positive edge of the encoder zero pulse/touch probe sensor (A) sets the reference.
5. Further actions can be selected:
   - Drive stops (default setting).
   - Relative positioning around a set target position.
   - Absolute positioning to a set target position.

Sequence for case ②:

The axis has already activated the reference switch:

1. The machine part moves in negative direction with profile data set 2.
2. The negative edge of the reference switch (B) activates the touch probe detection.
3. The following positive edge of the encoder zero pulse/touch probe sensor (A) sets the reference.
4. Further actions can be selected:
   - Drive stops (default setting).
   - Relative positioning around a set target position.
   - Absolute positioning to a set target position.

Homing mode 5: CcwRpCwRnTP

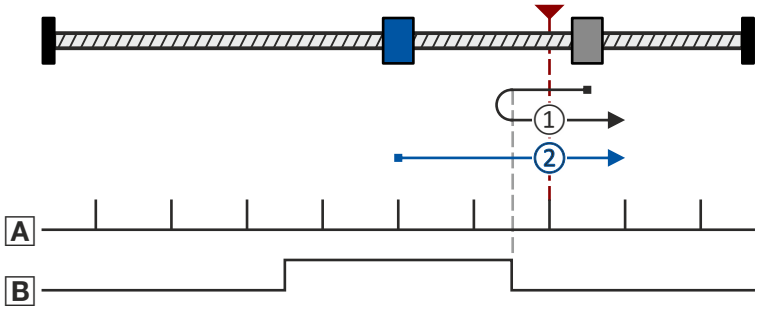

Fig. 11: Negative direction with reversing reference switch and negative edge of the reference switch to touch probe

A Touch probe/zero pulse B Reference switch

Sequence of case ①:

The axis has not yet activated the reference switch:

1. The machine part moves in negative direction with profile data set 1.
2. The machine part reverses with positive edge of the reference switch (B) and changes to profile data set 2.
3. The negative edge of the reference switch (B) activates the touch probe detection.
4. The following positive edge of the encoder zero pulse/touch probe sensor (A) sets the reference.
5. Further actions can be selected:
   - Drive stops (default setting).
   - Relative positioning by a set target position.
   - Absolute positioning to a set target position.

Sequence of case ②:

The axis has already activated the reference switch:

1. The machine part moves in positive direction with profile data set 2.
2. The negative edge of the reference switch (B) activates the touch probe detection.
3. The following positive edge of the encoder zero pulse/touch probe sensor (A) sets the reference.
4. Further actions can be selected:
   - Drive stops (default setting).
   - Relative positioning by a set target position.
   - Absolute positioning to a set target position.

Homing mode 17: CcwLimitSwitch

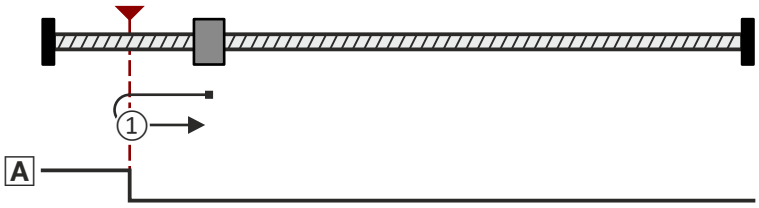

Fig. 12: Negative direction to limit switch

A Negative travel range limit switch

Sequence of case ①:

1. The machine part moves in negative direction with profile data set 1.
2. The machine part reverses to negative travel range limit switch (A) and changes to profile data set 2.
3. The following negative edge of the travel range limit switch (A) sets the reference.
4. Further actions can be selected:
   - Drive stops (default setting).
   - Relative positioning by a set target position.
   - Absolute positioning to a set target position.

Homing mode 18: CwLimitSwitch

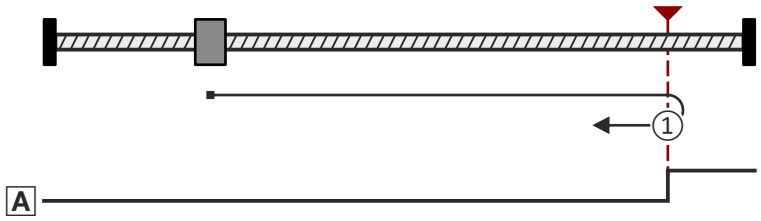

Fig. 13: Positive direction to limit switch

A Positive travel range limit switch

Sequence of case ①:

1. The machine part moves in positive direction with profile data set 1.
2. The machine part reverses to positive travel range limit switch (A) and changes to profile data set 2.
3. The following negative edge of the travel range limit switch (A) sets the reference.
4. Further actions can be selected:
   - Drive stops (default setting).
   - Relative positioning by a set target position.
   - Absolute positioning to a set target position.

Homing mode 19: CwRpCcwRn

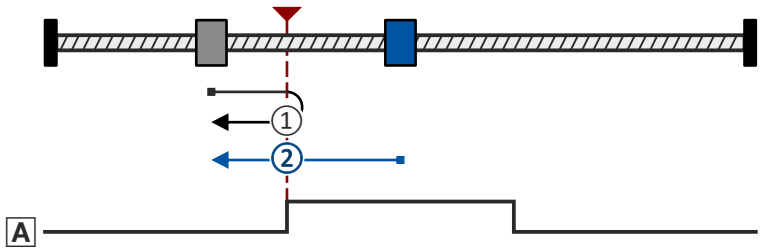

Fig. 14: Sequence representation of case 1 and case 2

A Reference switch

Sequence of case ①:

The axis has not yet activated the reference switch:

1. The machine part moves in positive direction with profile data set 1.
2. Machine part reverses with positive edge of the reference switch (A) and changes to profile data set 2.
3. The negative edge of the reference switch (A) sets the reference.
4. Further actions can be selected:
   - Drive stops (default setting).
   - Relative positioning by a set target position.
   - Absolute positioning to a set target position.

Sequence of case ②:

The axis has already activated the reference switch:

1. The machine part moves in negative direction with profile data set 2.
2. The negative edge of the reference switch (A) sets the reference.
3. Further actions can be selected:
   - Drive stops (default setting).
   - Relative positioning by a set target position.
   - Absolute positioning to a set target position.

Homing mode 21: CcwRpCwRn

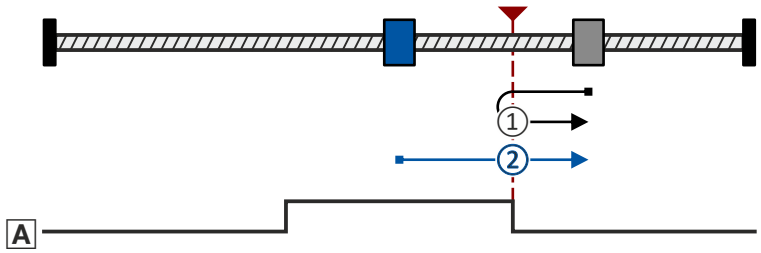

Fig. 15: Sequence representation of case 1 and case 2

A Reference switch

Sequence of case ①:

The axis has not yet activated the reference switch:

1. The machine part moves in negative direction with profile data set 1.
2. The machine part reverses with positive edge of the reference switch (A) and changes to profile data set 2.
3. The negative edge of the reference switch (A) sets the reference.
4. Further actions can be selected:
   - Drive stops (default setting).
   - Relative positioning by a set target position.
   - Absolute positioning to a set target position.

Sequence of case ②:

The axis has already activated the reference switch:

1. The machine part moves in positive direction with profile data set 2.
2. The negative edge of the reference switch (A) sets the reference.
3. Further actions can be selected:
   - Drive stops (default setting).
   - Relative positioning by a set target position.
   - Absolute positioning to a set target position.

Homing mode 33: CcwTP

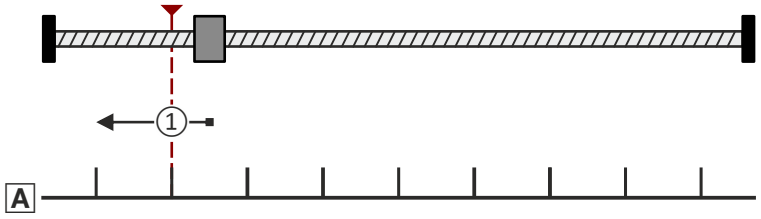

Fig. 16: Negative direction to touch probe

A Touch probe/zero pulse

Sequence of case ①:

1. The machine part moves to negative direction with profile data set 1 and activates the touch probe detection.
2. The following set edge of the encoder zero pulse/touch probe sensor (A) sets the reference.
3. Further actions can be selected:
   - Drive stops (default setting).
   - Relative positioning by a set target position.
   - Absolute positioning to a set target position.

Homing mode 34: CwTP

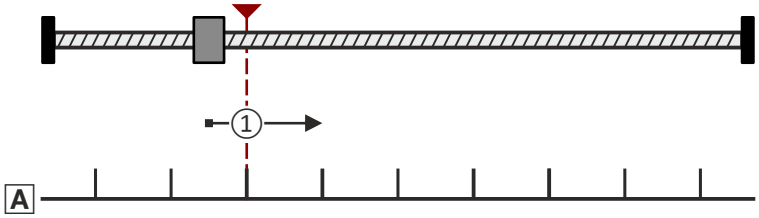

Fig. 17: Positive direction to touch probe

A Touch probe/zero pulse

Sequence of case ①:

1. The machine part moves to positive direction with profile data set 1 and activates the touch probe detection.
2. The following set edge of the encoder zero pulse/touch probe sensor (A) sets the reference.
3. Further actions can be selected:
   - Drive stops (default setting).
   - Relative positioning by a set target position.
   - Absolute positioning to a set target position.

Homing mode -1: CcwTorqueLimit

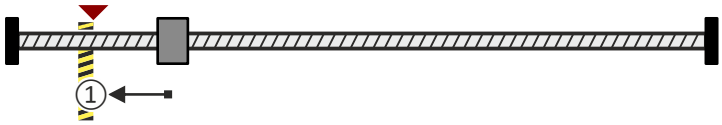

Fig. 18: Negative direction to torque limit

Sequence of case ①:

1. The machine part moves in negative direction with reduced torque and profile data set 1.
2. The reference is set if the following two conditions for the set blocking time are fulfilled at the same time:
   - The current speed is lower than the threshold set for standstill detection.
   - The current torque is higher than the set torque limit (homing to end stop).
3. Further actions can be selected:
   - Drive stops (default setting).
   - Relative positioning by a set target position.
   - Absolute positioning to a set target position.

Homing mode -2: CwTorqueLimit

Fig. 19: Positive direction to torque limit

Sequence of case ①:

1. The machine part moves in positive direction with reduced torque and profile data set 1.
2. The reference is set if the following two conditions for the set blocking time are fulfilled at the same time:
   - The current speed is lower than the threshold set for standstill detection.
   - The current torque is higher than the set torque limit (homing to end stop).
3. Further actions can be selected:
   - Drive stops (default setting).
   - Relative positioning by a set target position.
   - Absolute positioning to a set target position.

Parameter

Address	Name / setting range / [default setting]		Information
0x500A:070	Homing mode		
	-2	CwTorqueLimit	
	-1	CcwTorqueLimit	
	0	**SetPositionDirect**	
	1	CcwLimitSwitchCwTP	
	2	CwLimitSwitchCcwTP	
	3	CwRpCcwRnTP	
	5	CcwRpCwRnTP	
	17	CcwLimitSwitch	
	18	CwLimitSwitch	
	19	CwRpCcwRn	
	21	CcwRpCwRn	
	33	CcwTP	
	34	CwTP	
	97		
	98		
	99	Reset home position	
0x500A:072	Homing: Target position -214748.3648 ... [**0.0000**] ... 214748.3647		• Distance if 0x503F:071 = [1] (Relative positioning) • Absolute position if 0x503F:071 = [2] (Absolute positioning)
0x500A:073	Homing: Velocity 1 0.0000 ... [**360.0000**] ... 214748.3647		
0x500A:074	Homing: Velocity 2 0.0000 ... [**0.0000**] ... 214748.3647		
0x500A:075	Homing: Acceleration 1 0.00 ... [**720.00**] ... 21474836.47		
0x500A:076	Homing: Acceleration 2 0.00 ... [**360.00**] ... 21474836.47		
0x500A:077	Homing: Jerk 0.00 ... [**7200.00**] ... 21474836.47		Jerk for homing

6.3.10.3 Digital input for reference switch

A reference switch is required for some homing modes.

Definition of the source: ▸ 0x5020:006

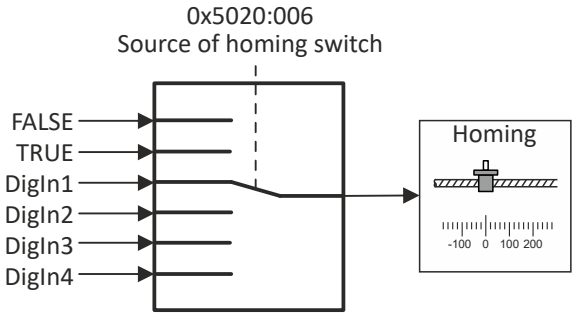

Fig. 20: “Reference switch” selection

Parameter

Address	Name / setting range / [default setting]		Information
0x5020:006	Source of homing switch		Selection of the signal source for activating the reference switch.
	0	FALSE	
	1	TRUE	
	2	**Digital input 1**	
	3	Digital input 2	
	4	Digital input 3	
	5	Digital input 4	

6.3.10.4 Position recovery after mains switching

The home position can be saved when switching off (power off) in order to be able to do without a reference run after switching on again. The inverter reconstructs the absolute actual position and the home position with high precision based on the new values from the encoder and the values stored at switch-off.

Preconditions

Position reconstruction is only possible with encoders that detect the absolute position at least within one revolution.

- Suitable encoders:
  - Absolute value encoder - HIPERFACE®-SinCos (single-turn, multi-turn)
  - Absolute value encoder - SSI
  - Absolute value encoder - SSI-SinCos
  - Absolute value encoder - HIPERFACE DSL® (One Cable Technology, OCT)
  - Two-pole resolvers (number of pole pairs = 1)
  - Special SinCos encoder with increment/period number = 1 (the SinCos evaluation enables the display of the absolute position over one revolution)
- The reference was known before switching off: ▸ 0x282A:004, bit 2 = [TRUE]
- The function is activated.
  - Motor encoder: ▸ 0x500A:081 = 1 [TRUE].
  - Load encoder: ▸ 0x500B:081 = 1 [TRUE].
- In the switched-off state, the drive was moved maximally within the permissible limits:
  - Single-turn absolute value encoder and resolver: Max. ±180° = max. ±0.5 rev.
  - Multi-turn absolute value encoder: Max. ±2048 rev. x 360° = max ±737280° = max. ±2048 rev.

The user must ensure that the current position can be recognized unambiguously!

This means that the user must ensure that the drive does not move beyond the maximum values when the power is off. For example, by using a holding brake.

Details

Behavior of the drive:

- If the angle of rotation is smaller than the maximum value, the absolute actual position is reconstructed in relation to the home position. The drive changes to normal operation without homing.
- If the angle of rotation is greater than the maximum value, the home position is deleted. A new homing is necessary.

Referencing is always necessary for drives with high-pole resolvers with pole pair number > 1.

Incremental encoders (SinCos, TTL) with a number of increments > 1

Additional monitoring of movement during power off

This monitoring can be used to detect a movement in a narrower tolerance range and process this information in the application. Due to its principle, this monitoring can only evaluate movements within the maximum display range of the absolute value encoder described above.

This monitoring is not required for the position reconstruction itself.

Activate additional monitoring of movement during power off:

- Activate function.
  - Motor encoder: ▸ 0x500A:082 ≠ 0°.
  - Load encoder: ▸ 0x500B:081 ≠ 0°.
- Set the permissible angle of rotation.
  - Single-turn absolute value encoder and resolver: -180° < value < ±180°
  - Multi-turn absolute value encoder: -7372800° < value < +737280°

Parameter

Address	Name / setting range / [default setting]	Information
0x500A:081	Home position after mains switching	Home position of motor encoder
	false Delete	A new homing is required.
	true Retain	Position reconstruction is performed.
0x500A:082	Max. angle of rotation after mains switching -2147483648.0000000000 ... [**0.0000000000**] ... 2147483647.0000000000 °	Setting of the maximum angle of rotation for the motor. Motor encoder: Additional monitoring of the torsion angle during power off. 0.0000° = monitoring deactivated • The angle of rotation must be parameterised smaller than half of the maximum display area des Gebers. • If the angle is parameterised to 0°, no check will be performed. Activate only for special applications.
0x500B:081	Home position after mains switching	Home position of load encoder
	false Delete	A new homing is required.
	true Retain	Position reconstruction is performed.
0x500B:082	Max. angle of rotation after mains switching -2147483648.0000000000 ... [**0.0000000000**] ... 2147483647.0000000000 °	Setting of the maximum angle of rotation for the encoder. Load encoder: Additional monitoring of the torsion angle during power off. 0.0000° = monitoring deactivated Activate only for special applications. • The angle of rotation must be parameterised smaller than 50% of the maximum display area of the encoder. • If the angle is parameterised to 0°, there will be no check.

6.3.11 Limitations

6.3.11.1 Internal torque limits

The torque limits currently effective in the drive are set in the parameters and **Positive torque limit** and **Negative torque limit**.

- **Positive torque limit** ▸ 0x500A:128
- **Negative torque limit** ▸ 0x500A:129

Parameter

Address	Name / setting range / [default setting]	Information
0x500A:013	Actual torque • Read only: x.xx Nm	
0x500A:128	Positive torque limit -3276.8 ... [**200.0**] ... 3276.7 %	Positive torque limit • 100 % = rated motor torque 0x6076
0x500A:129	Negative torque limit -3276.8 ... [**200.0**] ... 3276.7 %	Negative torque limit • 100 % = rated motor torque 0x6076
0x6076	Rated motor torque 0.001 ... [**0.600**] ... 100000.000 Nm • Setting can only be changed if the inverter is disabled.	The rated motor torque to be set here serves as a reference value for different parameters with a setting/display of a torque value in percent. Example: • Rated motor torque = 1.65 Nm • Max. torque 0x6072 = 250 % Rated motor torque = 4.125 Nm
0x6077	Actual torque • Read only: x.x %	Display of the actual torque. • 100 % = Rated motor torque 0x6076
0x60E0	Positive torque limit 0.0 ... [**100.0**] ... 3276.7 %	Positive torque limit source for speed control with torque limitation. • 100 % = Rated motor torque 0x6076 • The value is taken from the application: 0x500A:128.

Address	Name / setting range / [default setting]	Information
0x60E1	Negative torque limit 0.0 ... [**100.0**] ... 3276.7 %	Negative torque limit source for speed control with torque limitation. • 100 % = Rated motor torque 0x6076 • The value is taken from the application: 0x500A:129.

6.3.11.2 External torque limits

An external torque limit is defined via the **External torque limit** parameter. ▸ 0x5030:017

The external torque limit is activated with bit 31 of the **Control signal** parameter.
▸ 0x5030:010

Bit 31 of the **Status signals** parameter indicates whether the external torque limit is active.
▸ 0x5030:110

As long as the external torque limit remains inactive, the two parameters **Positive torque limit** and **Negative torque limit** define what torque limits apply.

- **Positive torque limit** ▸ 0x500A:128
- **Negative torque limit** ▸ 0x500A:129

The function mode of the external torque limit is set via the **Impact of external speed limit** parameter. ▸ 0x5030:003

The following settings are possible via this parameter:

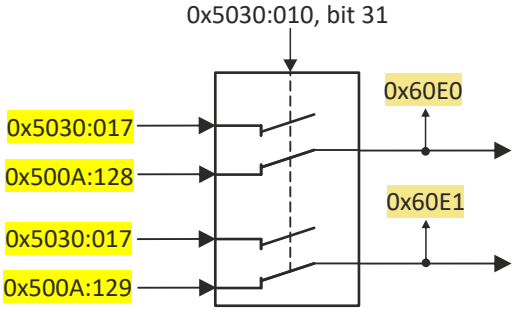

Fig. 21: 0x5030:003 = 0: Setting affects the positive and negative torque limit

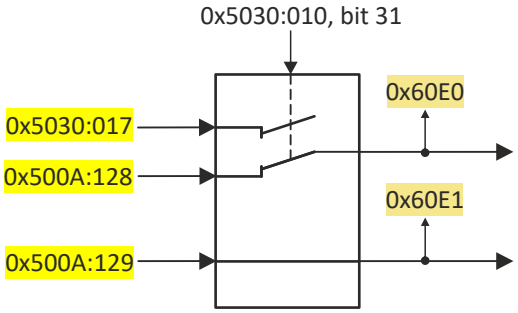

Fig. 22: 0x5030:003 = 1: Setting affects the positive torque limit

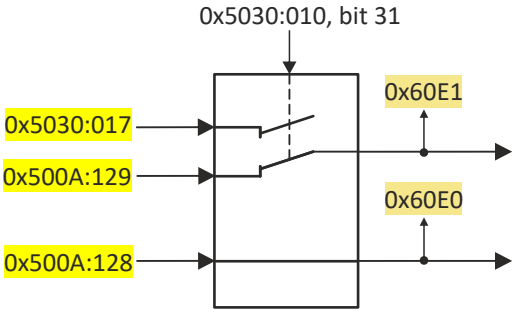

Fig. 23: 0x5030:003 = 2: Setting affects the negative torque limit

Static torque limits can be defined for the axis, which are active during normal operation. The definition is done via the parameters:

- **Positive torque limit** ▸ 0x500A:128
- **Negative torque limit** ▸ 0x500A:129

The torque limits can be deactivated in the technology application and can be replaced by alternative torque limits.

The alternative torque limits are set in the technology application via a control word in the inverter and via the **L_MC1P_SetTorqueLimit** function block in the Controller-based Automation.

If the set torque limits in the technology application have been changed, this is indicated in the **Status word** parameter in bit 20. ▸ 0x500A:005 Bit 20

The torque limits currently effective in the drive are displayed in the parameters **Positive torque limit source** and **Negative torque limit source**. ▸ 0x60E0 ▸ 0x60E1

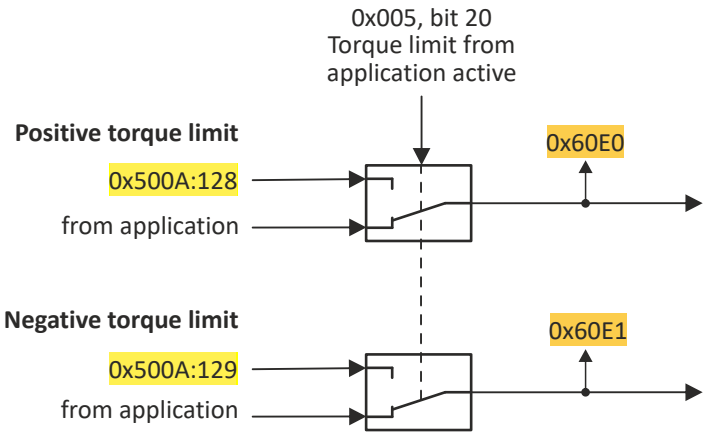

Parameter

Address	Name / setting range / [default setting]	Information
0x500A:128	Positive torque limit -3276.8 ... [**200.0**] ... 3276.7 %	Positive torque limit • 100 % = rated motor torque 0x6076
0x500A:129	Negative torque limit -3276.8 ... [**200.0**] ... 3276.7 %	Negative torque limit • 100 % = rated motor torque 0x6076
0x5030:003	Effect of external torque limit	Validity external torque limit
	0 **Positive and negative direction**	
	1 Positive direction	
	2 Negative direction	
0x5030:017	External torque limit 0.00 ... [**0.00**] ... 21474836.47 %	Value of the external torque limit. Reference: Rated motor torque0x6076
0x5030:115	Actual torque -214748.3648 ... [**0.0000**] ... 214748.3647 Nm	Display of the actual torque
0x60E0	Positive torque limit 0.0 ... [**100.0**] ... 3276.7 %	Positive torque limit source for speed control with torque limitation. • 100 % = Rated motor torque 0x6076 • The value is taken from the application: 0x500A:128.
0x60E1	Negative torque limit 0.0 ... [**100.0**] ... 3276.7 %	Negative torque limit source for speed control with torque limitation. • 100 % = Rated motor torque 0x6076 • The value is taken from the application: 0x500A:129.

6.3.11.3 Maximum values for travel profiles

The following parameters can be used to set maximum values for velocity, acceleration and jerk.

These parameters depend on the mechanics (e.g. the tool used).

The respective limitation is only effective if a non-zero maximum value is set.

If a generated setpoint exceeds the set maximum value (e.g. the maximum velocity), the motion axis triggers a configured error response.

If the axis is not in a synchronised movement, the profile parameters are automatically limited to the set maximum values.

A non-synchronised movement is e.g. a positioning or the manual jog function.

A warning indicates that the profile data have been limited.

Parameter

Address	Name / setting range / [default setting]		Information
0x500A:045	Max. velocity 0.0000 ... [**0.0000**] ... 214748.3647		
0x500A:046	Max. acceleration 0.00 ... [**0.00**] ... 21474836.47		
0x500A:047	Max. jerk 0.00 ... [**0.00**] ... 21474836.47		
0x500A:106	Response to error "max. values exceeded"		
	0	No response	
	2	**Warning**	
	19	Fault > Application quick stop > Quick stop	
	21	Fault> Application quick stop > Inverter disabled	
0x500B:045	Max. velocity 0.0000 ... [**0.0000**] ... 214748.3647		

6.3.11.4 Hardware limit switches

Connection of the hardware limit switches

The hardware limit switches are assigned to the digital inputs via the **Positive hardware limit source** and **Negative hardware limit source** parameters.

- **Positive hardware limit source** ▸ 0x5020:004
- **Negative hardware limit source** ▸ 0x5020:005

The limit switch evaluation responds to a positive edge.

If the limit switch connections for the digital inputs used are to be fail-safe, change the terminal polarity of the corresponding digital inputs.

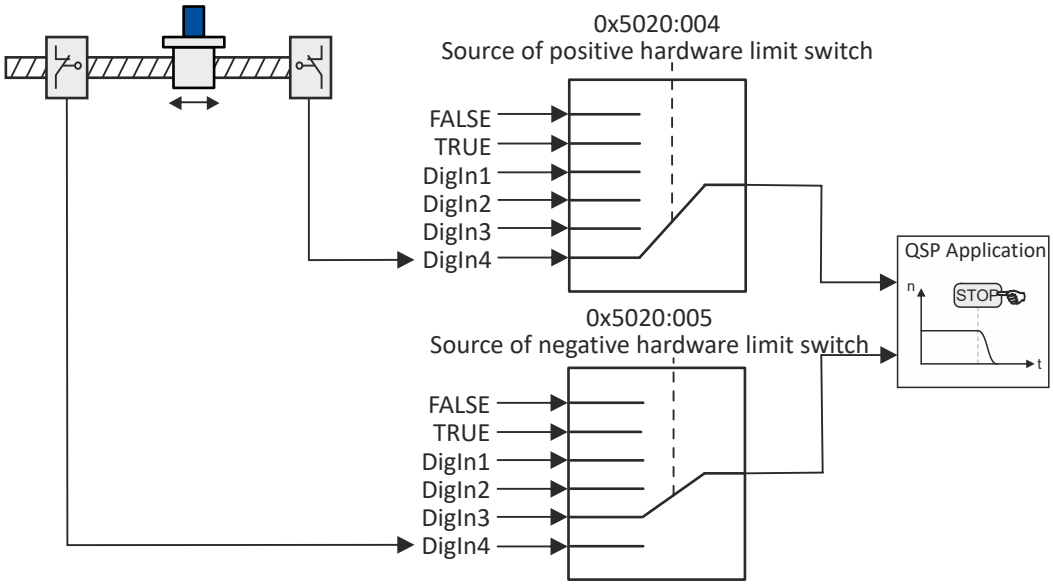

Fig. 24: “Hardware limit switch” selection

Activate the hardware limit switches

If either of the hardware limit switches is activated (TRUE signal is applied to input), the parameterized error response is executed. ▸ 0x500A:104.

The error message "HWLimitPos" or "HWLimitNeg" is output, irrespective whether the axis rotates and in which direction it moves.

Reset error to retract the limit switch.

After the error has been reset, only travel requests in the opposite direction are possible. Travel requests in the direction of the limit switch are aborted in the event of an error.

Diagnostics

Status word of the technology application ▸ 0x500A:005, bits 9 and 10

Parameter

Address	Name / setting range / [default setting]		Information
0x500A:104	Response to hardware limit switch error		
	19	**Fault > Application quick stop > Quick stop**	
	21	Fault> Application quick stop > Inverter disabled	

Address	Name / setting range / [default setting]		Information
0x5020:004	Source of positive hardware limit switch		Selection of the digital inputs for the positive hardware limit switch.
	0	FALSE	Specification of the digital inputs for the positive hardware limit switch.
	1	TRUE	
	2	Digital input 1	
	3	Digital input 2	
	4	Digital input 3	
	5	**Digital input 4**	
0x5020:005	Source of negative hardware limit switch		Selection of the digital inputs for the negative hardware limit switch.
	0	FALSE	Specification of the digital inputs for the negative hardware limit switch.
	1	TRUE	
	2	Digital input 1	
	3	Digital input 2	
	4	**Digital input 3**	
	5	Digital input 4	

6.3.11.5 Software limit switches

The parameterisable software end switches limit the traversing range set via the software.

The software end switches are not active for the "Modulo" traversing range and when a reference run is active.

In the following situations, the software end switches are evaluated, monitored, and shown in the status word when triggered: ▸ 0x500A:005 Bit 6

- The home position is known to the drive. ▸ 0x500A:005 Bit 5
- The software limit switches are effectively switched. ▸ 0x500A:050
- The monitoring was not deactivated from within the application. ▸ 0x500A:005 Bit 24

In the device states "Deactivated" or "Error stop", traversing the software limit switch does not result in an error.

If the software limit switches are exceeded, the set error response is triggered. ▸ 0x500A:105

The software limit switches can be retracted in the direction of the permitted traversing range.

Parameter

Address	Name / setting range / [default setting]		Information
0x500A:050	Enable software limit switches		
	false	Inactive	
	true	Active	
0x500A:051	Software limit switch positive -214748.3648 ... [**0.0000**] ... 214748.3647		
0x500A:052	Software limit switch negative -214748.3648 ... [**0.0000**] ... 214748.3647		
0x500A:053	Action after "software limit switch reached"		
	0	Stop after software limit switch	
	1	**Stop at software limit switch**	
0x500A:105	Response to software limit switch error		
	19	**Fault > Application quick stop > Quick stop**	
	21	Fault> Application quick stop > Inverter disabled	

6.3.11.6 Safety limits

The inverter has functions for supporting the safety technology. Depending on the required safety function, automatic intervention in the setpoint value generation of the axis takes place.

When safety engineering is used in coupled axes, it might be required that a requested safety function does not respond in the single axes but that the responses are recognized centrally. The virtual master is able to recognize the response.

The following safety functions can be restricted or deactivated:

- Safe torque off (STO) 📖 477
- Safe stop 1 (SS1) 📖 479
- Safe stop 2 (SS2) 📖 482
- Safely-limited speed (SLS) 1 ... 4 📖 491
- Safe direction (SDI) positive/negative 📖 501

The requested safety function is displayed in the **Status limiter** parameter. ▸ 0x500A:163

It can be deactivated in the **Deactivate safety functions** parameter. ▸ 0x500A:162

The axis does not affect the setpoint if the functions are deactivated.

Safe stop 1 (SS1) / Safe stop 2 (SS2)

Limited stop 1	Limited stop 2
Status display0x500A:163 bit 1	Status display0x500A:163 bit 2
Quick stop application - deceleration 0x500A:048	Quick stop application - deceleration 0x500A:048
Quick stop application - jerk 0x500A:049	Quick stop application - jerk 0x500A:049
After standstill has been reached, the drive is disabled.	The drive is braked to standstill with the parameters **Quick stop application - deceleration** and **Quick stop application - jerk**. After standstill has been reached, the position control of the drive remains active.

Safely limited speed (SLS) 1 ... 4

The following parameters limit the speeds and set delay times of the axis:

	Speed	Deceleration time
Limited speed 1	0x500A:150	0x500A:151
Limited speed 2	0x500A:152	0x500A:153
Limited speed 3	0x500A:154	0x500A:155
Limited speed 4	0x500A:156	0x500A:157

- If the current setpoint speed exceeds the value set for the requested limited speed, the setpoint speed is reduced to the requested limited speed within the parameterized delay time.
- If several limited speeds are requested at the same time, the lowest speed is reduced with the highest deceleration.

Status display in **Status limiter** parameter. ▸ 0x500A:163, bit 4 ... Bit 7.

Master/slave coupling

In the event of an active master/slave coupling e. g. synchronism or cam profiler application, the speed is not reduced automatically in the default setting. The speed is usually automatically reduced by the master axis.

The automatic speed reduction is activated via the **Follower - response to SLS**parameter. 0x500A:160

If the automatic speed reduction is activated, the cyclically specified setpoints are reduced to the limited speed. The synchronism of the master axis cannot be guaranteed anymore.

If an offset between master and slave occurs, it will be removed automatically by deactivating the parameter. 0x500A:159

An excessive speed due to a following error compensation is avoided by limiting the setpoints at the speed controller input. 0x500A:161

Parameter

Address	Name / setting range / [default setting]		Information
0x500A:150	SLS1 0.0000 ... [**0.0000**] ... 214748.3647		
0x500A:151	SLS1 - deceleration time 0.000 ... [**0.000**] ... 2147483.647 s		
0x500A:152	SLS2 0.0000 ... [**0.0000**] ... 214748.3647		
0x500A:153	SLS2 - deceleration time 0.000 ... [**0.000**] ... 2147483.647 s		
0x500A:154	SLS3 0.0000 ... [**0.0000**] ... 214748.3647		
0x500A:155	SLS3 - deceleration time 0.000 ... [**0.000**] ... 2147483.647 s		
0x500A:156	SLS4 0.0000 ... [**0.0000**] ... 214748.3647		
0x500A:157	SLS4 - deceleration time 0.000 ... [**0.000**] ... 2147483.647 s		
0x500A:159	Compensation velocity of SLS 0.0000 ... [**0.0000**] ... 214748.3647		
0x500A:160	Follower - Response to SLS		
	false	Inactive	
	true	Active	
0x500A:161	Speed controller limitation (SLS)		
	false	Inactive	
	true	Active	
0x500A:162	Deactivate safety interface 0x00000000 ... [**0x00000000**] ... 0xFFFFFFFF		
	Bit 1	Ignore SS1 request	
	Bit 2	Ignore SS2 request	
	Bit 3	Ignore SLS1-4 request	
	Bit 4	Ignore SDI request	
	Bit 5	Ignore SBC request	
0x500A:163	Limiter status • Read only		
	Bit 0	STO active	
	Bit 1	SS1 active	
	Bit 2	SS2 active	
	Bit 3	SOS active	
	Bit 4	SLS1 active	
	Bit 5	SLS2 active	
	Bit 6	SLS3 active	
	Bit 7	SLS4 active	
	Bit 8	SDIpos active	
	Bit 9	SDIneg active	

6.3.12 Dead time compensation

Parameter

Address	Name / setting range / [default setting]	Information
0x500A:067	M-S compensation: Mode • Setting can only be changed if the inverter is disabled.	
	0 **Off**	
	1 Automatic - Set values	
	3 Manually	
0x500A:068	M-S compensation: Time offset -10.000 ... [**0.000**] ... 10.000 ms	
0x500B:067	M-S compensation: Mode • Setting can only be changed if the inverter is disabled.	
	0 **Off**	
	2 Automatic - Actual values	
	3 Manually	
0x500B:068	M-S compensation: Time offset -10.000 ... [**0.000**] ... 10.000 ms	

6.3.13 Status signals

Parameter

Address	Name / setting range / [default setting]	Information
0x2DE0:014	Overwrite bit 4 of CiA control word	
	0 **No overwrite**	
	1 Overwrite with FALSE	
	2 Overwrite with TRUE	
0x500A:004	PLCopen status • Read only	
	1 ErrorStop	
	2 Disabled	
	3 Standstill	
	4 Stopping	
	5 DiscMotion	
	6 SyncMotion	
	7 ContMotion	
	8 Homing	
	10 Service	

Address	Name / setting range / [default setting]		Information
0x500A:005	Status word • Read only		
	Bit 0	Virtual mode active	
	Bit 1	Axis ready	
	Bit 2	Axis enabled	
	Bit 3	Warning active	
	Bit 4	Error active	
	Bit 5	Home position detected	
	Bit 6	Software limit switches enabled	
	Bit 7	Software limit switch positive	
	Bit 8	Software limit switch negative	
	Bit 9	Hardware limit switch positive	
	Bit 10	Hardware limit switch negative	
	Bit 11	STO active	
	Bit 12	Brake opened	
	Bit 13	Application quick stop active	
	Bit 14	Limitation active	
	Bit 16	"Following error" warning active	
	Bit 17	"Following error" error active	
	Bit 18	Homing active	
	Bit 19	Homing switch for touch probe reached	
	Bit 20	Application torque limits	
	Bit 21	Manual jog active	
	Bit 22	Standstill active	
	Bit 23	Set position reached	
	Bit 24	Software limit switches switched off	
	Bit 25		
0x500A:010	Actual position • Read only		
0x500A:011	Actual velocity • Read only		
0x500A:012	Actual acceleration • Read only		
0x500A:014	Set position • Read only		
0x500A:015	Velocity setpoint • Read only		
0x500A:016	Acceleration setpoint • Read only		
0x500A:017	Torque setpoint • Read only: x.xx Nm		
0x500B:005	Status word • Read only		
	Bit 1	Encoder ready	
	Bit 3	Warning active	
	Bit 4	Error active	
	Bit 5	Home position detected	
	Bit 22	Standstill active	
0x500B:010	Actual position • Read only		The current position value is resolved with 4 decimal positions.
0x500B:011	Actual velocity • Read only		The current speed value is resolved with 4 decimal positions.
0x500B:012	Actual acceleration • Read only		

6.4 Defining control sources

This chapter describes the selection of the control source for various control signals.

- Source of quick stop 89
- Source of error reset 90
- Source of digital output 1 90
- Source of monitoring signal 91

Settings in the »EASY Starter«:

- Tab **Settings** - Parameter dialog **Technology application**

6.4.1 Source of quick stop

A quick stop can be requested via the control word or via a digital input. Use the **Source for quick stop** parameter to select which input is used. 0x5020:007

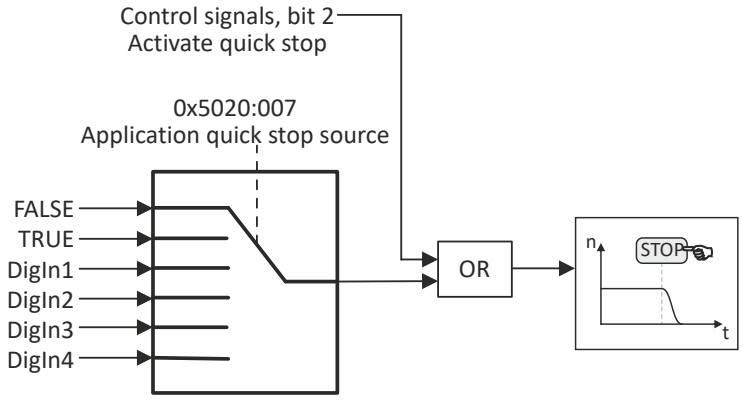

Fig. 25: Selection for quick stop

Parameter

Address	Name / setting range / [default setting]		Information
0x5020:007	Application quick stop source		Selection of the signal source for activating the quick stop.
	0	**FALSE**	
	1	TRUE	
	2	Digital input 1	
	3	Digital input 2	
	4	Digital input 3	
	5	Digital input 4	

6.4.2 Source of error reset

An error can be reset via the fieldbus, the system bus or via a digital input. Use the **Source for error reset** parameter to select which input is used. ▸ 0x5020:008

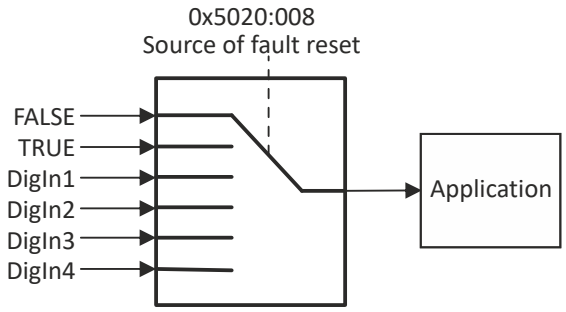

Fig. 26: "Reset error" selection

Parameter

Address	Name / setting range / [default setting]		Information
0x5020:008	Source of fault reset		Selection of digital inputs for resetting errors.
	0	**FALSE**	
	1	TRUE	
	2	Digital input 1	
	3	Digital input 2	
	4	Digital input 3	
	5	Digital input 4	

6.4.3 Source of digital output 1

The signal for digital output 1 is selected via the **Source for digital output 1** parameter.
▸ 0x5020:030

Parameter

Address	Name / setting range / [default setting]		Information
0x5020:030	Source of digital output 1		Signal selection for the digital output 1.
	0	**Ready to switch on**	
	1	Fault	
	2	Homing done	
	3	Profile done	
	4	Brake opened	
	5	Network signal	

6.4.4 Source of monitoring signal

A monitoring signal can be selected for status word 6 and status word 7 respectively.

- Selection for status word 6: ▸ 0x5030:006
- Selection for status word 7: ▸ 0x5030:007

Parameter

Address	Name / setting range / [default setting]		Information
0x5030:006	Display value 1		Signal selection for monitoring signal 1 on status word 6.
	0	**None**	
	1	Actual motor temperature	
	2	Actual motor current	
	3	DC-bus voltage	
	4	Device utilisation	
	5	Motor utilisation	
	6	Analog input 1	
	16	Actual scaled torque	
	17	Set position	
	18	Set velocity	
	19	Set acceleration	
	20	Set torque	
	21	Actual motor speed	
	22	Following error	
	23	Digital inputs	
0x5030:007	Display value 2		Signal selection for monitoring signal 2 on status word 7.
	0	**None**	
	1	Actual motor temperature	
	2	Actual motor current	
	3	DC-bus voltage	
	4	Device utilisation	
	5	Motor utilisation	
	6	Analog input 1	
	16	Actual scaled torque	
	17	Set position	
	18	Set velocity	
	19	Set acceleration	
	20	Set torque	
	21	Actual motor speed	
	22	Following error	
	23	Digital inputs	
0x5030:116	Display value 1 0 ... [**0**] ... 4294967295		Display of the monitor signal "Display value 1" Selection: ▸ 0x5030:006
0x5030:117	Display value 2 0 ... [**0**] ... 4294967295		Display of the monitor signal "Display value 2" Selection: ▸ 0x5030:007

6.5 System bus communication

The system bus is used for the transmission of cyclic-synchronous master values. Eight input words and eight output words with a data width of 32 bits each are available for transmission. The assignment of the double words is shown in the figure "Assignment of system bus input/ output".

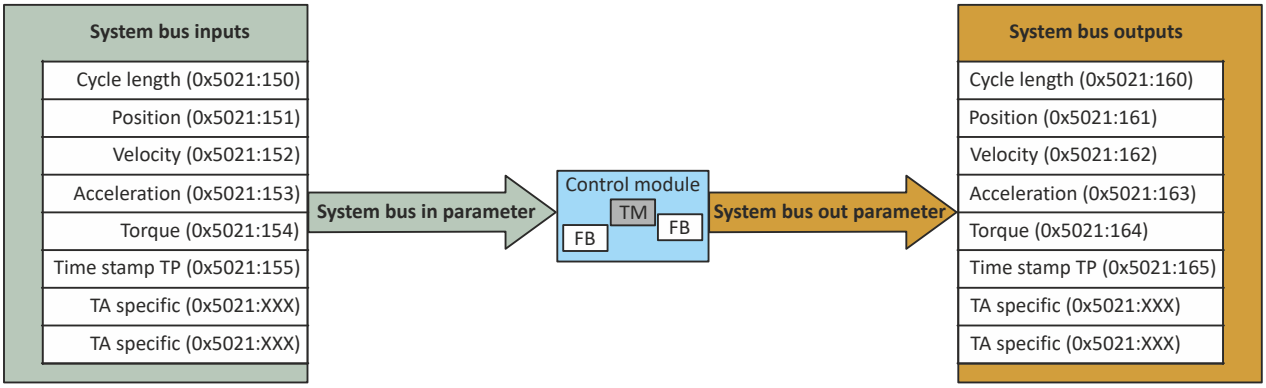

Fig. 27: Assignment of system bus inputs/outputs

Information on network configuration ▸ onboard EtherCAT - Operation as standard EtherCAT slave 🕮 356

6.5.1 Inputs

The following parameters are available for the diagnostics of the system bus input values:

Parameter

Address	Name / setting range / [default setting]	Information
0x5021:150	System bus diagnostics: Cycle length (input value) • Read only	Cycle length of the master axis
0x5021:151	System bus diagnostics: Position (input value) • Read only	Master position value
0x5021:152	System bus diagnostics: Velocity (input value) • Read only	Speed conductivity
0x5021:153	System bus diagnostics: Acceleration (input value) • Read only	Acceleration conductivity
0x5021:154	System bus diagnostics: Torque (input value) • Read only: x.xxxx Nm	Torque of the master axis
0x5021:155	System bus diagnostics: Time stamp (input value) • Read only: x ns	Time stamp of the master axis
0x5021:156	System bus diagnostics: Input data word 6 • Read only	This system bus input word is currently not used, but can be connected in the technology application by the user.
0x5021:157	System bus diagnostics: Input data word 7 • Read only	

6.5.2 Outputs

The following parameters are available for the diagnostics of the system bus output values:

Parameter

Address	Name / setting range / [default setting]	Information
0x5021:160	System bus diagnostics: Cycle length (output value) • Read only	Cycle length of the source set via **Master value output of system bus** 0x5020:001.
0x5021:161	System bus diagnostics: Position (output value) • Read only	Master position value of the source set via **Master value output of system bus** 0x5020:001.
0x5021:162	System bus diagnostics: Velocity (output value) • Read only	Master speed value of the source set via **Master value output of system bus** 0x5020:001.
0x5021:163	System bus diagnostics: Acceleration (output value) • Read only	Master acceleration value of the source set via **Master value output of system bus** 0x5020:001.

Address	Name / setting range / [default setting]	Information
0x5021:164	System bus diagnostics: Torque (output value) • Read only: x.xxxx Nm	Torque of the master axis of the source set via **Master value output of system bus** 0x5020:001.
0x5021:165	System bus diagnostics: Time stamp (output value) • Read only: x ns	Time stamp of the touchprobe source in ns selected via **source TP1** 0x5020:011.
0x5021:166	System bus diagnostics: Output data word 6 • Read only	This system bus input word is currently not used, but can be connected in the technology application by the user.
0x5021:167	System bus diagnostics: Output data word 7 • Read only	

6.5.2.1 Master value output

The system bus is used to distribute process data in the network.

A technology application can provide its own setpoints and actual values or the setpoints and actual values of an encoder optionally connected via slot (B) for other technology applications. The values are transmitted independently of the role of the station in the system bus (master or slave). The values are set via the parameter **Master value output of system bus**. Each node sends the values.

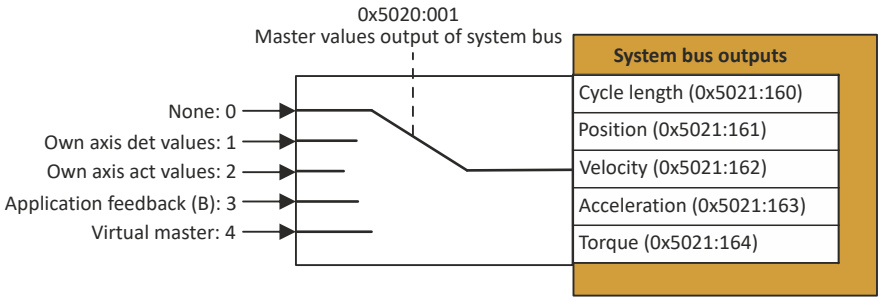

Fig. 28: Selection of the source for the master value output

The "Virtual Master: 4" is selectable in the following technology applications:

- **Electronic gearbox**
- **Sync and correction**
- **Cross cutter**

6.5.2.2 Source of touch probe time stamp

The **Source touch probe system bus** parameter is used to set the source of the touch probe time stamp. ▸ 0x5020:011

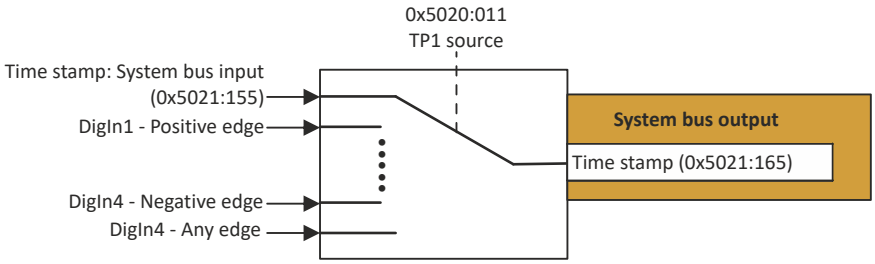

Fig. 29: Selection of the source of the touch probe time stamp

Parameter

Address	Name / setting range / [default setting]		Information
0x5020:011	TP1 source		The sensor source and the edge to be evaluated are selected via the parameter (rising, falling, any)
	0	External source	Source: System bus
	1	Digital input 1, positive edge	
	2	Digital input 1, negative edge	
	3	Digital input 1, any edge	
	11	**Digital input 2, positive edge**	
	12	Digital input 2, negative edge	
	13	Digital input 2, any edge	
	21	Digital input 3, positive edge	
	22	Digital input 3, negative edge	
	23	Digital input 3, any edge	
	31	Digital input 4, positive edge	
	32	Digital input 4, negative edge	
	33	Digital input 4, any edge	
0x5021:155	System bus diagnostics: Time stamp (input value) • Read only: x ns		Time stamp of the master axis
0x5021:165	System bus diagnostics: Time stamp (output value) • Read only: x ns		Time stamp of the touchprobe source in ns selected via **source TP1** 0x5020:011.

6.5.3 Distribution of the master values by the master

The parameter settings for distributing the master values must be configured in the system bus master.

In standard cases, no additional configuration needs to be performed for the slaves.

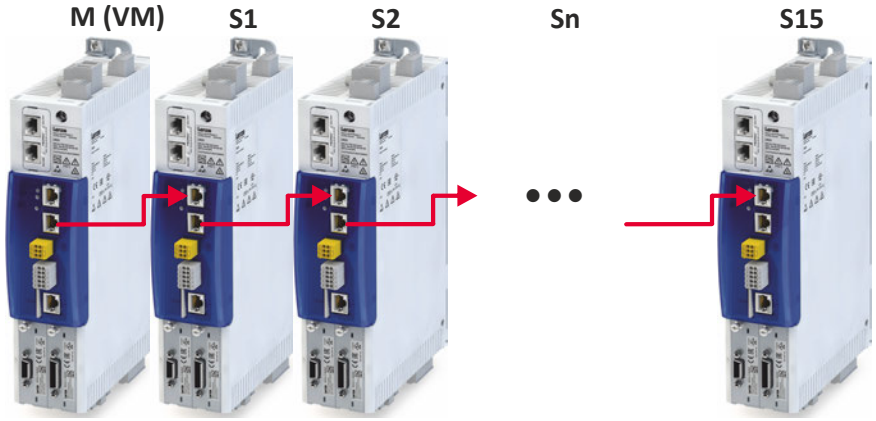

Fig. 30: Distribution of master values via the master

Application examples:

- Example: System bus master is master value master 📖 96
- Example: System bus slave is master value master 📖 97
- Example: Using time stamp of another axis 📖 98

6.5.3.1 Example: System bus master is master value master

In der Regel ist der Systembusmaster der Leitwertmaster. Alle weiteren Systembusteilnehmer (Slaves) erhalten einen identischen Leitwert vom Master.

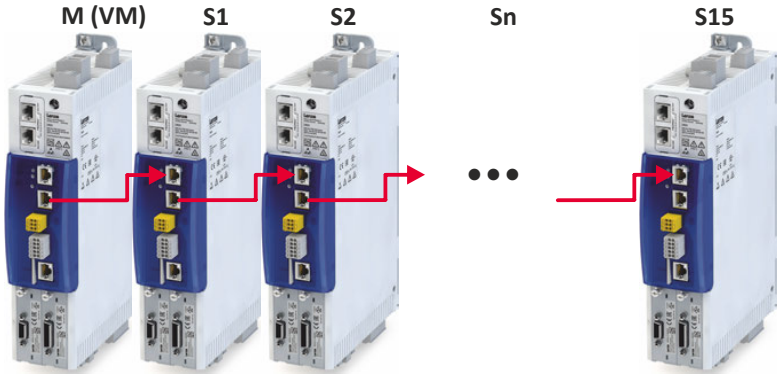

Fig. 31: Example 1 - System bus master is master value master

M System bus master
VM Virtual master
S Slave

In the system bus master, the available virtual master is used to generate master values. The master values generated there are the master values for all system bus nodes so that all parameters of the system bus matrix are set to "master" (default setting).

System bus Input words		Master	Slave 1	Slave 2	...	Slave 15
00	Cycle length of the master axis (0x5021:150)	0x5021:010 01: Master			...	0x5021:010 01: Master
01	Master position value (0x5021:151)					
02	Master speed value (0x5021:152)					
03	Master acceleration value (0x5021:153)					
04	Torque of the master axis (0x5021:154)	0x5021:020 01: Master	0x5021:021 01: Master	0x5021:022 01: Master		0x5021:035 01: Master
05	Time stamp of the master axis (0x5021:155)	0x5021:040 01: Master	0x5021:041 01: Master	0x5021:042 01: Master		0x5021:055 01: Master
06	Free input word (0x5021:156)	0x5021:060 01: Master	0x5021:061 01: Master	0x5021:062 01: Master		0x5021:075 01: Master
07	Free input word (0x5021:157)	0x5021:080 01: Master	0x5021:081 01: Master	0x5021:082 01: Master		0x5021:095 01: Master

Tab. 2: System bus matrix

Example of interpreting the table

The "torque of the master axis (0x5021:154)" for "slave 2" is included in the 0x5021:022 parameter.

6.5.3.2 Example: System bus slave is master value master

If the system bus master is not the master value master, the parameter **Parameter source for wörds 0 … 3** must be set to the corresponding source. 0x5021:010

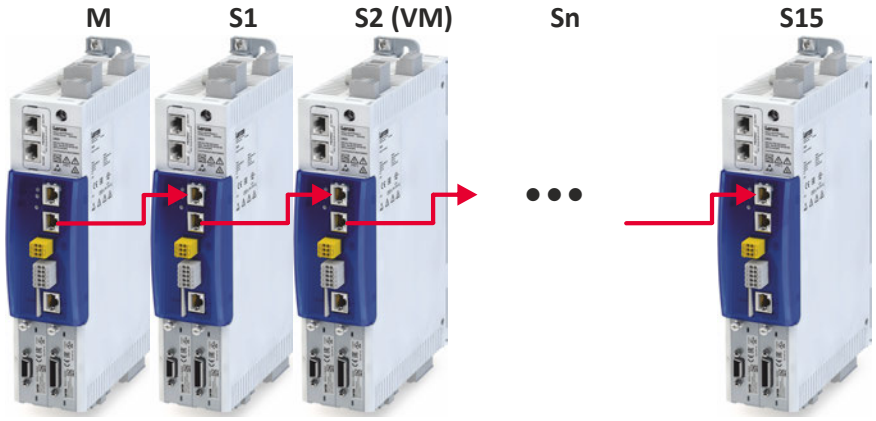

Fig. 32: Example 2 - System bus slave is master value master

M System bus master S Slave
VM Virtual master

If the virtual master for master value generation is not used in the system bus master (▸ Example: System bus master is master value master) but in slave 2 (S2), the parameter **Parameter source for words 0 … 3** must be set to **Slave 2 [3]** . 0x5021:010

System bus Input words		**Master**	**Slave 1**	**Slave 2**	. . .	**Slave 15**
00	Cycle length of the master axis (0x5021:150)					
01	Master position value (0x5021:151)		**0x5021: 010 03: Slave 2**			**0x5021:010 03: Slave 2**
02	Master speed value (0x5021:152)					
03	Master acceleration value (0x5021:153)					
04	Torque of the master axis (0x5021:154)	0x5021:020 01: Master	0x5021:021 01: Master	0x5021:022 01: Master	. . .	0x5021:035 01: Master
05	Time stamp of the master axis (0x5021:155)	0x5021:040 01: Master	0x5021:041 01: Master	0x5021:042 01: Master		0x5021:055 01: Master
06	Free input word (0x5021:156)	0x5021:060 01: Master	0x5021:061 01: Master	0x5021:062 01: Master		0x5021:075 01: Master
07	Free input word (0x5021:157)	0x5021:080 01: Master	0x5021:081 01: Master	0x5021:082 01: Master		0x5021:095 01: Master

6.5.3.3 Example: Using time stamp of another axis

The touch probe time stamp of the technology application **Sync and correction** (S1) is to be used by the technology application **Table Positioning** (S2). The master value master is the virtual master in the system bus master.

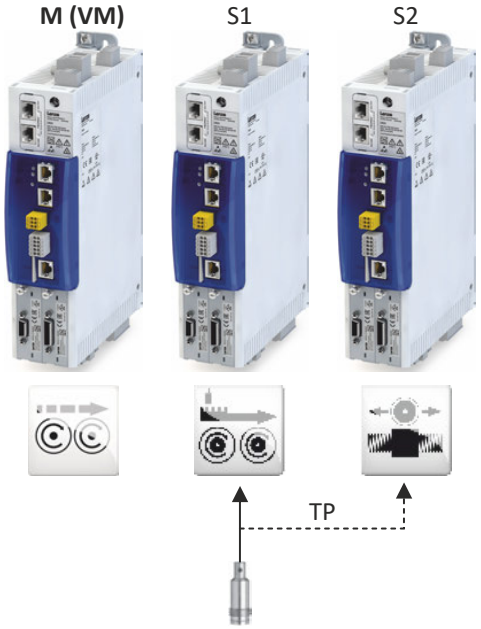

Fig. 33: Example 3 - Using the timestamp of another axis

M	System bus master	S	Slave
VM	Virtual master	TP	Touch probe

In order to allow the time stamp of Slave 1 to be used by Slave 2 as well, the parameter **Parameter source for word 5 (Slave 2)** must be set to **Slave 1 [2]** (see following table).
0x5021:042

System bus Input words		**Master**	**Slave 1**	**Slave 2**	**...**	**Slave 15**
00	Cycle length of the master axis (0x5021:150)	0x5021: 010 01: Master			...	0x5021:010 01: Master
01	Master position value (0x5021:151)					
02	Master speed value (0x5021:152)					
03	Master acceleration value (0x5021:153)					
04	Torque of the master axis (0x5021:154)	0x5021:020 01: Master	0x5021:021 01: Master	0x5021:022 01: Master		0x5021:035 01: Master
05	Time stamp of the master axis (0x5021:155)	0x5021:040 01: Master	0x5021:041 01: Master	**0x5021:042 02: Slave 1**		0x5021:055 01: Master
06	Free input word (0x5021:156)	0x5021:060 01: Master	0x5021:061 01: Master	0x5021:062 01: Master		0x5021:075 01: Master
07	Free input word (0x5021:157)	0x5021:080 01: Master	0x5021:081 01: Master	0x5021:082 01: Master		0x5021:095 01: Master

As shown in the table, the parameters 0x5021:020 ... 095 can also be used for the distribution of the torque values and for specific data from the technology application.

6.6 Monitoring

Parameter

Address	Name / setting range / [default setting]		Information
0x500B:100	Setpoint monitoring		
	false	Inactive	
	true	Active	

7 Configuring the "Speed Control" TA

In addition to the basic settings for kinematics and the motion functions, the technology application offers the following functions for setting up or continuously moving an axis:

- Selecting the setpoint source 118
- Starting and stopping speed operation 120
- Speed operation with preset setpoints 124
- Inverting the setpoint 125
- Connecting the velocity offset 127
- Connecting the speed override 129

The technology application can also be used for the status and error display or for resetting an error.

Settings in the »EASY Starter«:

- Tab **Settings** - Parameter dialog **Technology application**
- Application selection: 0x4000

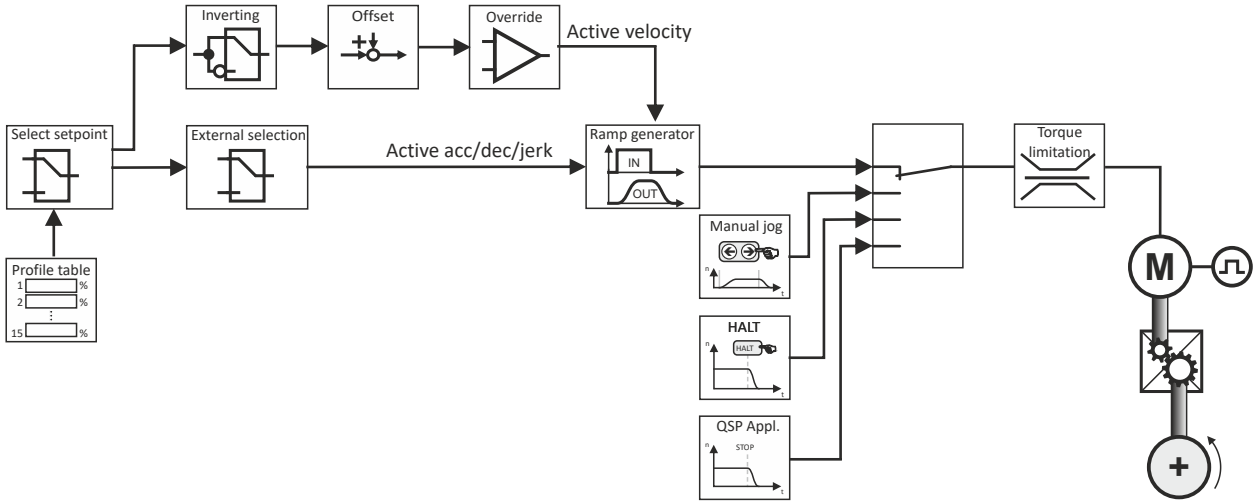

Fig. 34: Block diagram "Speed Control" technology application

7.1 Control settings

Relevant parameters of other functions

Address	Name	Default setting	Setting range
0x4001	Interface selection	**Fieldbus network [0]**	Selection list
0x5020:006	Source of homing switch	**Digital input 1 [2]**	Selection list
0x5020:007	Application quick stop source	**FALSE [0]**	Selection list
0x5020:008	Source of fault reset	**FALSE [0]**	Selection list
0x5020:030	Source of digital output 1	**Ready to switch on [0]**	Selection list
0x5030:003	Effect of external torque limit	**Positive and negative direction [0]**	Selection list

7.2 Interface

The control words and status words are already preset:

- Control signals 📖 102
- Status signals 📖 103

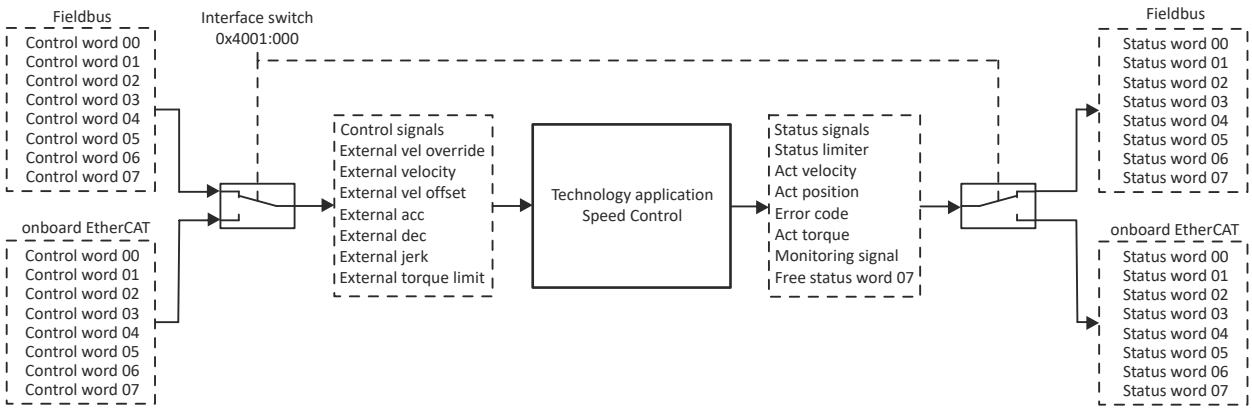

Fig. 35: Principle signal flow of the control signals and status signals within the technology application

7.2.1 Control signals

Parameter

Address	Name / setting range / [default setting]		Information
0x5030:010	Control signals 0x00000000 ... [**0x00000000**] ... 0xFFFFFFFF		Control signals
	Bit 0	Control bit 00 (reserved)	Bit without function
	Bit 1	Control bit 01 (reserved)	
	Bit 2	Activate application quick stop	Rotating drive is stopped via the quick stop ramp. The drive remains controlled at standstill.
	Bit 3	Enable operation	Drive is enabled. With a LOW level, a rotating drive is stopped via the quick stop ramp and is inhibited at a standstill.
	Bit 4	Control bit 04 (reserved)	Bit without function
	Bit 5	Manual jog positive	In manual operation, the drive travels in positive direction. The drive stops when the positive software limit switch is reached.
	Bit 6	Manual jog negative	In manual operation, the drive travels in negative direction. The drive stops when the negative software limit switch is reached.
	Bit 7	Fault reset	Errors are reset when the causes are eliminated.
	Bit 8	Halt	A stop is triggered in the application.
	Bit 9	Start homing	Start homing.
	Bit 10	Reset home position	Reset status information "home position known".
	Bit 11	Abort	• The active movement is canceled. • The axis is guided to standstill via the active profile deceleration. • The axis changes to "STOP". The deceleration is canceled when a new movement is instructed.
	Bit 12	Control bit 12 (reserved)	Bit without function
	Bit 13	Activate velocity overrride	External speed override is activated.
	Bit 14	Open brake manually	The holding brake is opened.
	Bit 15	Control bit 15 (reserved)	Bit without function
	Bit 16	Profile number bit 0	These bits are used for the bit-coded profile selection. Bit 0 represents the decimal 1. Bit 1 represents the decimal 2. Bit 2 represents the decimal 4. Bit 3 represents the decimal 8.
	Bit 17	Profile number bit 1	
	Bit 18	Profile number bit 2	
	Bit 19	Profile number bit 3	
	Bit 20	Enable velocity operation	The speed operation is started.
	Bit 21	Invert direction of rotation	The rotating direction is inverted.
	Bit 22	Disable PID controller	The PID controller is deactivated.
	Bit 23	Control bit 23 (reserved)	Bit without function
	Bit 24	Control bit 24 (reserved)	
	Bit 25	Control bit 25 (reserved)	
	Bit 26	Control bit 26 (reserved)	
	Bit 27	Control bit 27 (reserved)	
	Bit 28	Activate external velocity offset	The external velocity offset is activated.
	Bit 29	Activate profile velocity	The external profile speed is used.
	Bit 30	Activate external acceleration/deceleration/ jerk	External acceleration and decleration values and an external jerk are activated.
	Bit 31	Activate external torque limits	The external torque limits are activated.
0x5030:011	External velocity override 0.00 ... [**0.00**] ... 100.00 %		Change of the profile speed during a positioning process.
0x5030:012	External velocity -214748.3648 ... [**0.0000**] ... 214748.3647		Value for the external setpoint velocity.
0x5030:013	External velocity offset -214748.3648 ... [**0.0000**] ... 214748.3647		Value for the external velocity offset.
0x5030:014	External acceleration 0.00 ... [**0.00**] ... 21474836.47		Value for the external acceleration.
0x5030:015	External deceleration 0.00 ... [**0.00**] ... 21474836.47		Value for the external deceleration.
0x5030:016	External jerk 0.00 ... [**0.00**] ... 21474836.47		Value for the external jerk.

Address	Name / setting range / [default setting]	Information
0x5030:017	External torque limit 0.00 ... [**0.00**] ... 21474836.47 %	Value of the external torque limit. Reference: Rated motor torque0x6076

7.2.2 Status signals

Parameter

Address	Name / setting range / [default setting]		Information
0x5030:110	Status signals 0x00000000 ... [**0x00000000**] ... 0xFFFFFFFF		
	Bit 0	Ready for operation	Axis ready for switch-on.
	Bit 1	Homing active	Homing is active.
	Bit 2	Operation enabled	Axis is enabled.
	Bit 3	Fault	An error is active.
	Bit 4	Homing done	Homing was completed successfully.
	Bit 5	Application quick stop active	Quick stop was triggered.
	Bit 6	Manual jog active	Manual operation is active.
	Bit 7	Warning	A warning is active.
	Bit 8	Halt active	A stop was triggered in the application.
	Bit 9	Motor control in limitation	The motor control is in limitation.
	Bit 10	Set velocity reached	Actual velocity = setpoint velocity
	Bit 11	Abort busy	The active movement is canceled.
	Bit 12	Standstill	Standstill reached.
	Bit 13	Direction of rotation inverted	Direction of rotation is inverted.
	Bit 14	Brake opened	The holding brake is open.
	Bit 15	STO active	Safe Torque Off is active.
	Bit 16	Active profile bit 0	Active profile (bit-coded). Bit 0 represents the decimal 1. Bit 1 represents the decimal 2. Bit 2 represents the decimal 4. Bit 3 represents the decimal 8.
	Bit 17	Active profile bit 1	
	Bit 18	Active profile bit 2	
	Bit 19	Active profile bit 3	
	Bit 20	Velocity operation active	Speed operation is active.
	Bit 21	Setpoint generation done	Ramp generation completed.
	Bit 22	PID controller active	The PID controller is active.
	Bit 23	Status bit 23 (reserved)	Bit without function
	Bit 24	Status bit 24 (reserved)	
	Bit 25	Status bit 25 (reserved)	
	Bit 26	Status bit 26 (reserved)	
	Bit 27	Torque setpoint limited	The setpoint torque is in limitation.
	Bit 28	External velocity offset active	The external velocity offset is active.
	Bit 29	Profile velocity active	A profile velocity is active.
	Bit 30	External acceleration/deceleration/jerk active	External acceleration values, external deceleration values, and the external jerk are active.
	Bit 31	External torque limit active	The external torque limits are active.

Address	Name / setting range / [default setting]		Information
0x5030:111	Status signals limiter 0x00000000 ... [**0x00000000**] ... 0xFFFFFFFF		Extended Safety - status of the monitoring functions
	Bit 0	STO active	Safe torque off (STO) active. The axis is safely switched to torqueless operation.
	Bit 1	SS1 active	Safe stop 1 (SS1) active. Subsequently, the drive is torqueless (STO).
	Bit 2	SS2 active	Safe stop 2 (SS2) active. The drive then changes to the safe operational stop (SOS).
	Bit 3	SOS active	Safe operational stop (SOS) active. The reached position is actively held.
	Bit 4	SLS1 active	Safely limited speed (SLS1) active. The travel profile changes according to the parameters set for it.
	Bit 5	SLS2 active	Safely limited speed (SLS2) active. The travel profile changes according to the parameters set for it.
	Bit 6	SLS3 active	Safely limited speed (SLS3) active. The travel profile changes according to the parameters set for it.
	Bit 7	SLS4 active	Safely limited speed (SLS4) active. The travel profile changes according to the parameters set for it.
	Bit 8	SDpos active	Safe direction (SDI) active. Only the positive direction is allowed.
	Bit 9	SDneg active	Safe direction (SDI) active. Only the negative direction is allowed.
	Bit 10	SLI active	Safely limited increment (SLI) active. A maximum permissible change in position is monitored.
	Bit 11	SSE active	Safe stop emergency (SSE) active.
	Bit 12	ES active	Enable switch (ES) active. The stop functions in special mode are overridden.
	Bit 13	OMS active	Operation mode selector (OMS) active. Special operation is active.
0x5030:112	Actual velocity -214748.3648 ... [**0.0000**] ... 214748.3647		Display of the actual velocity
0x5030:113	Status word 3 (reserved) -214748.3648 ... [**0.0000**] ... 214748.3647		Word without function
0x5030:114	Error code 0 ... [**0**] ... 4294967295		Display of the current error number.
0x5030:115	Actual torque -214748.3648 ... [**0.0000**] ... 214748.3647 Nm		Display of the actual torque
0x5030:116	Display value 1 0 ... [**0**] ... 4294967295		Display of the monitor signal "Display value 1" Selection: ▸ 0x5030:006
0x5030:117	Display value 2 0 ... [**0**] ... 4294967295		Display of the monitor signal "Display value 2" Selection: ▸ 0x5030:007

7.2.3 Simulation of the interface

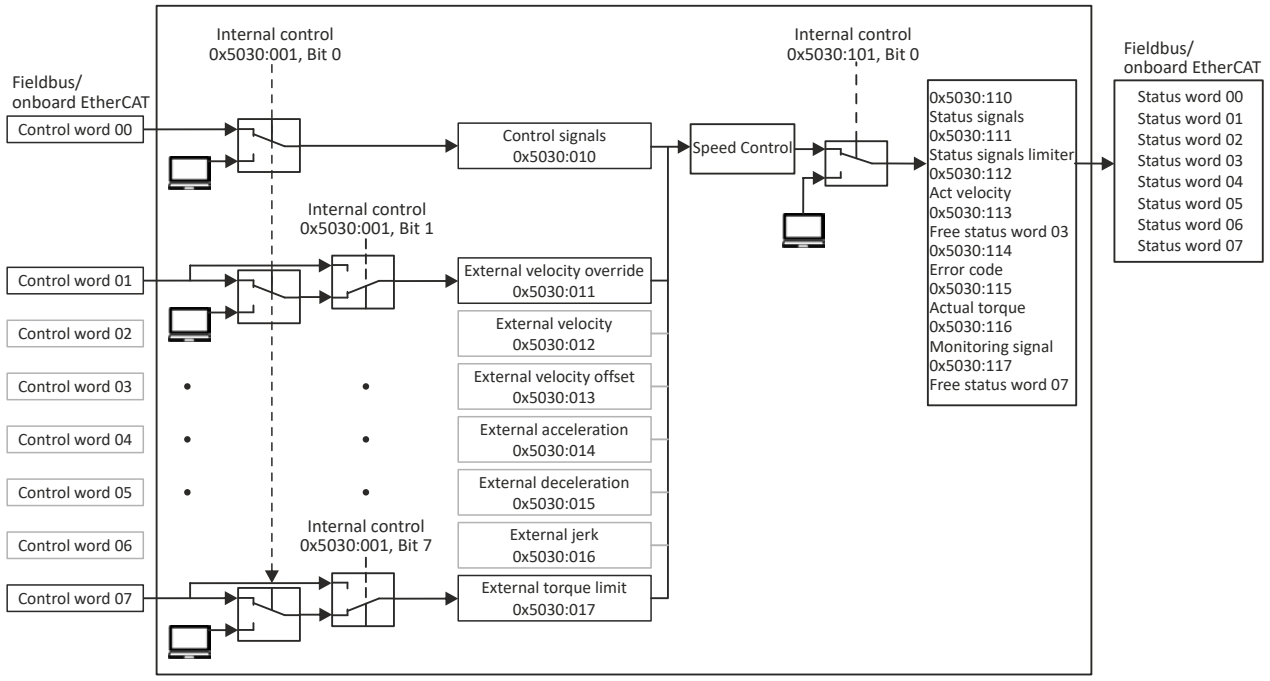

Fig. 36: Signal flow in the simulation of the technology interface

The technology interface is simulated (manually operated) via the parameters **Manual control (bits 0 ... 7)** and **Simulation of status signals (bit 0)**.

Status bit 0 activates the simulation of the entire technology interface and changes over all control words. Data from the fieldbus/system bus no longer enter the technology application. Via the control bits 1 ... 7, individual control words can once again be connected to the fieldbus/system bus.

Change-over parameters

- Status bit 0 ▸ 0x5030:101
- Control bits 1 ... 7 ▸ 0x5030:001

Parameter

Address	Name / setting range / [default setting]		Information
0x5030:001	Simulation of control signals 0x00 ... [**0x00**] ... 0xFF		
	Bit 0	Enable control signal simulation	TRUE: The simulation of the control signals is activated. FALSE: The control signals are transmitted via the active network interface.
	Bit 1	Activate simulation of control word 1	TRUE: The simulation of control word 1 is activated. FALSE: The control word is transmitted via the active network interface.
	Bit 2	Activate simulation of control word 2	TRUE: Simulation of control word 2 is activated. FALSE: The control word is transmitted via the active network interface.
	Bit 3	Activate simulation of control word 3	TRUE: Simulation of control word 3 is activated. FALSE: The control word is transmitted via the active network interface.
	Bit 4	Activate simulation of control word 4	TRUE: Simulation of control word 4 is activated. FALSE: The control word is transmitted via the active network interface.
	Bit 5	Activate simulation of control word 5	TRUE: Simulation of control word 5 is activated. FALSE: The control word is transmitted via the active network interface.
	Bit 6	Activate simulation of control word 6	TRUE: Simulation of control word 6 is activated. FALSE: The control word is transmitted via the active network interface.
	Bit 7	Activate simulation of control word 7	TRUE: Simulation of control word 7is activated. FALSE: The control word is transmitted via the active network interface.

Address	Name / setting range / [default setting]		Information
0x5030:101	Simulation of status signals 0x00 ... [**0x00**] ... 0xFF		
	Bit 0	Enable status signal simulation	TRUE: The simulation of the status signals is activated. FALSE: The status signals are transmitted via the active network interface.

7.3 Travel profiles

For a maximum of 15 travel profiles, values for speed, acceleration, deceleration and jerk can be configured. The travel profiles are bit-coded.

Settings in »EASY Starter«:

- **Settings** tab - Parameters dialog **Profiles**

Select profile ▸ 0x5030:010					Profile parameters			
Bit 19	**Bit 18**	**Bit 17**	**Bit 16**	**Profile**	**Profile speed**	**Profile acceleration**	**Profile deceleration**	**Profile jerk**
FALSE	FALSE	FALSE	FALSE	No profile selected				
FALSE	FALSE	FALSE	TRUE	Profile 1	0x5031:023, 034, 045, 056, 067, 078, 089, 100, 111, 122, 133, 144, 155, 166, 177	0x5031:024, 035, 046, 057, 068, 079, 090, 101, 112, 123, 134, 145, 156, 167, 178	0x5031:025, 036, 047, 058, 069, 080, 091, 102, 113, 124, 135, 146, 157, 168, 179	0x5031:026, 037, 048, 059, 070, 081, 092, 103, 114, 125, 136, 147, 158, 169, 180
FALSE	FALSE	TRUE	FALSE	Profile 2	0x5031:034	0x5031:035	0x5031:036	0x5031:037
FALSE	FALSE	TRUE	TRUE	Profile 3	0x5031:045	0x5031:046	0x5031:047	0x5031:048
FALSE	TRUE	FALSE	FALSE	Profile 4	0x5031:056	0x5031:057	0x5031:058	0x5031:059
FALSE	TRUE	FALSE	TRUE	Profile 5	0x5031:067	0x5031:068	0x5031:069	0x5031:070
FALSE	TRUE	TRUE	FALSE	Profile 6	0x5031:078	0x5031:079	0x5031:080	0x5031:081
FALSE	TRUE	TRUE	TRUE	Profile 7	0x5031:089	0x5031:090	0x5031:091	0x5031:092
TRUE	FALSE	FALSE	FALSE	Profile 8	0x5031:100	0x5031:101	0x5031:102	0x5031:103
TRUE	FALSE	FALSE	TRUE	Profile 9	0x5031:111	0x5031:112	0x5031:113	0x5031:114
TRUE	FALSE	TRUE	FALSE	Profile 10	0x5031:122	0x5031:123	0x5031:124	0x5031:125
TRUE	FALSE	TRUE	TRUE	Profile 11	0x5031:133	0x5031:134	0x5031:135	0x5031:136
TRUE	FALSE	FALSE	FALSE	Profile 12	0x5031:144	0x5031:145	0x5031:146	0x5031:147
TRUE	TRUE	FALSE	FALSE	Profile 13	0x5031:155	0x5031:156	0x5031:157	0x5031:158
TRUE	TRUE	TRUE	FALSE	Profile 14	0x5031:166	0x5031:167	0x5031:168	0x5031:169
TRUE	TRUE	TRUE	TRUE	Profile 15	0x5031:177	0x5031:178	0x5031:179	0x5031:180

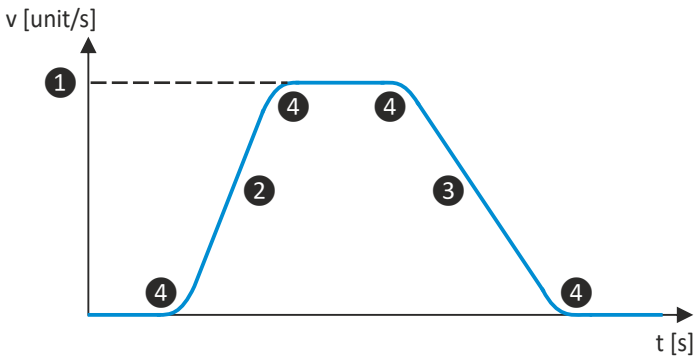

Fig. 37: Travel profile parameter

(1) Speed
(2) Acceleration
(3) Deceleration
(4) Jerk

Symbol	Profile parameters
1	**Speed profiles 0 ... 15** The maximum velocity used for approaching the target position. • The speed profile is dependent on the acceleration or deceleration. • It is possible that the drive does not reach the maximum velocity. In this case, the graph is shown as a triangle instead of a trapezium.
2	**Acceleration profiles 0 ... 15** The acceleration to reach the maximum velocity. A distinction is made between two types of acceleration:
	• Linearly increasing speed 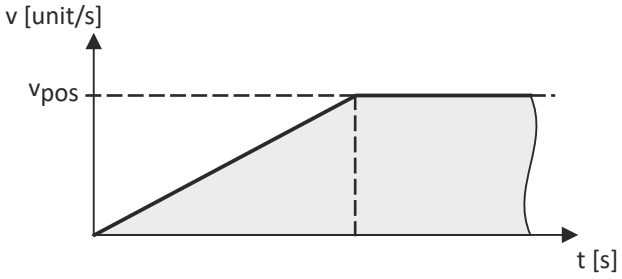
	• S-shaped increase in speed 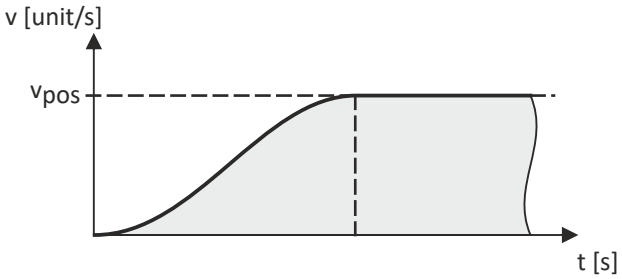
3	**Deceleration profiles 0 ... 15** The deceleration to brake from the maximum velocity to a standstill.
4	**Jerk profiles 0 ... 15** Jerk limitation for acceleration or deceleration. If a jerk limitation is given for a travel profile, acceleration and/or deceleration are executed more smoothly via S-shaped ramps. • This protects sensitive machine parts against damage. • The S-shaped acceleration and deceleration extend the duration of positioning compared to linear acceleration and deceleration.
	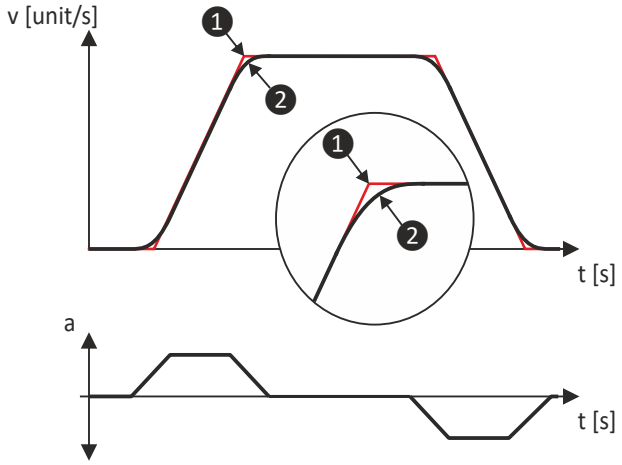 1 Profile without jerk limitation 2 Profile with jerk limitation

Parameter

Address	Name / setting range / [default setting]	Information
0x5031:003	Velocity profile 0 -214748.3648 ... [**0.0000**] ... 214748.3647	The speed for profile 0 is resolved with 4 decimal positions.

Address	Name / setting range / [default setting]	Information
0x5031:004	Acceleration profile 0 0.00 ... [**100.00**] ... 21474836.47	The acceleration for profile 0 is resolved with 2 decimal positions.
0x5031:005	Deceleration profile 0 0.00 ... [**100.00**] ... 21474836.47	The deceleration for profile 0 is resolved with 2 decimal positions.
0x5031:006	Jerk profile 0 0.00 ... [**100000.00**] ... 21474836.47	The jerk for profile 0 is displayed with 2 decimal positions.
0x5031:023, 034, 045, 056, 067, 078, 089, 100, 111, 122, 133, 144, 155, 166, 177	Profile velocity -214748.3648 ... [**0.0000**] ... 214748.3647	Maximum speed at which the target position is approached. The maximum speed depends on the target position, the acceleration and the deceleration. If the graph is a triangle, the drive has not reach the maximum speed. 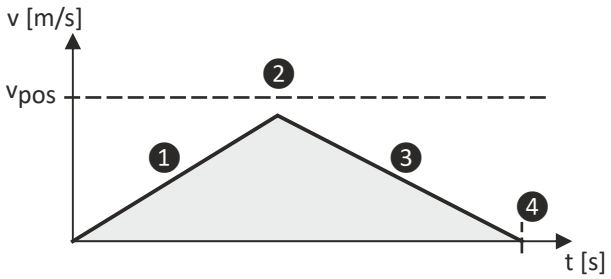 1 Acceleration 2 Maximum speed 3 Deceleration 4 Target position
0x5031:024, 035, 046, 057, 068, 079, 090, 101, 112, 123, 134, 145, 156, 167, 178	Profile acceleration 0.00 ... [**100.00**] ... 21474836.47	Acceleration to reach the maximum speed. The following acceleration types are distinguished: • Linearly increasing acceleration 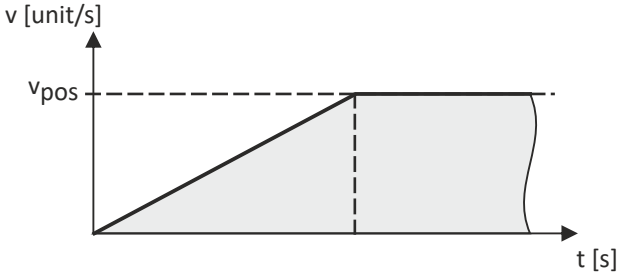 • Acceleration increasing in S-shape 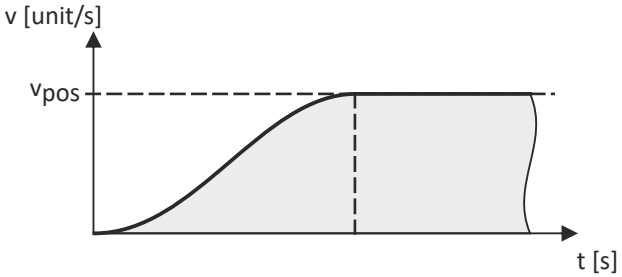
0x5031:025, 036, 047, 058, 069, 080, 091, 102, 113, 124, 135, 146, 157, 168, 179	Profile deceleration 0.00 ... [**100.00**] ... 21474836.47	Deceleration to brake from the maximum speed to standstill.

Address	Name / setting range / [default setting]	Information
0x5031:026, 037, 048, 059, 070, 081, 092, 103, 114, 125, 136, 147, 158, 169, 180	Profile jerk 0.00 ... [**100000.00**] ... 21474836.47	Jerk limitation for the acceleration and deceleration. If a jerk limitation is given for a travel profile, the acceleration and deceleration are executed via S-shaped ramps. • S-shaped ramps protect machine parts from damages. • The S-shaped acceleration and deceleration extend the duration of positioning compared to linear acceleration and deceleration. 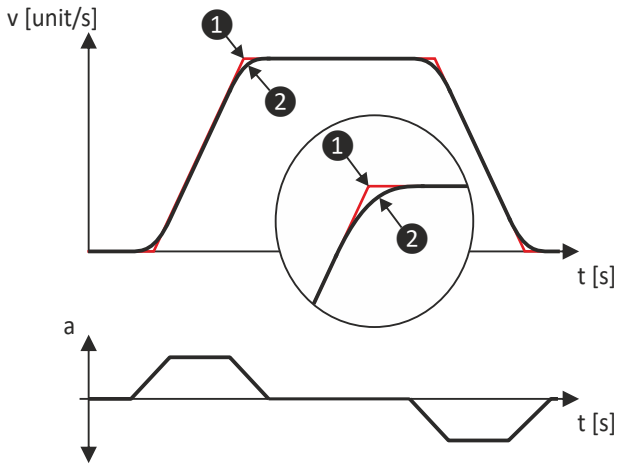 Profile without jerk limitation Profile with jerk limitation
0x5032:011	Active Profile • Read only	
0x5032:012	Active profile: acceleration setpoint • Read only	The acceleration setpoint is specified in the unit [unit/s^2]. The acceleration setpoint is terminated with 2 decimal positions.
0x5032:013	Active profile: deceleration setpoint • Read only	The deceleration setpoint is specified in the unit [unit/s^2]. The deceleration setpoint is terminated with 2 decimal positions.
0x5032:014	Active profile: jerk setpoint • Read only	The jerk setpoint is specified in the unit [unit/s^2]. The jerk setpoint is terminated with 2 decimal positions.
0x5032:015	Active profile: Velocity setpoint • Read only	The profile setpoint speed is given in the unit [unit/s]. The value of the profile setpoint speed is displayed with 4 decimal positions.
0x5032:025	Selected profile • Read only	

7.4 External travel profile parameters

Acceleration, deceleration and jerk values can be defined via one of 15 travel profiles or via external control signals.

▸ Travel profiles 📖 107

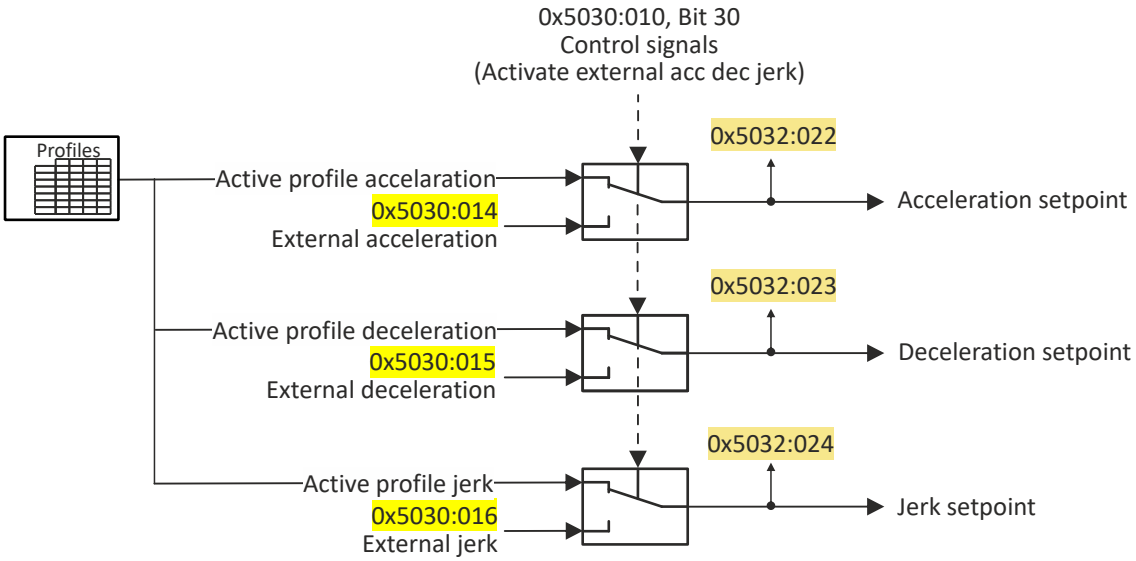

Fig. 38: Using external acceleration and deceleration values

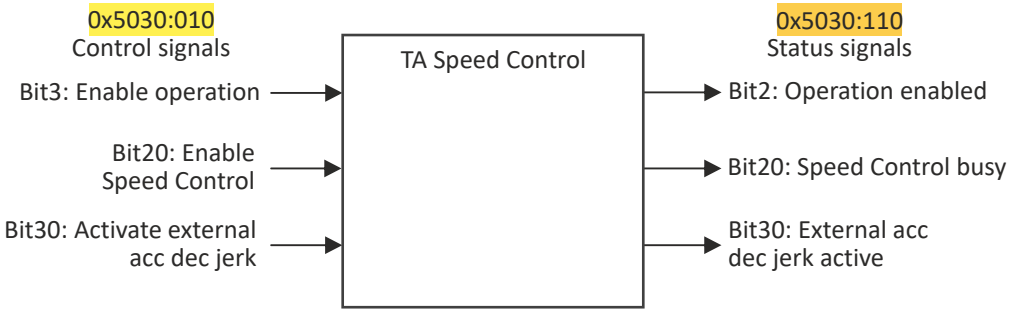

Fig. 39: Control and status bits used

Execution

- **Control bit 30** must be set to TRUE for this purpose. ▸ 0x5030:010 Bit 30
- **Status bit 30** indicates whether this function is active. ▸ 0x5030:110 Bit 30
- The values are defined via the following parameters:
  - ▸ 0x5030:014 (External acceleration)
  - ▸ 0x5030:015 (External deceleration)
  - ▸ 0x5030:016 (External jerk)
- The acceleration, deceleration and jerk values are resolved with two decimal positions. For instance, if an acceleration of 100 [units/s²] is to be specified, the value 10000 must be specified via the **External acceleration** parameter.
- The parameters displayed for the setpoint acceleration, setpoint deceleration and setpoint jerk are as follows:
  - ▸ 0x5032:022 (Setpoint acceleration)
  - ▸ 0x5032:023 (Setpoint deceleration)
  - ▸ 0x5032:024 (Setpoint jerk)

Parameter

Address	Name / setting range / [default setting]	Information
0x5030:012	External velocity -214748.3648 ... [**0.0000**] ... 214748.3647	Value for the external setpoint velocity.

Address	Name / setting range / [default setting]	Information
0x5030:014	External acceleration 0.00 ... [**0.00**] ... 21474836.47	Value for the external acceleration.
0x5030:015	External deceleration 0.00 ... [**0.00**] ... 21474836.47	Value for the external deceleration.
0x5030:016	External jerk 0.00 ... [**0.00**] ... 21474836.47	Value for the external jerk.
0x5032:021	Velocity setpoint • Read only	
0x5032:022	Acceleration setpoint • Read only	
0x5032:023	Deceleration setpoint • Read only	
0x5032:024	Jerk setpoint • Read only	

Example

The following example shows the use of the **External acceleration** and **External deceleration** control signals.

The two control signals are activated via control bit 30.

The preselected setpoint velocity is 1000 units/s and the axis is accelerated at a rate of 100 units/s^2 based on the profile data. During the acceleration phase, the external acceleration and deceleration values are activated (**external acceleration** = **external deceleration** = 1000 units/s^2). As a result of this change-over, the external values start being used immediately.

The **Setpoint acceleration** and **Setpoint deceleration** signal flow parameters show which acceleration and deceleration values are active. When the setpoint velocity has been reached, the external values are deactivated again. The profile data are then active again.

The setpoint velocity is set to zero. The axis starts to decelerate at 100 units/s^2. During the delay, the external values are activated again. The axis is guided to standstill with a deceleration of 1000 units/s^2.

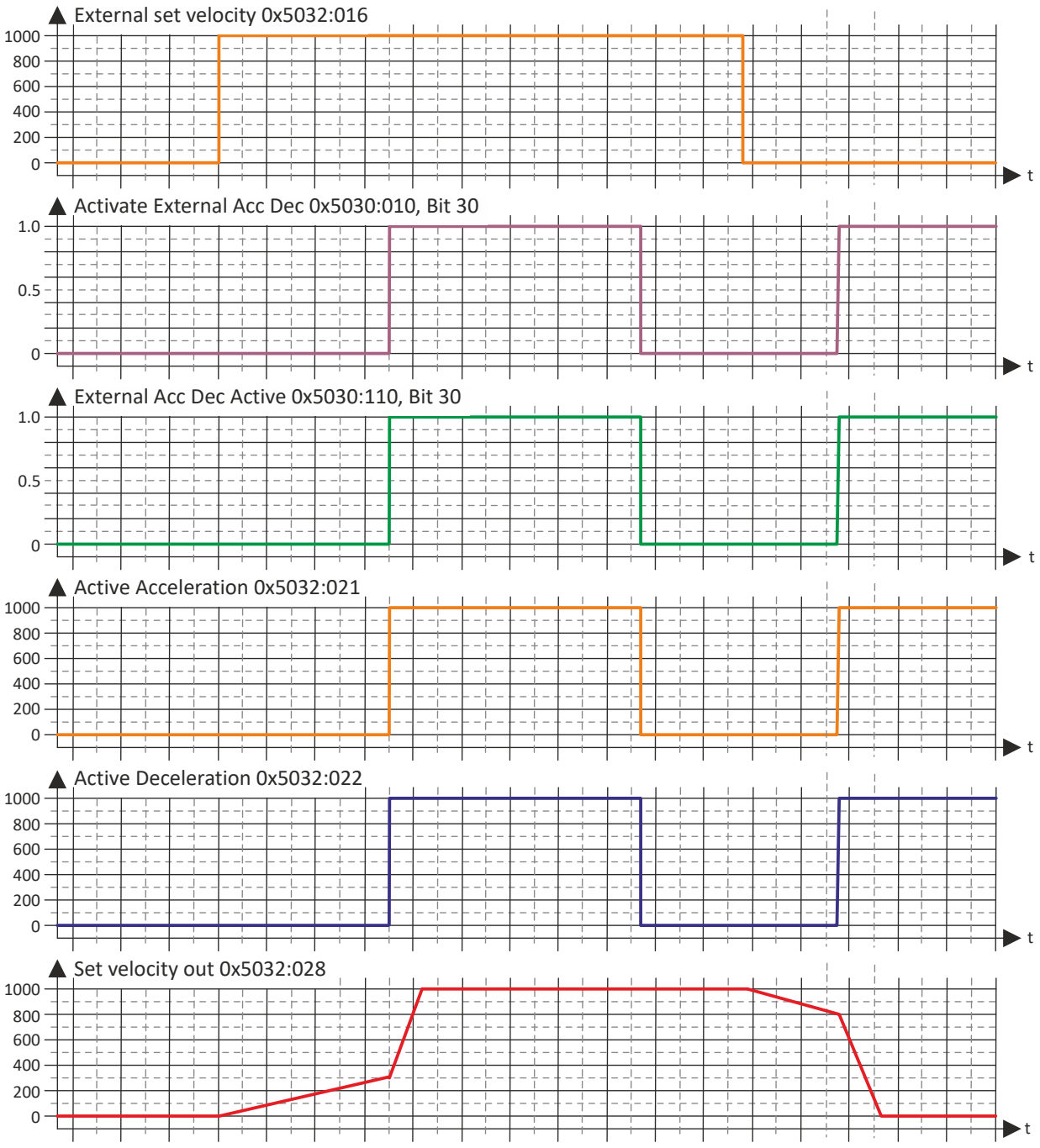

Fig. 40: Setpoint velocity timing diagram

7.5 Signal flow

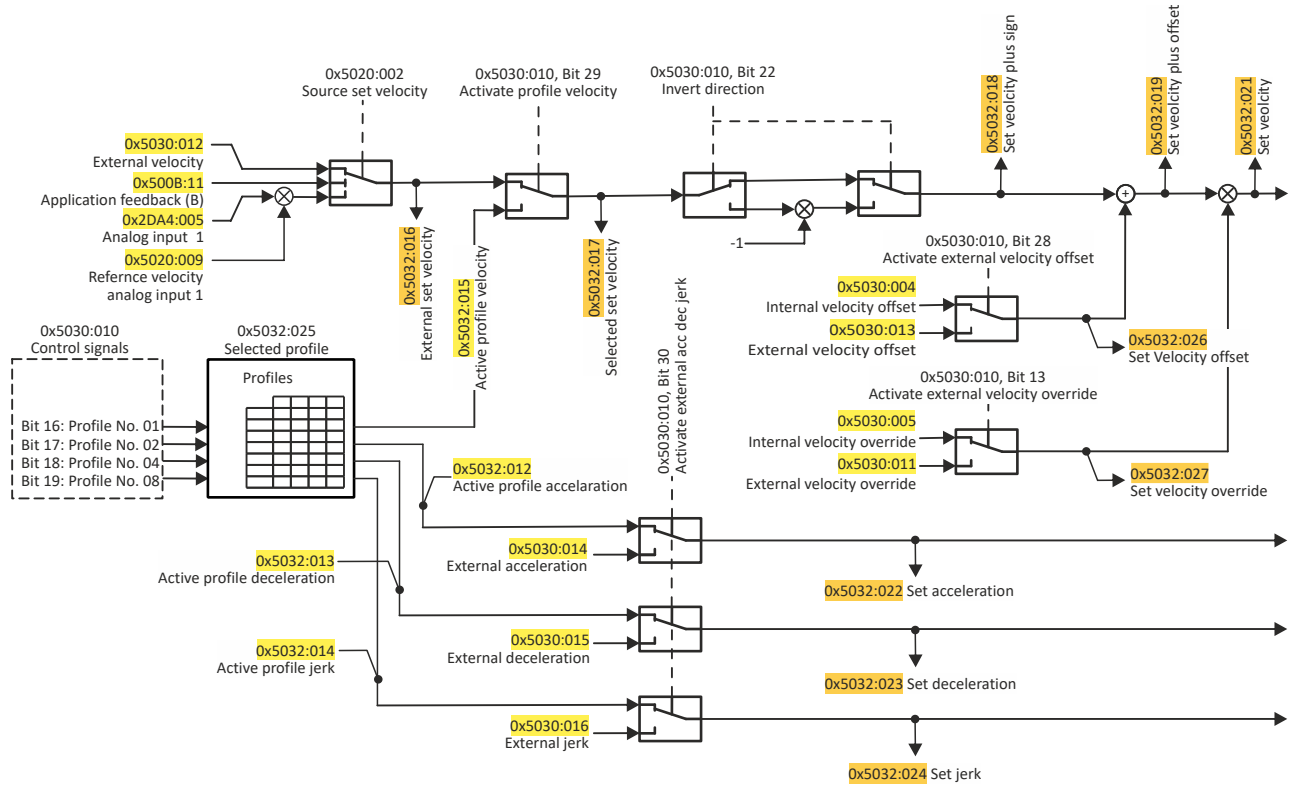

Fig. 41: Signal flow of speed control function

Settings in the »EASY Starter«:

- Tab **Settings** - Parameter dialog **Signal flow**

Relevant parameters of other functions

Address	Name	Default setting	Setting range
0x2DA4:005	Diagnostics of analog input 1: Scaled percent value	x.xx % (Read only)	
0x500B:011	Actual velocity	- (Read only)	
0x5020:009	Reference velocity for analog input 1	**500.0000**	0.0000 ... 214748.3647
0x5030:004	Internal velocity offset	**0.0000**	-214748.3648 ... 214748.3647
0x5030:005	Internal velocity override	**100.00 %**	0.00 ... 100.00 %
0x5030:010	Control signals	**0x00000000**	0x00000000 ... 0xFFFFFFFF
0x5030:011	External velocity override	**0.00 %**	0.00 ... 100.00 %
0x5030:012	External velocity	**0.0000**	-214748.3648 ... 214748.3647
0x5030:013	External velocity offset	**0.0000**	-214748.3648 ... 214748.3647
0x5030:014	External acceleration	**0.00**	0.00 ... 21474836.47
0x5030:015	External deceleration	**0.00**	0.00 ... 21474836.47
0x5030:016	External jerk	**0.00**	0.00 ... 21474836.47

Address	Name	Default setting	Setting range
0x5030:110	Status signals	**0x00000000**	0x00000000 ... 0xFFFFFFFF
0x5032:015	Active profile: Velocity setpoint	- (Read only)	
0x5032:016	External velocity setpoint	- (Read only)	
0x5032:017	Active set velocity	- (Read only)	
0x5032:018	Set velocity with sign	- (Read only)	
0x5032:019	Velocity setpoint with offset	- (Read only)	
0x5032:021	Velocity setpoint	- (Read only)	
0x5032:022	Acceleration setpoint	- (Read only)	
0x5032:023	Deceleration setpoint	- (Read only)	
0x5032:024	Jerk setpoint	- (Read only)	
0x5032:025	Selected profile	- (Read only)	
0x5032:026	Velocity offset setpoint	- (Read only)	
0x5032:027	Velocity override setpoint	- (Read only)	

7.6 Functions

The following sections describe in detail the configuration of the single subfunctions of the technology application.

- Starting and stopping speed operation 120
- Speed operation with preset setpoints 124
- Inverting the setpoint 125
- Connecting the velocity offset 127
- Connecting the speed override 129

7.6.1 Selecting the setpoint source

- The setpoint source is selected via the following parameter. 0x5020:002
- The external setpoint configuration is only used when bit 29 has not been set in the control signals. ▸ 0x5030:010, Bit 29
- The selected setpoint value is displayed in the **External setpoint speed** parameter. ▸ 0x5032:016

Optional slot B (application feedback)

Fig. 42: Optional slot (B)

If the **Actual speed** parameter is selected as the source, the speed setpoint is output from the optional slot (B) of the device (see Fig. "Optional slot (B)"). ▸ 0x500B:011

Feedback for slot B can for instance be provided by an encoder.

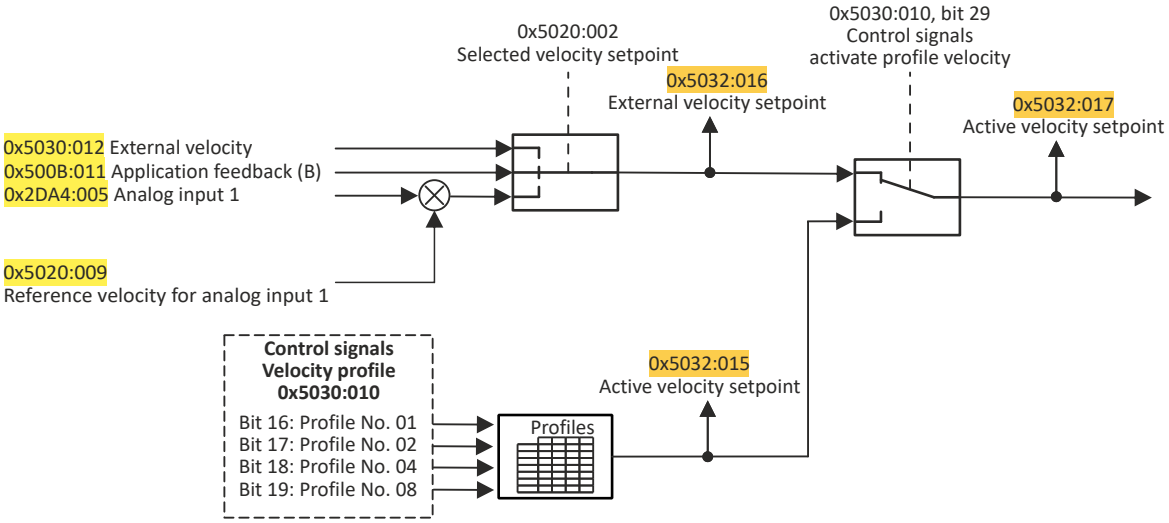

Fig. 43: Selection of the speed source

Analog input 1

The Analog input 1 (see plug connector X3) of the inverter can also serve as a speed source. The analog input supplies via the parameter **Diagnostics of analog input 1: Value in percent scaled**, the analog input supplies a percentage value which refers to a reference speed.
▸ 0x2DA4:005.

The reference speed is set via the parameter **Reference speed for analog input 1**.
▸ 0x5020:009

The parameterisation and scaling of the analog input takes place in the basic settings of the inverter.

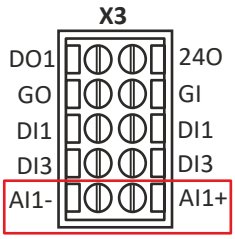

Fig. 44: Front view of the plug connector X3 with analog input 1

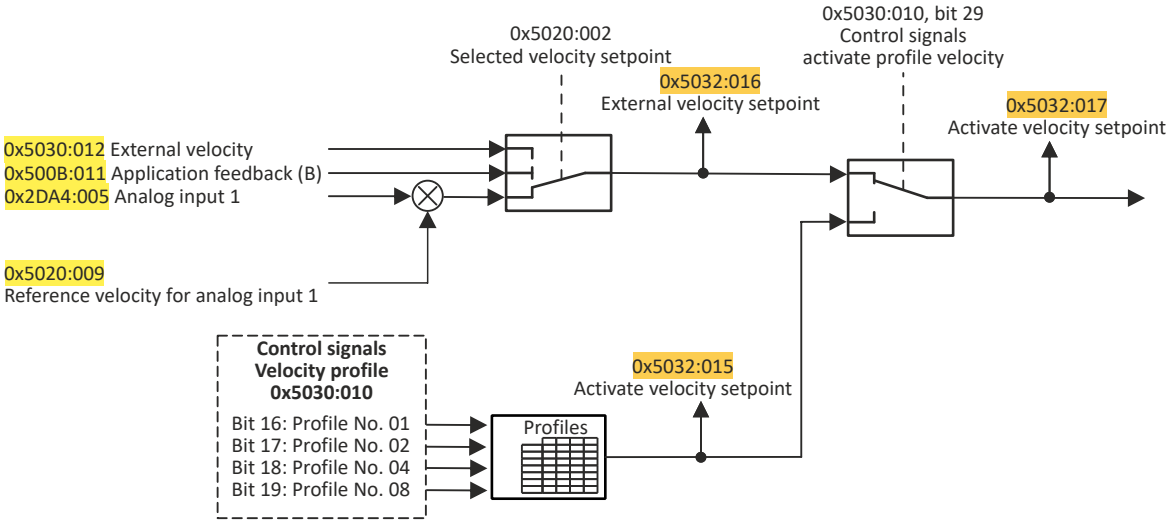

Fig. 45: Analog input 1 as speed source

Example

The analog input supplies a percentage value of 50% via the parameter. ▸ 0x2DA4:005

The reference speed is 500 units/s. The resulting setpoint speed is therefore 250 units/s.
▸ 0x5020:009

Parameter

Address	Name / setting range / [default setting]	Information
0x2DA4:005	Diagnostics of analog input 1: Scaled percent value • Read only: x.xx %	Display of the actual value at the analog input, scaled with the following parameters: • **Minimum value for scaling**. ▸ 0x2636:013 • **Maximum value for scaling**. ▸ 0x2636:014
0x4001	Interface selection	Selecting the interface determines the interface that receives the signals.
	0 Fieldbus network	Control of the application via the fieldbus.
	1 Onboard EtherCAT	Activation of the application via the system bus.
0x500B:011	Actual velocity • Read only	The current speed value is resolved with 4 decimal positions.
0x5020:009	Reference velocity for analog input 1 0.0000 ... [**500.0000**] ... 214748.3647	The reference speed for the percentage value of the analog input.

Address	Name / setting range / [default setting]	Information
0x5030:012	External velocity -214748.3648 ... [**0.0000**] ... 214748.3647	Value for the external setpoint velocity.
0x5032:015	Active profile: Velocity setpoint • Read only	The profile setpoint speed is given in the unit [unit/s]. The value of the profile setpoint speed is displayed with 4 decimal positions.
0x5032:016	External velocity setpoint • Read only	
0x5032:017	Active set velocity • Read only	The speed is resolved with 4 decimal positions. The speed is referred to in the unit [unit/s].

7.6.2 Starting and stopping speed operation

Condition

- The technology application is in perfect condition.
- The drive is enabled.

Execution

order to start a movement with a preselected speed, bit 20 in the **control word** must be set to TRUE. ▸ 0x5030:010, bit 20.

The speed setpoint source corresponds to the source that has been selected via the **Set speed setpoint source** parameter. 0x5020:002

When control bit 20 has been set, the technology application reports via status bit 20 that speed operation is active. ▸ 0x5030:010, Bit 20

The axis now accelerates at the preselected acceleration rate with jerk limitation active (**Jerk profile**) until the specified setpoint speed is reached. When the setpoint speed has been reached, 10 is set in the status bit. ▸ 0x5030:110 Bit 10.

When control bit 20 is set to FALSE, the axis moves to a standstill with the deceleration. This is reported by status bit 12. ▸ 0x5030:110 Bit 12.

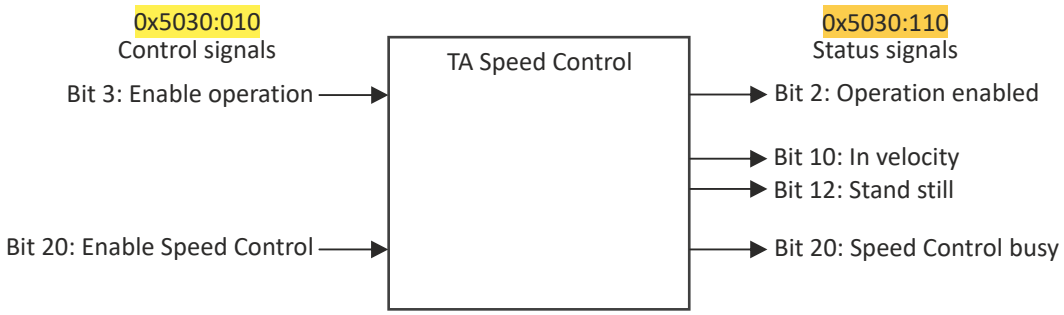

Fig. 46: Control and status bits used

Parameters to be set: ▸ Travel profiles 📖 107

Parameter

Address	Name / setting range / [default setting]	Information
0x5031:003	Velocity profile 0 -214748.3648 ... [**0.0000**] ... 214748.3647	The speed for profile 0 is resolved with 4 decimal positions.
0x5031:004	Acceleration profile 0 0.00 ... [**100.00**] ... 21474836.47	The acceleration for profile 0 is resolved with 2 decimal positions.
0x5031:005	Deceleration profile 0 0.00 ... [**100.00**] ... 21474836.47	The deceleration for profile 0 is resolved with 2 decimal positions.
0x5031:006	Jerk profile 0 0.00 ... [**100000.00**] ... 21474836.47	The jerk for profile 0 is displayed with 2 decimal positions.

Address	Name / setting range / [default setting]	Information
0x5031:023, 034, 045, 056, 067, 078, 089, 100, 111, 122, 133, 144, 155, 166, 177	Profile velocity -214748.3648 ... [**0.0000**] ... 214748.3647	Maximum speed at which the target position is approached. The maximum speed depends on the target position, the acceleration and the deceleration. If the graph is a triangle, the drive has not reach the maximum speed. 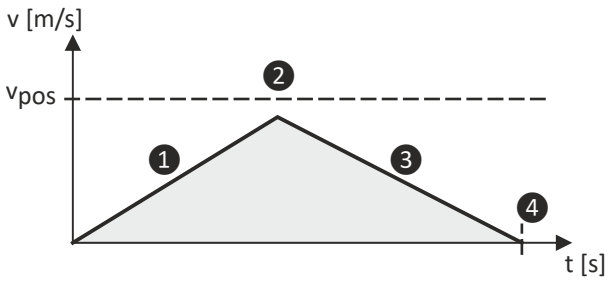 1 Acceleration 2 Maximum speed 3 Deceleration 4 Target position
0x5031:024, 035, 046, 057, 068, 079, 090, 101, 112, 123, 134, 145, 156, 167, 178	Profile acceleration 0.00 ... [**100.00**] ... 21474836.47	Acceleration to reach the maximum speed. The following acceleration types are distinguished: • Linearly increasing acceleration 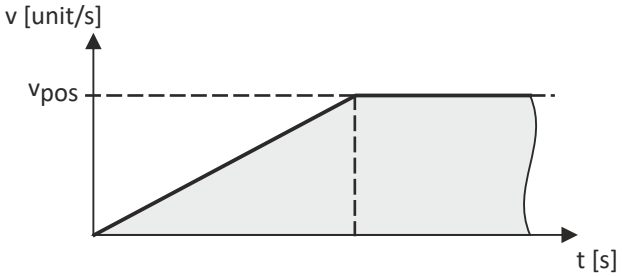 • Acceleration increasing in S-shape 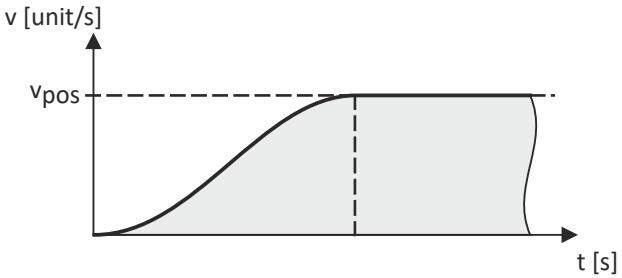
0x5031:025, 036, 047, 058, 069, 080, 091, 102, 113, 124, 135, 146, 157, 168, 179	Profile deceleration 0.00 ... [**100.00**] ... 21474836.47	Deceleration to brake from the maximum speed to standstill.

Address	Name / setting range / [default setting]	Information
0x5031:026, 037, 048, 059, 070, 081, 092, 103, 114, 125, 136, 147, 158, 169, 180	Profile jerk 0.00 ... [**100000.00**] ... 21474836.47	Jerk limitation for the acceleration and deceleration. If a jerk limitation is given for a travel profile, the acceleration and deceleration are executed via S-shaped ramps. • S-shaped ramps protect machine parts from damages. • The S-shaped acceleration and deceleration extend the duration of positioning compared to linear acceleration and deceleration. 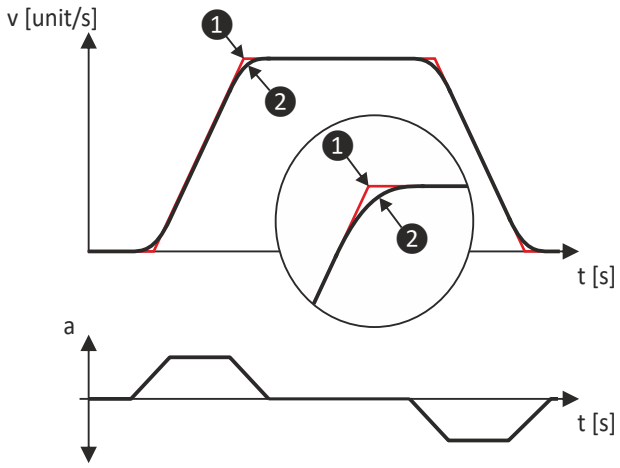 Profile without jerk limitation Profile with jerk limitation
0x5032:012	Active profile: acceleration setpoint • Read only	The acceleration setpoint is specified in the unit [unit/s^2]. The acceleration setpoint is terminated with 2 decimal positions.
0x5032:013	Active profile: deceleration setpoint • Read only	The deceleration setpoint is specified in the unit [unit/s^2]. The deceleration setpoint is terminated with 2 decimal positions.
0x5032:014	Active profile: jerk setpoint • Read only	The jerk setpoint is specified in the unit [unit/s^2]. The jerk setpoint is terminated with 2 decimal positions.
0x5032:015	Active profile: Velocity setpoint • Read only	The profile setpoint speed is given in the unit [unit/s]. The value of the profile setpoint speed is displayed with 4 decimal positions.
0x5032:025	Selected profile • Read only	

Example

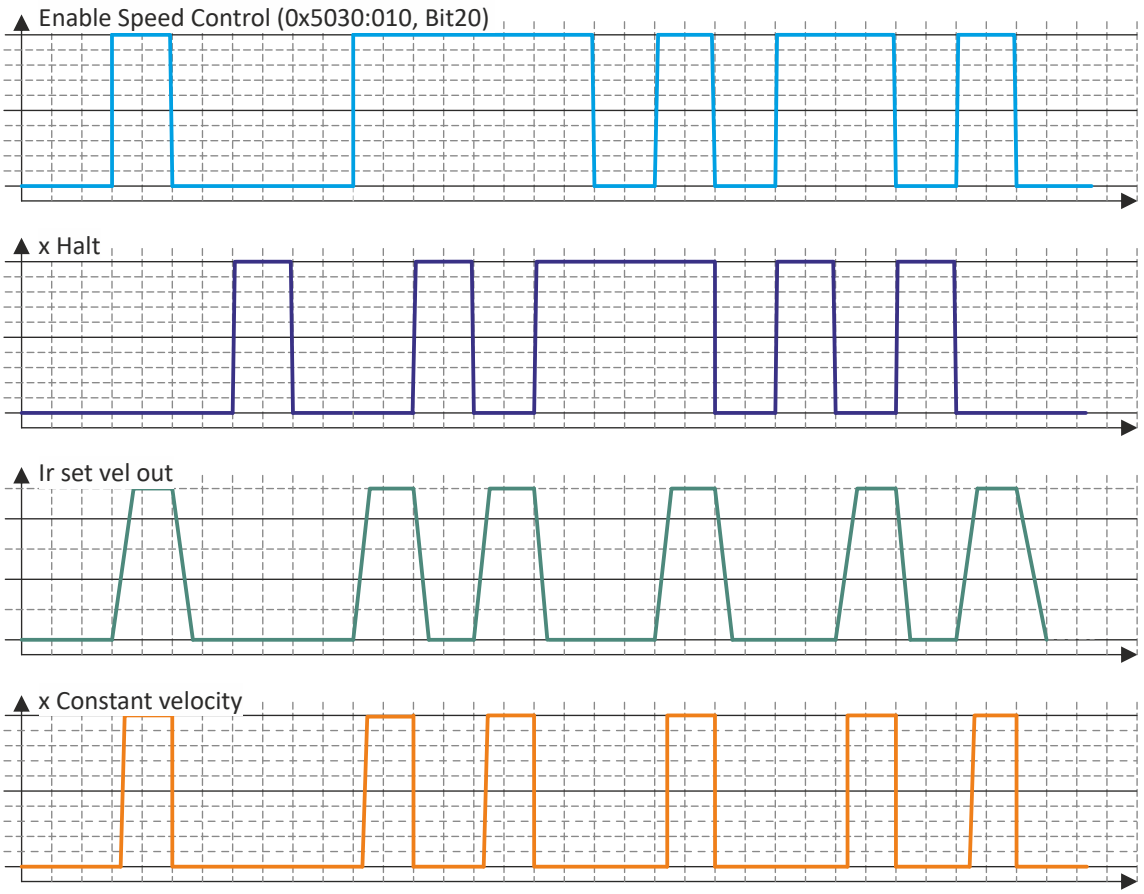

Fig. 47: Speed control mode timing diagram

7.6.3 Speed operation with preset setpoints

During operation, a changeover to individual parameters or to whole profile data sets can be carried out. The changes become effective immediately. In the following example, several profile data sets are provided between which a changeover can be carried out.

Example

The following three profile data sets are parameterised for the example:

Profile number	Speed	Acceleration	Deceleration	Jerk
1	100	1000	1000	10000
2	200	1000	1000	10000
3	50	1000	1000	10000

Speed operation is enabled and profiles 1, 2 and 3 are selected successively to carry out the changeover.

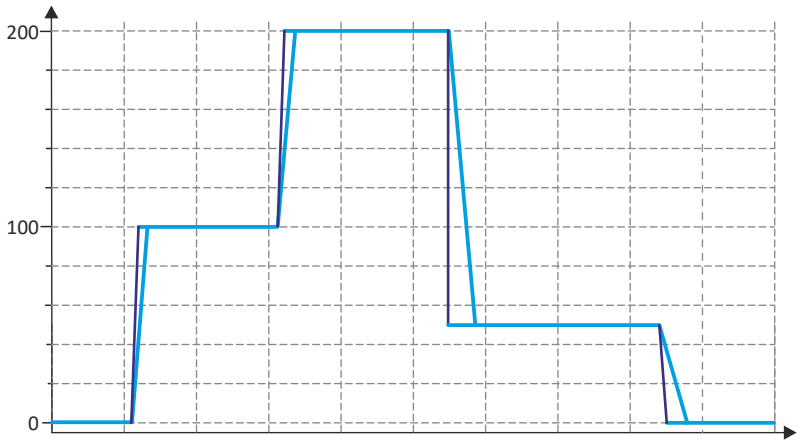

Fig. 48: Changeover between profile data set 1, 2 and 3

7.6.4 Inverting the setpoint

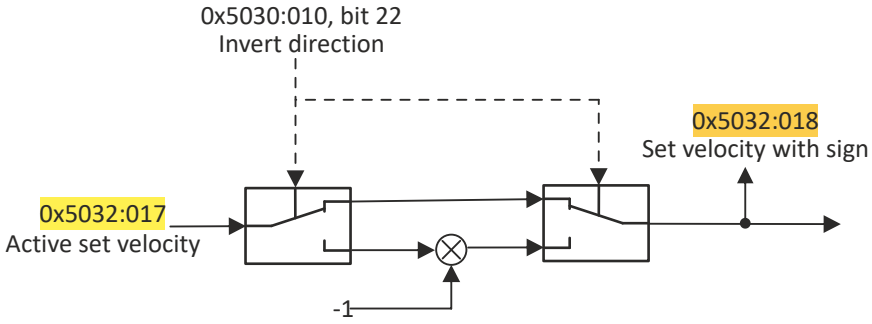

Fig. 49: Inversion of the direction of rotation

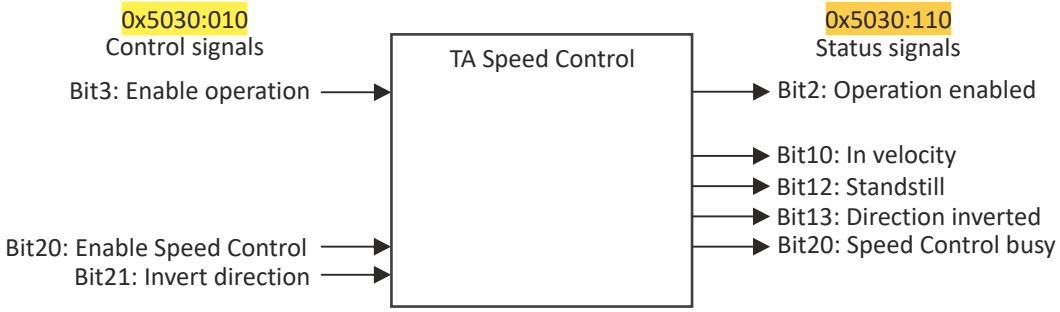

Fig. 50: Control and status bits used

Execution

The selected setpoint speed is inverted via **Active setpoint speed**. ▸ 0x5032:017

For this purpose, control bit 21 of the control word is provided. ▸ 0x5030:010, Bit 22.

If control bit 21 is set to TRUE, the speed setpoint is multiplied by -1. The speed value following the negation position is shown via the **Setpoint speed with sign** parameter.
▸ 0x5032:018

If the axis rotates in the negative direction of rotation, this is indicated via status bit 13.
▸ 0x5030:110, bit 13

Parameter

Address	Name / setting range / [default setting]	Information
0x5032:017	Active set velocity • Read only	The speed is resolved with 4 decimal positions. The speed is referred to in the unit [unit/s].
0x5032:018	Set velocity with sign • Read only	Speed setpoint following the negation position is resolved with 4 decimal positions. The speed setpoint is referred to in the unit [unit/s].
0x5032:028	Set velocity • Read only	
0x5032:029	Direction of rotation inverted • Read only	

Example

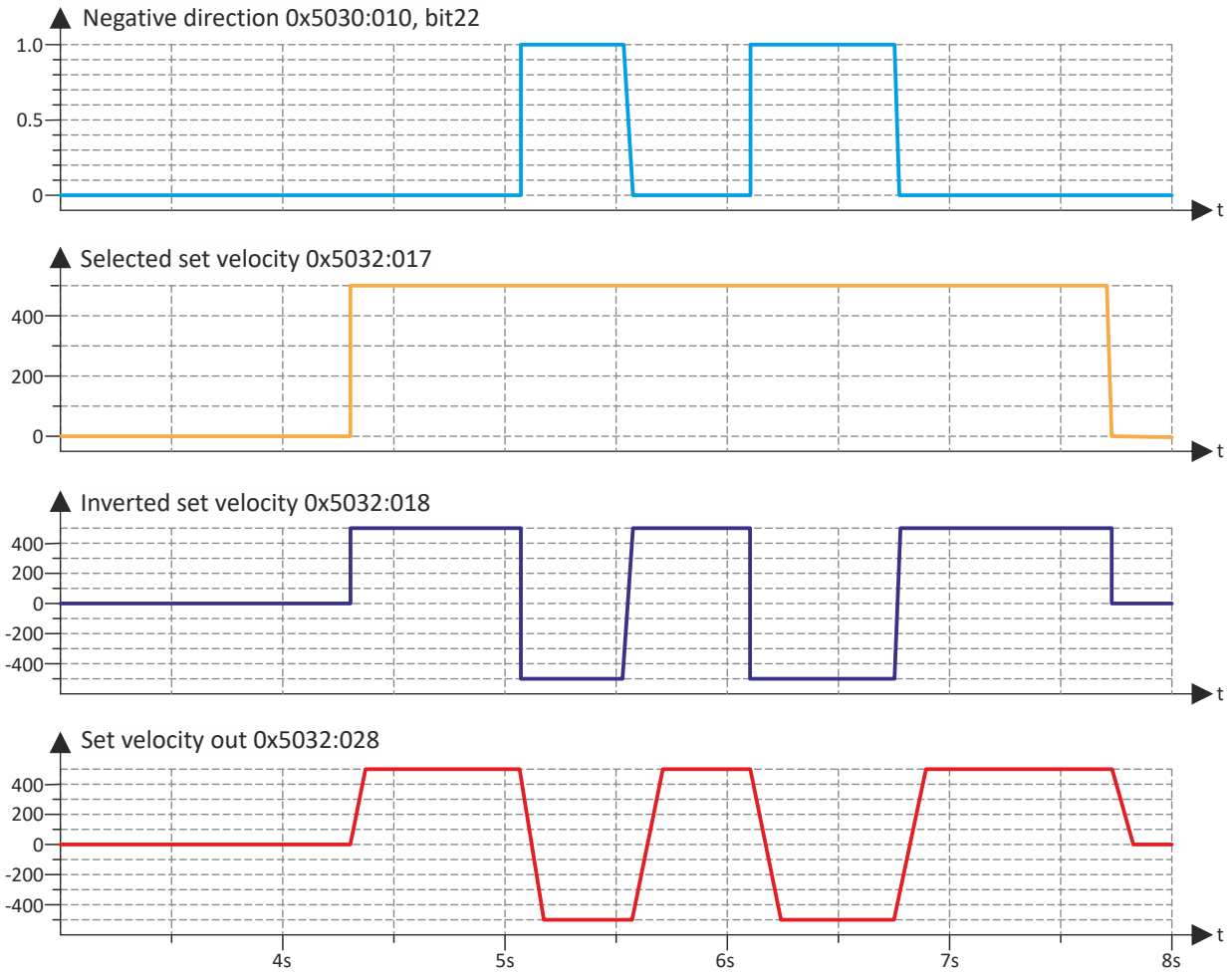

Fig. 51: Speed setpoint time flow diagram

7.6.5 Connecting the velocity offset

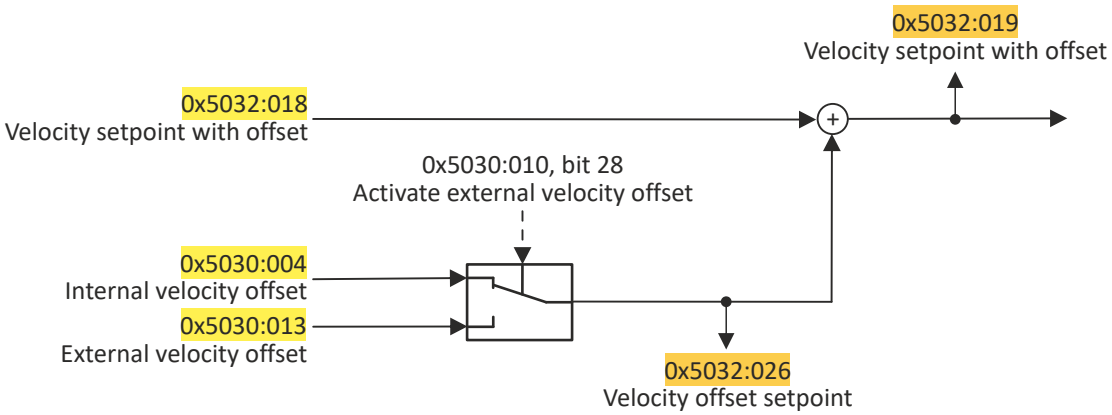

Fig. 52: Use of an external speed offset

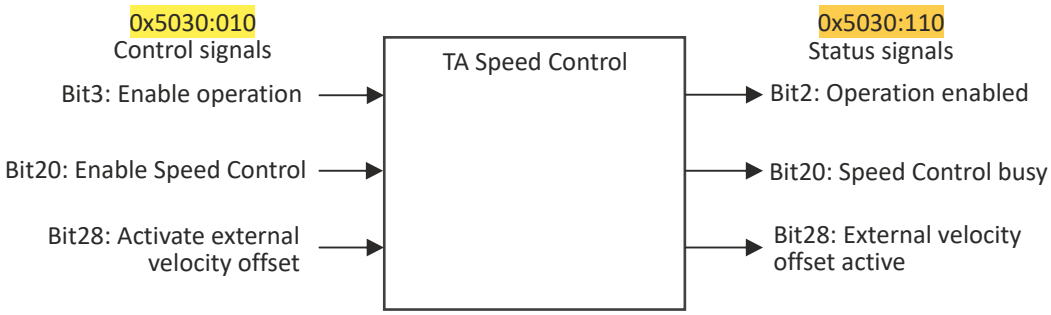

Fig. 53: Control and status bits used

Execution

There are two ways of applying a speed offset:

1. You can use the **Setpoint speed offset** parameter to preselect a fixed speed offset.
   ▸ 0x5032:026
2. An external speed offset is sent via the **External speed offset** parameter. ▸ 0x5030:013

   The external speed offset is activated with control bit 28. ▸ 0x5030:010 Bit 28

The **Setpoint speed offset** parameter indicates which offset value has been selected.
▸ 0x5032:026

In both cases, the value is added to the current **Setpoint speed with sign** speed setpoint.
▸ 0x5032:018

The result of the addition is indicated by the **Setpoint speed with offset** parameter.
▸ 0x5032:019

The offset values are indicated in the unit [units/s] with four decimal positions.

If, for instance, an offset of 75 [unit/s] is to be set via the **External speed offset** control word, the value 750000 must be sent. Status bit 28 indicates whether the speed offset is effective.

Example

Fig. 54: Velocity offset timing diagram

In the diagram, the target velocity is 500 units/s. The axis accelerates to the specified value.

A velocity offset of 250 units/s is applied via the **Setpoint velocity offset** parameter. The axis accelerates to 750 units/s.

Status bit 28 indicates that the velocity offset is effective.

If the setpoint velocity is set to zero, the axis decelerates the velocity to 250 units/s. If the velocity offset is also set to zero, the axis comes to a standstill.

Parameter

Address	Name / setting range / [default setting]	Information
0x5030:004	Internal velocity offset -214748.3648 ... [**0.0000**] ... 214748.3647	Speed offset is resolved with 4 decimal positions. The speed offset has the unit [unit/s].
0x5030:013	External velocity offset -214748.3648 ... [**0.0000**] ... 214748.3647	Value for the external velocity offset.
0x5032:018	Set velocity with sign • Read only	Speed setpoint following the negation position is resolved with 4 decimal positions. The speed setpoint is referred to in the unit [unit/s].
0x5032:019	Velocity setpoint with offset • Read only	Setpoint speed with an offset applied is resolved with 4 decimal positions. The setpoint speed is referred to in the unit [unit/s].
0x5032:026	Velocity offset setpoint • Read only	Speed offset is resolved with 4 decimal positions. The speed offset has the unit [unit/s].

7.6.6 Connecting the speed override

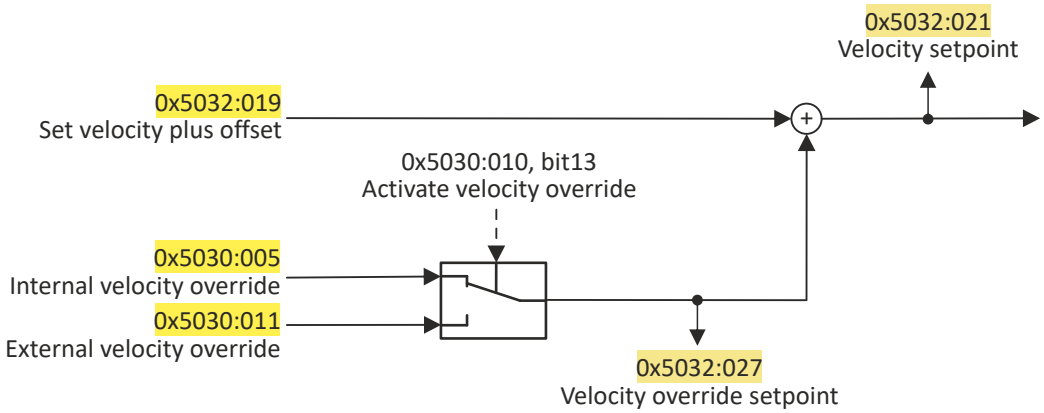

Fig. 55: Use of an external speed override

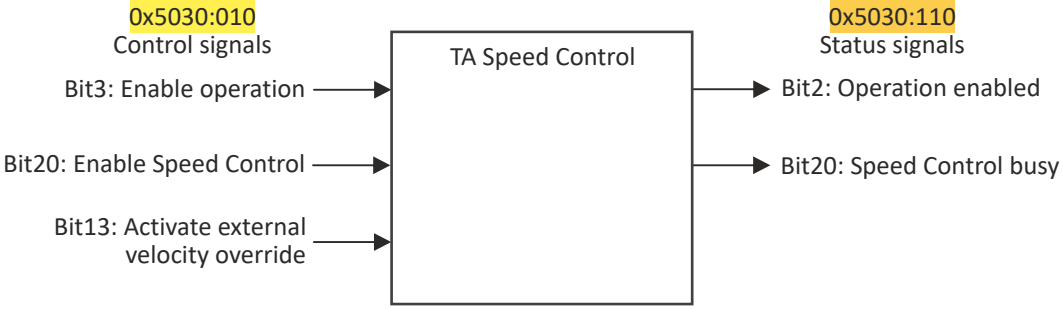

Fig. 56: Control and status bits used

Execution

There are two ways of preselecting a speed override:

1. Specifying the speed override via the **Internal speed override** parameter. ▸ 0x5030:005
2. Setting the speed override via the **External speed override** parameter. ▸ 0x5030:011

The **External speed override** parameter is activated via bit 13. ▸ 0x5030:010 Bit 13

If bit 13 is set, the **External speed override** parameter is used. The **Setpoint speed override** parameter indicates what override value has been selected. ▸ 0x5032:027.

The values are specified in percent with two decimal positions.

Parameter

Address	Name / setting range / [default setting]	Information
0x5030:005	Internal velocity override 0.00 ... [**100.00**] ... 100.00 %	The speed override [%] is set in the range of 0 - 100 %. The speed override has a multiplicative effect on the speed setpoint.
0x5030:011	External velocity override 0.00 ... [**0.00**] ... 100.00 %	Change of the profile speed during a positioning process.
0x5032:019	Velocity setpoint with offset • Read only	Setpoint speed with an offset applied is resolved with 4 decimal positions. The setpoint speed is referred to in the unit [unit/s].
0x5032:021	Velocity setpoint • Read only	
0x5032:027	Velocity override setpoint • Read only	

7.7 Diagnostics

The diagnostic dialog of the »EASY Starter«enables you to view the status of the device and the technology application. Errors and warnings and related error numbers can be read out via the dialog.

A more detailed diagnostics of the technology application and its individual functions can be executed in the **Signal flow** parameter dialog. ▸ Signal flow 🕮 115

8 Configure position control

This operating mode provides a fast position follower with speed, torque and feed force feedforward control.

Typical applications for positioning are, for instance, transport facilities, feed drives and dosing systems.

Preconditions

A positioning control is parameterised in the servo control types to be set. ▸ 0x2C00

Configure one of these motor control types:

- 0x2C00 = 1: Servo control for synchronous motor (SC-PSM) 🕮 224
- 0x2C00 = 2: Servo control for asynchronous motor (SC-ASM) 🕮 225

Further conditions are:

- The correct entry of the ▸ Motor data 🕮 43
- The parameter setting of the motor control in chapter Configuring the motor control 🕮 223

8.1 Basic setting

In the following, the steps required for configuring the position control are described.

1. Set the manufacturer spanning operating mode according to CiA 402.
   - 0x6060: "CiA: Cyclic sync position (csp) [8]"
   - Detailed description in ▸ Operating mode "CiA 402 cyclic sync position mode (csp)" 📖 134
2. Set the maximum motor speed: 0x6080
3. Set the rated motor torque: 0x6076
4. Set the positive torque limit: 0x60E0
5. Set the negative torque limit: 0x60E1

The position control is now active and the inverter responds to the defined position setpoint.

8.1.1 Following error detection and in-position detection

The "following error detection" and "in-position detection" are functions of the position control. All parameters correspond to the CiA 402 specification.

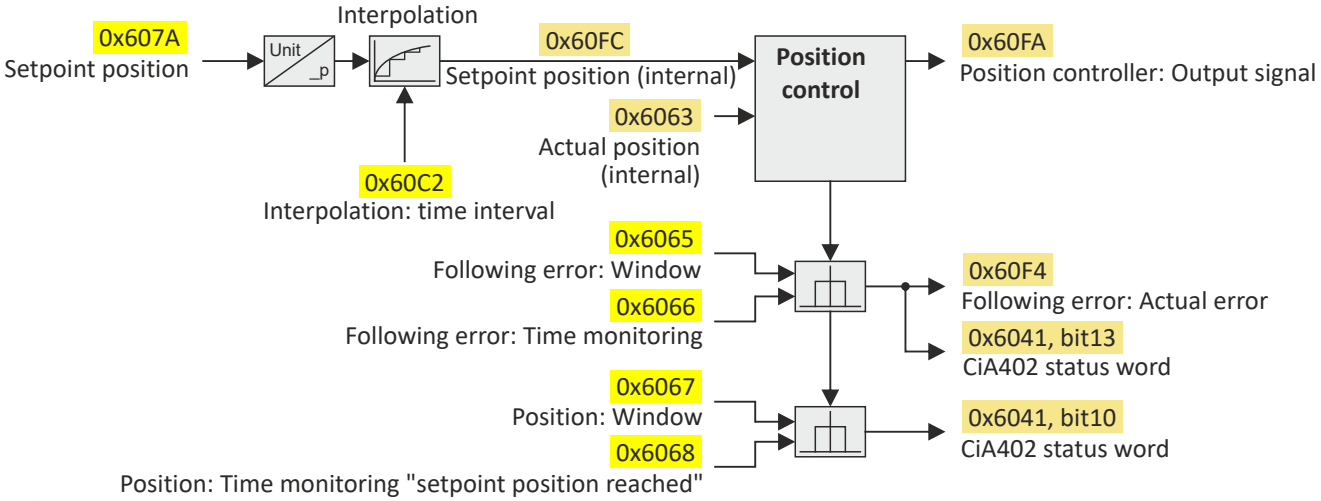

Input data

Parameter	Name	Data type
0x607A	Set position	INTEGER_32
0x60FC	Position demand internal value	INTEGER_32
0x6062	Internal set position	INTEGER_32
0x6065	Following error window	UNSDIGNED_32
0x6066	Following error delay	UNSIGNED_16
0x6067	Position reached window	UNSIGNED_32
0x6068	Position reached delay	UNSIGNED_16

Output data

Parameter	Name	Data type
0x6063	Internal actual position	INTEGER_32
0x6064	Actual position	INTEGER_32
0x60F4	Following error actual value	INTEGER_32
0x60FA	Control effort	INTEGER_32
0x6041	CiA status word	UNSIGNED_16

Parameter

Address	Name / setting range / [default setting]	Information
0x6065	Following error window 0 ... [**1000**] ... 4294967295 inc	Setting of the symmetrical tolerance window around the setpoint position for following error detection. • 0 = following error detection deactivated. • > 0 = following error detection activated. • A following error is detected if the actual position is outside this tolerance window. • If the following error is detected longer than the time defined in 0x6066 in [ms], bit 13 ("following error") is set in the CiA status word (0x6041). • 0x60F4 displays the current deviation of the actual position from the setpoint position.
0x6066	Following error delay 0 ... [**0**] ... 0 ms	Setting of time delay for the following error detection. 0 = the following error is evaluated without a time delay.
0x6067	Position reached window 0 ... [**1000**] ... 4294967295 inc	Setting of the symmetrical tolerance window around the target position (0x607A) for the target position detection. If the actual position is within this tolerance window longer than the time defined in 0x6068 in [ms], the target position is deemed to be reached and bit 10 ("target position reached") is set in the CiA status word (0x6041).

Address	Name / setting range / [default setting]	Information
0x6068	Position reached delay 0 ... [**0**] ... 0 ms	Setting of time monitoring for the target position detection. 0 = the position in the target window is evaluated without a time delay.

8.1.2 Interpolation

When you select an operating mode with cyclic setpoint selection, all setpoints are first led via interpolators which divides down setpoint step-changes of the bus cycle to the cycle time of the control loops.All interpolators together are parameterised via 0x60C2:001 (Interpolation time mantissa).

Parameter

Address	Name / setting range / [default setting]	Information
0x60C0	Interpolation mode	Setting of the interpolation mode.
	-1 **Quadratic**	
	0 Linear	
0x60C2:001	Interpolation time: Interpolation time mantissa 0 ... [**1**] ... 255	Basic multiplier for the interpolation time mantissa.
0x60C2:002	Interpolation time: Interpolation time exponent -6 ... [**-3**] ... 0	Interpolation time exponent

$$t = 0x60C2:001 \times 10^{(0x60C2:002)}$$

$$t = 1 \times 10^{(-3)}\ s = 0.001\ s = 1\ ms$$

8.2 Operating mode "CiA 402 cyclic sync position mode (csp)"

Subfunctions of the operating mode

- Interpolation between communication cycle and control cycle
- Position control
- Speed control
- Torque control
- Update of the actual values for position, speed and torque

8.2.1 Default mapping

The default mapping for the "cyclic sync position mode" is defined in the following parameters:

Parameter	Designation	Data type
0x1600	RPDO-->axis: cyclic sync position mode (csp)	RECORD
0x1606	RPDO-->axis: torque limit	RECORD
0x1A00	Axis-->TPDO: cyclic sync position mode (csp)	RECORD

Data received from the Controller (RPDO)

Parameter	Designation	Data type
0x6040	CiA402 control word	UNSIGNED_16
0x2830	Lenze control word	UNSIGNED_16
0x6060	Operating mode: selection	INTEGER_8
0x60B2	Torque: offset	INTEGER_16
0x607A	Position: setpoint position	INTEGER_32
0x60B1	Velocity: offset	INTEGER_32
0x2902	Speed controller: load I component	INTEGER_16
0x60E0	Torque: positive limit value	UNSIGNED_16
0x60E1	Torque: negative limit value	UNSIGNED_16

Data sent to the Controller (TPDO)

Parameter	Designation	Data type
0x6041	CiA402 status word	UNSIGNED_16
0x2831	Lenze status word	UNSIGNED_16
0x6061	Operating mode: display	INTEGER_8
0x603F	Error code	UNSIGNED_16
0x606C	Velocity: actual velocity	UNSIGNED_16
0x6077	Torque: actual torque	INTEGER_16
0x6064	Position: actual position	INTEGER_32
0x60F4	Following error: actual error	INTEGER_32

8.2.2 Signal flow

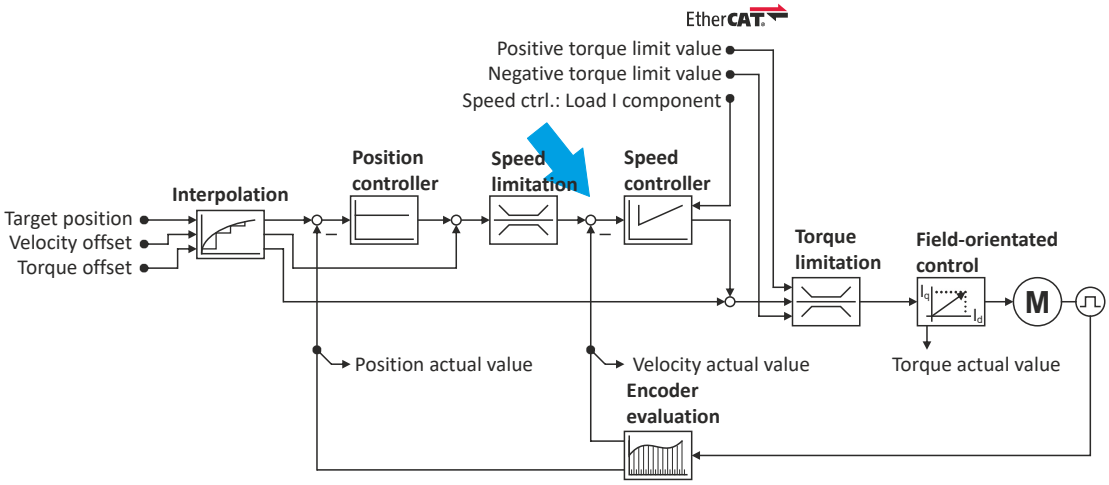

Overview of the most important parameters

Function	Icon	Parameter	Name
Input data		0x6040	CiA control word
		0x2830	Inverter control word
		0x6060	CiA: Operation mode
		0x607A	Set position
		0x60B1	Offset speed
		0x60B2	Offset torque
		0x60E0	Positive torque limit
		0x60E1	Negative torque limit
		0x2902	I component load value
Output data		0x6041	CiA status word
		0x2831	Inverter status word
		0x6061	CiA: Active operation mode
		0x6064	Actual position
		0x606C	Actual speed
		0x6077	Actual torque
Interpolation		0x60C0	Interpolation mode
		0x60C2:001	Interpolation time
		0x60C2:002	Interpolation time
Position controller		0x2980	Position controller gain
		0x2981	Position controller gain adaption
		0x2982	Position controller output signal limitation
		0x2983	Actual position start value
		0x2984	Mode for setting the actual position
		0x2986	Resulting gain adaption
Speed limitation		0x6080	Max. motor speed
Speed controller		0x2900:001	Gain
		0x2900:002	Reset time
		0x2900:003	Rate time
		0x2901	Speed controller gain adaption
		0x2902	I component load value
Torque limitation		0x60E0	Positive torque limit
		0x60E1	Negative torque limit
		0x6076	Rated motor torque
		0x6072	Max. torque
Field-oriented control		0x6073	Max. current
		0x6075	Rated motor current
		0x2941	Current controller feedforward control
		0x2942:001	Current controller parameters Gain
		0x2942:002	Current controller parameters Reset time
		0x29E2	DC-bus filter time
		0x29E3	Motor voltage filter time
		0x29E0:001	Field weakening controller settings Gain (ASM)
		0x29E0:002	Field weakening controller settings Reset time (ASM)
		0x29E1	Field weakening controller Field limitation
		0x29C0:001	Field controller settings Gain
		0x29C0:002	Field controller settings Reset time
		0x2939	Switching frequency

8.2.3 Control commands and status information

The following control commands can be executed via the CiA 402 control word 0x6040:

Control word	State	Function
Bit 4	0	*reserved* (bit must be set to "0".)
Bit 5	0	*reserved* (bit must be set to "0".)
Bit 6	0	*reserved* (bit must be set to "0".)
Bit 8	0↗1	Stop

The following status information is output via the CiA402 status word 0x6041:

Status word	State	Meaning
Bit 12	0	Operating mode is inactive.
	1	The drive follows the setpoint selection.

8.3 Process input data (CiA 402 objects)

Parameter

Address	Name / setting range / [default setting]		Information
0x6060	CiA: Operation mode		CiA: Operation mode
	-13	MS: Manual jog open loop (MOL)	Manufacturer-specific manual control ▸ Operation mode "Manual Jog" 🕮 330
	-12	MS: Pole position identification (PPI)	Manufacturer-specific pole position identification (PLI) ▸ Synchronous motor: Pole position identification (PPI) 🕮 207 ▸ Selection of the PPI method for CiA mode 🕮 208
	0	**No selection**	No selection
	2	CiA: Velocity mode (vl)	▸ Operating mode "CiA 402 velocity mode (vl)" 🕮 147
	8	CiA: Cyclic sync position (csp)	▸ Operating mode "CiA 402 cyclic sync position mode (csp)" 🕮 134
	9	CiA: Cyclic sync velocity mode (csv)	▸ Operating mode "CiA 402 cyclic sync velocity mode (csv)" 🕮 154
	10	CiA: Cyclic sync torque mode (cst)	▸ Operating mode "CiA 402 cyclic sync torque mode (cst)" 🕮 165
0x607A	Set position -2147483648 ... [**0**] ... 2147483647 inc		Setting of the set position.
0x60B1	Offset speed -2147483648.00 ... [**0.00**] ... 2147483647.00 rpm		Additive value for setpoint velocity or velocity feedforward control - offset speed.
0x60B2	Offset torque -3276.8 ... [**0.0**] ... 3276.7 %		Offset torque • 100 % = rated motor power (0x6076)
0x60E0	Positive torque limit 0.0 ... [**100.0**] ... 3276.7 %		Positive torque limit source for speed control with torque limitation. • 100 % = Rated motor torque 0x6076 • The value is taken from the application: 0x500A:128.
0x60E1	Negative torque limit 0.0 ... [**100.0**] ... 3276.7 %		Negative torque limit source for speed control with torque limitation. • 100 % = Rated motor torque 0x6076 • The value is taken from the application: 0x500A:129.

8.4 Process output data (CiA 402 objects)

Parameter

Address	Name / setting range / [default setting]	Information
0x6064	Actual position • Read only: x inc	Display of the actual position.
0x6077	Actual torque • Read only: x.x %	Display of the actual torque. • 100 % = Rated motor torque 0x6076
0x60F4	Following error actual value • Read only: x inc	Display of the current following error.

8.5 Monitoring the position error

Position error monitoring can be used for the following control modes:

- Servo control for synchronous motor (SM), 0x2C00 = [1]
- Servo control for asynchronous motor (ASM), 0x2C00 = [2]

Following error monitoring is effective in an operating mode with position controller. The system deviation (i. e. the following error) is compared to the following error tolerance set at the input of the position controller (see red arrow in the figure below).

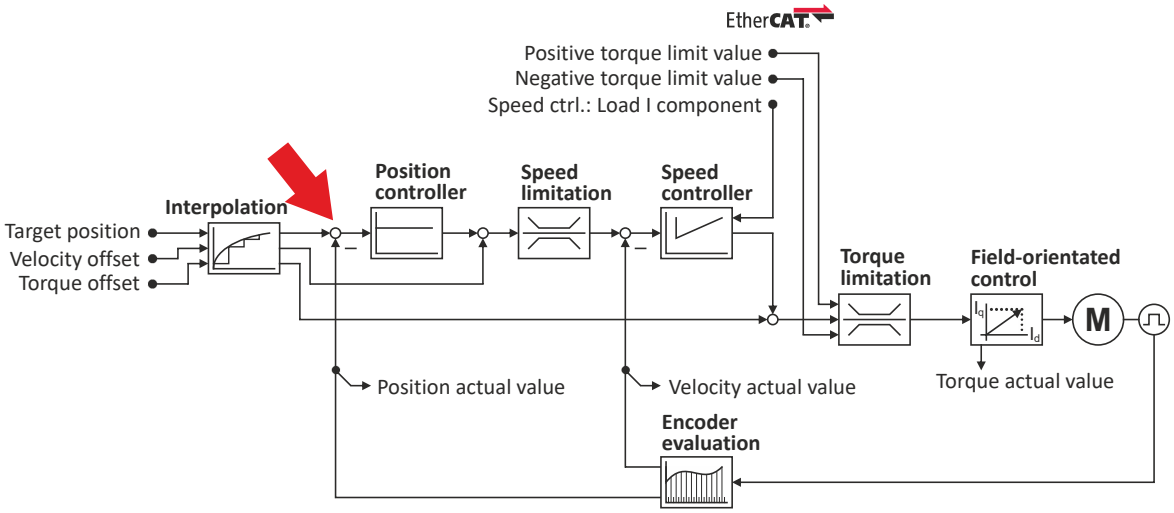

The error response set in 0x2D51:006 is executed if ...

1. the following error tolerance set in 0x2D51:004 is exceeded and ...
2. the exceedance lasts at least as long as set in 0x2D51:005.

Parameter

Address	Name / setting range / [default setting]	Information
0x2D51:004	Position error/speed error - monitoring: Position error - error threshold 1 ... [**360**] ... 2147483647 °	Setting of the error threshold for position error monitoring.
0x2D51:005	Position error/speed error - monitoring: Position error - min. time for error 0 ... [**0**] ... 50 ms	Setting of the minimum time a position error must be pending until an error/warning message is triggered.
0x2D51:006	Position error/speed error - monitoring: Position error - error response	Setting of the error response of position error monitoring.
	0 **No response**	▸ Severity 574
	1 Fault > CiA402	
	2 Warning	
0x2922:001	Following error diagnostics: Following error (interval) - Time 10 ... [**1000**] ... 65535 ms	Time interval for determining the following error.
0x2922:002	Following error diagnostics: Following error (interval) - Mean value • Read only: x.xx °	Mean value in the time interval
0x2922:003	Following error diagnostics: Following error (interval) - Maximum value • Read only: x.xx °	Maximum value in the time interval
0x2922:004	Following error diagnostics: Following error (manual) - Start/Stop	Determination of the following error between manually specified start/ stop command.
	0 **Stop**	
	1 Start	
0x2922:005	Following error diagnostics: Following error (manual) - Mean value • Read only: x.xx °	Mean value between "start" and "stop"

Address	Name / setting range / [default setting]	Information
0x2922:006	Following error diagnostics: Following error (manual) - Maximum value • Read only: x.xx °	Maximum value between "start" and "stop"
0x2922:007	Following error diagnostics: Following error (standstill-standstill) - Mean value • Read only: x.xx °	Mean value between "standstill" and "standstill" of the drive (< 5 rpm) The value is automatically updated when the speed drops below 5 rpm again.
0x2922:008	Following error diagnostics: Following error (standstill-standstill) - Maximum value • Read only: x.xx °	Maximum value between "standstill" and "standstill" of the drive (< 5 rev./min) The value is automatically updated when the speed drops below 5 rpm again.

8.6 Position detection with touch probe (TP)

A "touch probe" (short: "TP") is an event that can be triggered, for instance via a digital input in an edge-controlled manner to detect and further process an actual value (which is changing fast) at the triggering time.

- Typical applications for touch probes:
  - Homing
  - Mark synchronisation
  - Length measurements
- Up to 2 touch probe channels can be used in parallel.
- Possible touch probe sources:
  - TP1 : Zero pulse position encoder or digital input DI1
  - TP2 : Zero pulse position encoder or digital input DI2

The digital inputs DI1 and DI2 can be additionally evaluated any time as "normal" digital inputs via 0x60FD.

8.6.1 Default mapping

The default mapping for a touch probe detection is defined in the following parameters:

Parameter	Designation	Data type
0x1604	RPDO-->axis: touch probe (TP)	RECORD
0x1A04	Axis-->TPDO: touch probe (TP)	RECORD

Data received from the Controller (RPDO)

Parameter	Designation	Data type
0x60B8	Touch probe control word	UNSIGNED_16

Data sent to the Controller (TPDO)

Parameter	Designation	Data type
0x60B9	Touch probe status word	UNSIGNED_16
0x60BA	TP1: actual position - rising edge	INTEGER_32
0x60BB	TP1: actual position - falling edge	INTEGER_32
0x60BC	TP2: actual position - rising edge	INTEGER_32
0x60BD	TP2: actual position - falling edge	INTEGER_32

8.6.2 General mode of operation

If an event occurs at the configured touch probe source, a time stamp is detected in the servo inverter.

The detected time stamp is related to the system time and can thus be divided into two parts: One part is the control cycle in which the of the event. The other part is the time difference starting from the detected control cycle to the real detection of the event

Thanks to a history buffer, the servo inverter knows the last n position values. Thus, the actual position is known at the start and at the end of the control cycle in which the event has occurred. A linear interpolation takes place between these two position grid points. The result is the exact position at the motor shaft at the time the event is triggered, see the schematic diagram:

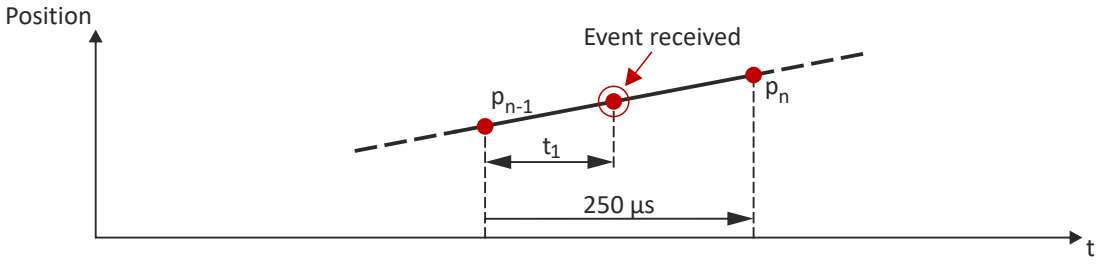

t_1: Time difference starting from the detected control cycle to the real detection of the event

P_{n-1}: Actual position grid point 1

P_n: Actual position grid point 2

The position grid points are detected in the servo inverter in a grid of 250 µs. After a touch probe has been triggered, the input is deactivated for up to 250 µs to avoid bouncing. Thus, the maximum frequency for touch probe triggering is 4 kHz.

If in contrast to the uniform movement given in the figure, an accelerated movement is taken as a basis, the 250 µs grid also allows for a very good linear position reconstruction because the speed change at the motor shaft only has a marginal impact in 250 µs.

8.6.3 Filtering of the touch probe signal

For the touch probe inputs, a common filter time (debounce time) can be parameterised to debounce the TP signals so that there is no response to external interfering signals.

- The signal status of the debouncing filter is detected at the TP input and a new value is added to the filter.
- A separate setting for a touch probe is not possible. Thus, the filter time is set for all touch probe inputs.

Parameter

Address	Name / setting range / [default setting]	Information
0x2500	Touch probe filter time 0 ... [**0**] ... 1984 µs	The set filter time is automatically taken into account in the touch probe calculation. The setting "0" deactivates the filter. Note! Values can be set directly. When entering a filter time between 0 ... 1984 µs, the value is automatically rounded down internally to the next value that can be set and is shown in the case of read requests.

8.6.4 Compensation of runtime delays

In reality, both the input circuit in the servo inverter and the touch probe sensor have runtime delays (latencies) themselves. These can be taken into account in the calculation of the real trigger time and thus the real position at the trigger time.

In the following figure, the event is detected in the servo inverter at the time ②. Due to the input circuit and the sensor used, the signal runtime, however, has been delayed. The real physical event has already occurred at time ①. For compensating this runtime delay, you can set a corresponding delay time for each touch probe channel that is included in the determination of the control cycle and interpolation of the position, see figure in chapter "General mode of operation". 📖 141

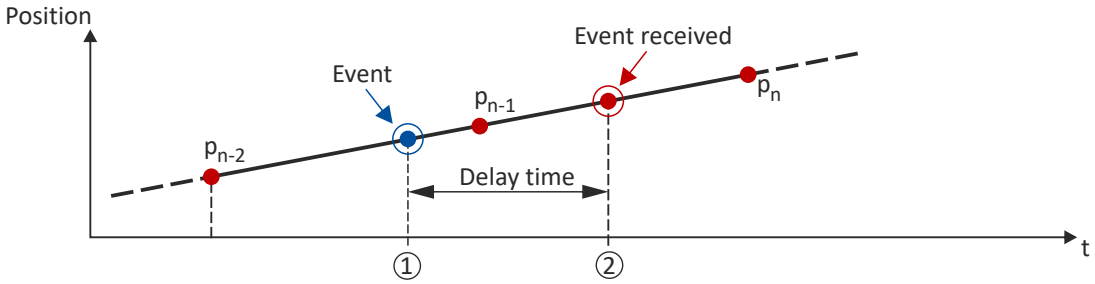

"Delay time": Delay time between the real physical event and the electrical detection.

① Real physical event

② Electrical detection of the event in the servo inverter

Delay times of the digital input and the required minimum signal duration

The following table lists the typical delay times and the required minimum signal durations for the digital inputs of the servo inverter:

Digital signal	Typical delay time	Minimum signal duration
Rising edge (HIGH pulse)	4 µs	4 µs
Falling edge (LOW pulse)	4 µs	4 µs

Parameter

Address	Name / setting range / [default setting]	Information
0x2D00:001	Touch probe (TP) delay time: Touch probe 1 delay time 0.000 ... [**0.000**] ... 7.000 ms	Setting of the delay time for touch probe 1.
0x2D00:002	Touch probe (TP) delay time: Touch probe 2 delay time 0.000 ... [**0.000**] ... 7.000 ms	Setting of the delay time for touch probe 2.
0x2D00:003	Touch probe (TP) delay time: Touch probe 3 delay time 0.000 ... [**0.000**] ... 7.000 ms	Setting of the delay time for touch probe 3.
0x2D00:004	Touch probe (TP) delay time: Touch probe 4 delay time 0.000 ... [**0.000**] ... 7.000 ms	Setting of the delay time for touch probe 4.

8.6.5 Touch probe control word

Control words for configuring the touch probe functionality.

- CiA control word (Touch probe 1/2): ▸ 0x60B8
- Extended control word (Touch probe 3/4, manufacturer-specific): ▸ 0x2D02:001

Parameter

Address	Name / setting range / [default setting]		Information
0x60B8	Touch probe settings 0x0000 ... [**0x0000**] ... 0xFFFF		Control word for configuring the touch probe settings.
	Bit 0	TP1 enable	0: deactivate touch probe channel 1. 1: activate touch probe channel 1.
	Bit 1	TP1 continous trigger	Event for touch probe channel 1 0: only detect the first event. 1: detect all events.
	Bit 2	TP1 trigger with zero pulse	Source for touch probe channel 1 0: digital input 1 1: zero pulse position encoder
	Bit 4	TP1 enable pos. edge	0: deactivate scanning. 1: activate scanning.
	Bit 5	TP1 enable neg. edge	
	Bit 8	TP2 enable	0: deactivate touch probe channel 2. 1: activate touch probe channel 2.
	Bit 9	TP2 continous trigger	Event for touch probe channel 2 0: only detect the first event. 1: detect all events.
	Bit 10	TP2 trigger with zero pulse	Source for touch probe channel 2 0: digital input 2 1: zero pulse position encoder
	Bit 12	TP2 enable pos. edge	0: deactivate scanning. 1: activate scanning.
	Bit 13	TP2 enable neg. edge	

Parameter

Address	Name / setting range / [default setting]		Information
0x2D02:001	Touch probe diagnostics: Touch probe 3/4 function 0x0000 ... [**0x0000**] ... 0xFFFF		
	Bit 0	Activate touch probe 3	
	Bit 1	Touch probe 3 trigger = 1st event/continous	
	Bit 2	Touch probe 3 source = TP input/zero pulse	
	Bit 4	Touch probe 3 sampling = rising edge	
	Bit 5	Touch probe 3 sampling = falling edge	
	Bit 6	Position feedback source	
	Bit 8	Activate touch probe 4	
	Bit 9	Touch probe 4 trigger = 1st event/continous	
	Bit 10	Touch probe 4 source = TP input/zero pulse	
	Bit 12	Erfassung Touch-Probe 4 = steigende Flanke	
	Bit 13	Erfassung Touch-Probe 4 = fallende Flanke	
	Bit 14	Position feedback source	

8.6.6 Touch probe status word

Status words of the touch probe functionality.

- CiA status word(Touch probe 1/2): ▸ 0x60B9
- Extended status word (Touch probe 3/4, manufacturer-specific): ▸ 0x2D02:002

Parameter

Address	Name / setting range / [default setting]		Information
0x60B9	Touch probe status • Read only		Status of the touch probe functionality.
	Bit 0	TP1 active	0: touch probe channel 1 deactivated. 1: touch probe channel 1 activated.
	Bit 1	TP1 pos. edge detected	0: position not detected. 1: position detected.
	Bit 2	TP1 neg. edge detected	
	Bit 6	TP1 level at enable start	Level for detection via touch probe channel 1 0: LOW level 1: HIGH level
	Bit 8	TP2 active	0: touch probe channel 2 deactivated. 1: touch probe channel 2 activated.
	Bit 9	TP2 pos. edge detected	0: position not detected. 1: position detected.
	Bit 10	TP2 neg. edge detected	
	Bit 14	TP2 level at enable start	Level for detection via touch probe channel 2 0: LOW level 1: HIGH level

Parameter

Address	Name / setting range / [default setting]		Information
0x2D02:002	Touch probe diagnostics: Touch-Probe 3/4 status • Read only		
	Bit 0	Touch-Probe 3 ist aktiviert	
	Bit 1	Touch-Probe 3 - Position erfasst fallende Flanke	
	Bit 2	Touch-Probe 3 - Position erfasst steigende Flanke	
	Bit 6	Touch-Probe 3 - Pegel bei Zeitstempel	
	Bit 8	Touch-Probe 4 ist aktiviert	
	Bit 9	Touch-Probe 4 - Position erfasst fallende Flanke	
	Bit 10	Touch-Probe 4 - Position erfasst steigende Flanke	
	Bit 14	Touch-Probe 4 - Pegel bei Zeitstempel	

8.6.7 Detected time stamp and positions

In case of the "continuous touch probe configuration", a newly detected value overwrites the previously detected value.

Parameter

Address	Name / setting range / [default setting]	Information
0x60BA	Touch probe 1: Position at pos. edge • Read only: x inc	Touch probe 1: Position at pos. edge
0x60BB	Touch probe 1: Position at neg. edge • Read only: x inc	Touch probe 1: Position at neg. edge
0x60BC	Touch probe 2: Position at pos. edge • Read only: x inc	Touch Probe 2: Position at pos. edge
0x60BD	Touch probe 2: Position at neg. edge • Read only: x inc	Touch probe 2: Position at neg. edge

Address	Name / setting range / [default setting]	Information
0x2D03:001	Touch probe position: Touch probe 3 position rising edge • Read only: x inc	
0x2D03:002	Touch probe position: Touch probe 3 position falling edge • Read only: x inc	
0x2D03:003	Touch probe position: Touch probe 4 position rising edge • Read only: x inc	
0x2D03:004	Touch probe position: Touch probe 4 position falling edge • Read only: x inc	
0x2D01:001	Touch probe (TP) time stamp: Touch probe 1-rising edge time stamp • Read only: x ns	Display of the time stamp of the rising edge for touch probe 1.
0x2D01:002	Touch probe (TP) time stamp: Touch probe 1-falling edge time stamp • Read only: x ns	Display of the time stamp of the falling edge for touch probe 1.
0x2D01:003	Touch probe (TP) time stamp: Touch probe 2-rising edge time stamp • Read only: x ns	Display of the time stamp of the rising edge for touch probe 2.
0x2D01:004	Touch probe (TP) time stamp: Touch probe 2-falling edge time stamp • Read only: x ns	Display of the time stamp of the falling edge for touch probe 2.
0x2D01:005	Touch probe (TP) time stamp: Touch probe 3-rising edge time stamp • Read only: x ns	Display of the time stamp of the rising edge for touch probe 3.
0x2D01:006	Touch probe (TP) time stamp: Touch probe 3-falling edge time stamp • Read only: x ns	Display of the time stamp of the falling edge for touch probe 3.
0x2D01:007	Touch probe (TP) time stamp: Touch probe 4-rising edge time stamp • Read only: x ns	Display of the time stamp of the rising edge for touch probe 4.
0x2D01:008	Touch probe (TP) time stamp: Touch probe 4-falling edge time stamp • Read only: x ns	Display of the time stamp of the falling edge for touch probe 4.

8.7 Setpoint diagnostics

The following parameters provide information on the setpoints set for position control.

Parameter

Address	Name / setting range / [default setting]	Information
0x6062	Internal set position • Read only: x inc	Display of the interpolated internal set position for the position control.
0x6063	Internal actual position • Read only: x incr.	Display of the actual position in the internal unit.
0x60FC	Position demand internal value • Read only: x incr.	Display of the interpolated setpoint position for the position control in the internal unit.
0x60FA	Control effort • Read only: rpm	Display of the actuating signal (setpoint speed) of the position controller.

9 Configure speed control

Two operating modes are available for configuring the speed control:

- Operating mode "CiA 402 velocity mode (vl)" 📖 147

  Here, a speed-controlled movement of the drive is realised by defining a speed setpoint.
- Operating mode "CiA 402 cyclic sync velocity mode (csv)" 📖 154

  This operating mode provides a fast speed follower with torque/feed force feedforward control.

The conditions are a correct entry of the motor data (Motor data) and the parameter setting of the motor control (Configuring the motor control).

9.1 Basic setting

The following describes the steps required for configuring the speed control.

1. 0x6060Set the manufacturer spanning operating mode "CiA: Velocity mode (vl) [2]" or "CiA: Cyclic sync velocity mode (csv) [9]".
   - A detailed description of the "CiA: Velocity mode (vl)" operating mode can be found in the section Operating mode "CiA 402 velocity mode (vl)" . 📖 147
   - A detailed description of the "CiA: Cyclic sync velocity mode (csv)" operating mode can be found in the section Operating mode "CiA 402 cyclic sync velocity mode (csv)" . 📖 154
2. Set the maximum motor speed in Max. motor speed. ▸ 0x6080
3. Set the rated motor torque in Rated motor torque. ▸ 0x6076
4. Set the positive torque limit. ▸ 0x60E0
5. Set the negative torque limit. ▸ 0x60E1

The speed control is now active and the inverter responds to the speed setpoint.

9.2 Operating mode "CiA 402 velocity mode (vl)"

Selection of the operating mode

The "speed" operating mode is selected with the setting "2" in 0x6060.

9.2.1 Default mapping

The default mapping for the "Speed" operating mode is defined in the following parameters.

Parameter	Designation	Data type
0x1603	RPDO-->axis: Velocity mode (vl)	RECORD
0x1A03	Axis-->TPDO: Velocity mode (vl)	RECORD

Data received from the Controller (RPDO)

Parameter	Designation	Data type
0x6040	CiA402 control word	UNSIGNED_16
0x2830	Lenze control word	UNSIGNED_16
0x6060	Operating mode: selection	INTEGER_8
0x6042	Velocity: setpoint velocity vl	INTEGER_8

Data sent to the Controller (TPDO)

Parameter	Designation	Data type
0x6041	CiA402 control word	UNSIGNED_16
0x2831	Lenze control word	UNSIGNED_16
0x6061	Operating mode: display	INTEGER_8
0x603F	Error code	UNSIGNED_16
0x6044	Velocity: actual velocity vl	INTEGER_8

9.2.2 Signal flow (servo control)

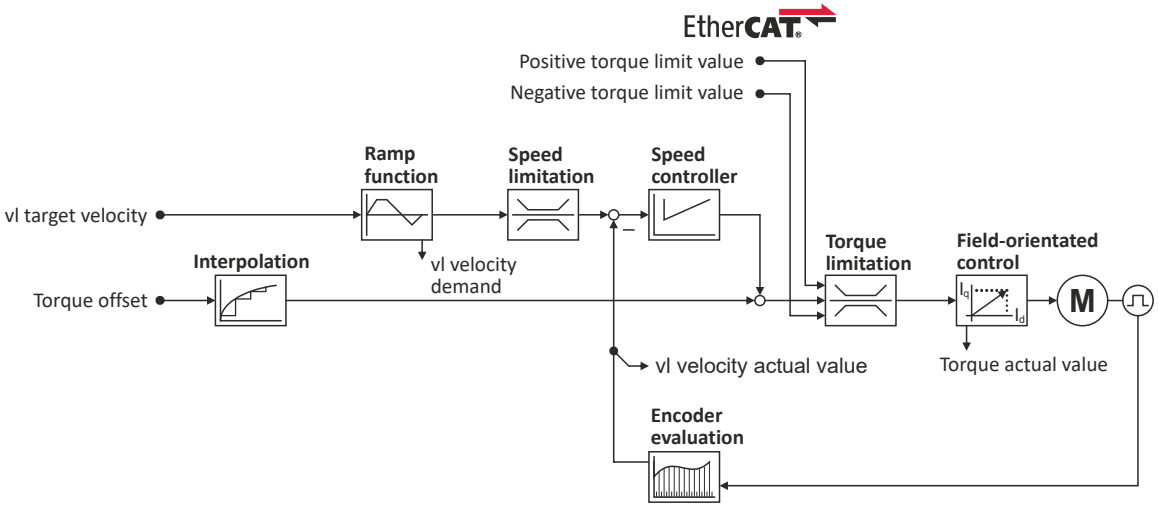

Overview of the most important parameters

Function	Icon	Parameter	Name
Input data		0x6040	CiA control word
		0x2830	Inverter control word
		0x6060	CiA: Operation mode
		0x6042	Set speed
		0x60B2	Offset torque
		0x60E0	Positive torque limit
		0x60E1	Negative torque limit
Output data		0x6041	CiA status word
		0x2831	Inverter status word
		0x6061	CiA: Active operation mode
		0x6043	Internal set speed
		0x606C	Actual speed
		0x6077	Actual torque
Interpolation		0x60C0	Interpolation mode
		0x60C2:001	Interpolation time
		0x60C2:002	Interpolation time
Ramp function		0x6048:001	CiA acceleration: Delta speed
		0x6048:002	CiA acceleration: Delta time
		0x6049:001	CiA deceleration: Delta speed
		0x6049:002	CiA deceleration: Delta time
Speed limitation		0x6080	Max. motor speed
Speed controller		0x2900:001	Gain
		0x2900:002	Reset time
		0x2900:003	Rate time
		0x2901	Speed controller gain adaption
		0x2902	I component load value
Torque limitation		0x60E0	Positive torque limit
		0x60E1	Negative torque limit
		0x6076	Rated motor torque
		0x6072	Max. torque
Field-oriented control		0x6073	Max. current
		0x6075	Rated motor current
		0x2941	Current controller feedforward control
		0x2942:001	Current controller parameters Gain
		0x2942:002	Current controller parameters Reset time
		0x29E2	DC-bus filter time
		0x29E3	Motor voltage filter time
		0x29E0:001	Field weakening controller settings Gain (ASM)
		0x29E0:002	Field weakening controller settings Reset time (ASM)
		0x29E1	Field weakening controller Field limitation
		0x29C0:001	Field controller settings Gain
		0x29C0:002	Field controller settings Reset time
		0x2939	Switching frequency

9.2.3 Signal flow (V/f characteristic control)

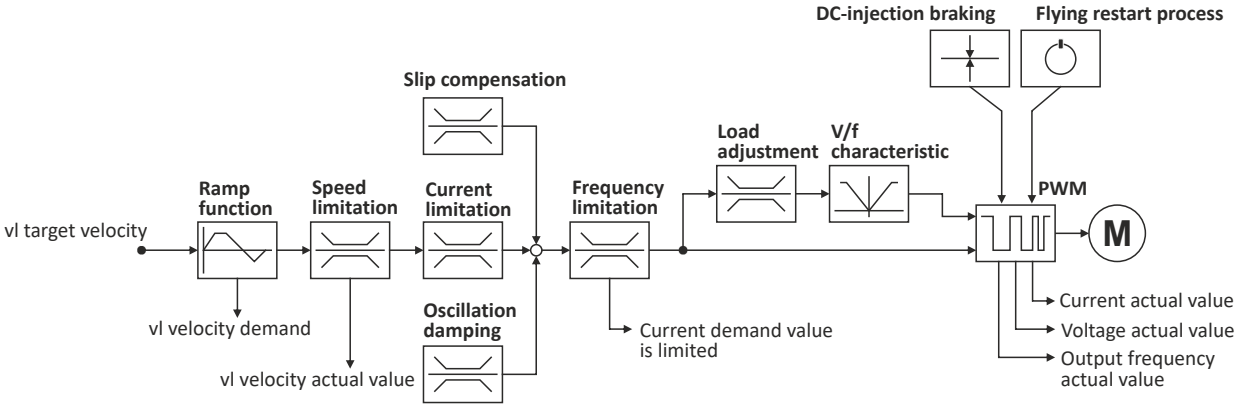

Short overview of the most important parameters

Function	Parameter	Designation
Input data	0x6040	CiA402 control word
	0x2830	Lenze control word
	0x6060	Operating mode: selection
	0x6042	Velocity: setpoint velocity vl
Output data	0x6041	CiA402 control word
	0x2831	Lenze status word
	0x6061	Operating mode: display
	0x6043	Velocity: interpolated setpoint velocity vl
	0x606C	Velocity: actual velocity
	0x6078	Motor: actual current
	0x2D82	Motor: actual voltage - Vrms, phase-phase
	0x2DDD	Device: actual output frequency
Ramp function	0x6048:001	Ramp: speed interval (for acceleration)
	0x6048:002	Ramp: time interval (for acceleration)
	0x6049:001	Ramp: speed interval (for deceleration)
	0x6049:002	Ramp: time interval (for deceleration)
Speed limitation	0x6080	Motor: max. speed
Slip compensation	0x2B09:001	VFC: slip compensation - influence
	0x2B09:002	VFC: slip compensation - filter time
Current limitation	0x2B08:001	Gain
	0x2B08:002	Reset time
	0x6073	Max. current
Oscillation damping	0x2B0A:001	VFC: oscillation damping - gain
	0x2B0A:002	VFC: oscillation damping - filter time
	0x2B0A:003	VFC: oscillation damping - limitation
	0x2B0A:004	VFC: oscillation damping - ramp end frequency
Load adjustment	0x2B07:001	VFC: load adjustment - direction of rotation
	0x2B07:002	VFC: load adjustment - value
V/f characteristic	0x2B01:001	VFC: V/f characteristic - voltage in the reference point
	0x2B01:002	VFC: V/f characteristic - frequency in the reference point
	0x2B06	VFC: voltage boost
	0x2B04	VFC: voltage vector control - setpoint current
	0x2B00	VFC: V/f characteristic - form
	0x2B02:001 ... 0x2B02:011	VFC: user-definable V/f characteristic • Frequency grid points (x1 ... x11)
	0x2B03:001 ... 0x2B03:011	VFC: user-definable V/f characteristic • Voltage grid points (y1 ... y11)
DC-injection braking	0x2B80	DC-injection braking: current

A more detailed representation of the signal flow with all relevant parameters can be found in the »PLC Designer« on the signal flow tab for the servo inverter.

Overview of the most important parameters

Function	Icon	Parameter	Name
Input data		0x6040	CiA control word
		0x2830	Inverter control word
		0x6060	CiA: Operation mode
		0x6042	Set speed
Output data		0x6041	CiA status word
		0x2831	Inverter status word
		0x6061	CiA: Active operation mode
		0x6043	Internal set speed
		0x606C	Actual speed
		0x6078	Actual current
		0x2D82	Motor actual voltage (Veff)
		0x2DDD	Output frequency
Ramp function		0x6048:001	Acceleration ramp CiA acceleration: Delta speed
		0x6048:002	Acceleration ramp CiA acceleration: Delta time
		0x6049:001	Deceleration ramp CiA deceleration: Delta speed
		0x6049:002	Deceleration ramp CiA deceleration: Delta time
Speed limitation		0x6080	Max. motor speed
Slip compensation		0x2B09:001	Slip compensation Gain
		0x2B09:002	Slip compensation Filter time
Current limitation		0x2B08:001	V/f Imax controller Gain
		0x2B08:002	V/f Imax controller Reset time
		0x6073	Max. current
Oscillation damping		0x2B0A:001	Oscillation damping Gain
		0x2B0A:002	Oscillation damping Filter time
		0x2B0A:003	Oscillation damping Limitation
		0x2B0A:004	Oscillation damping Final ramp frequency
Load adaptation		0x2B07:001	Load adaption Direction of rotation
		0x2B07:002	Load adaption Load adaption value
V/f characteristic		0x2B01:001	V/f shape data Base voltage
		0x2B01:002	V/f shape data Base frequency
		0x2B06	Voltage boost
		0x2B04	V/f boost controller - current setpoint
		0x2B00	V/f characteristic shape
		0x2B02:001 ... 0x2B02:011	Frequency grid points (x) user V/f characteristic x1 = f01 ... x11 = f11
		0x2B03:001 ... 0x2B03:011	Voltage grid points (y) user V/f characteristic y1 = U01 (x = f01) ... y11 = U11 (x = f11)

Function	Icon	Parameter	Name
DC-injection braking		0x2B80	Current for DC-injection braking

9.2.4 Setpoint factor

Parameter

Address	Name / setting range / [default setting]	Information
0x604B:001	vl set-point factor: vl set-point factor numerator -32768 ... [**1**] ... 32767	
0x604B:002	vl set-point factor: vl set-point factor denominator -32768 ... [**1**] ... 32767	

9.2.5 Dimension factor

Parameter

Address	Name / setting range / [default setting]	Information
0x604C:001	vl dimension factor: vl dimension factor numerator -2147483648 ... [**1**] ... 2147483647	
0x604C:002	vl dimension factor: vl dimension factor denominator -2147483648 ... [**1**] ... 2147483647	

9.3 Operating mode "CiA 402 cyclic sync velocity mode (csv)"

This operating mode provides a fast velocity follower with torque/feed force feedforward control.

Subfunctions of the operating mode

- Interpolation between communication cycle and control cycle
- Speed control
- Limitation of the motor speed
- Update of the actual values for position, velocity and torque

9.3.1 Default mapping

The default mapping for the cyclic sync velocity mode (csv)" is defined in the following parameters.

Parameter	Designation	Data type
0x1602	RPDO-->axis: cyclic sync velocity mode (csv)	RECORD
0x1606	RPDO-->axis: torque limit	RECORD
0x1A02	Axis-->TPDO: cyclic sync velocity mode (csv)	RECORD

Data received from the Controller (RPDO)

Parameter	Designation	Data type
0x6040	CiA402 control word	UNSIGNED_16
0x2830	Lenze control word	UNSIGNED_16
0x6060	Operating mode: selection	INTEGER_8
0x60B2	Torque: offset	INTEGER_16
0x60FF	Velocity: setpoint velocity	INTEGER_32
0x60E0	Torque: positive limit value	UNSIGNED_16
0x60E1	Torque: negative limit value	UNSIGNED_16

Data sent to the Controller (TPDO)

Parameter	Designation	Data type
0x6041	CiA402 status word	UNSIGNED_16
0x2831	Lenze status word	UNSIGNED_16
0x6061	Operating mode: display	INTEGER_8
0x603F	Error code	UNSIGNED_16
0x606C	Velocity: actual velocity	UNSIGNED_16
0x6077	Torque: actual torque	INTEGER_16
0x6064	Position: actual position	INTEGER_32

9.3.2 Signal flow (servo control)

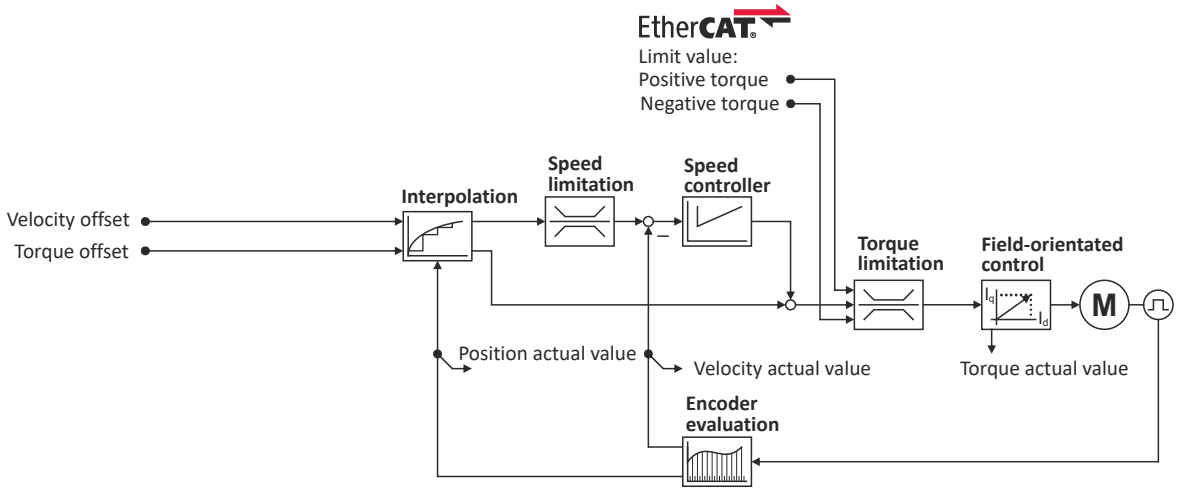

Overview of the most important parameters

Function	Icon	Parameter	Name
Input data		0x6040	CiA control word
		0x2830	Inverter control word
		0x6060	CiA: Operation mode
		0x6042	Set speed
		0x60B1	Offset speed
		0x60B2	Offset torque
		0x60E0	Positive torque limit
		0x60E1	Negative torque limit
Output data		0x6041	CiA status word
		0x2831	Inverter status word
		0x6061	CiA: Active operation mode
		0x6064	Actual position
		0x606C	Actual speed
		0x6077	Actual torque
Interpolation		0x60C0	Interpolation mode
		0x60C2:001	Interpolation time
		0x60C2:002	Interpolation time
Speed limitation		0x6080	Max. motor speed
Speed controller		0x2900:001	Gain
		0x2900:002	Reset time
		0x2900:003	Rate time
		0x2901	Speed controller gain adaption
		0x2902	I component load value
Torque limitation		0x60E0	Positive torque limit
		0x60E1	Negative torque limit
		0x6076	Rated motor torque
		0x6072	Max. torque
Field-oriented control		0x6073	Max. current
		0x6075	Rated motor current
		0x2941	Current controller feedforward control
		0x2942:001	Current controller parameters Gain
		0x2942:002	Current controller parameters Reset time
		0x29E2	DC-bus filter time
		0x29E3	Motor voltage filter time
		0x29E0:001	Field weakening controller settings Gain (ASM)
		0x29E0:002	Field weakening controller settings Reset time (ASM)
		0x29E1	Field weakening controller Field limitation
		0x29C0:001	Field controller settings Gain
		0x29C0:002	Field controller settings Reset time
		0x2939	Switching frequency

9.3.3 Signal flow (V/f characteristic control)

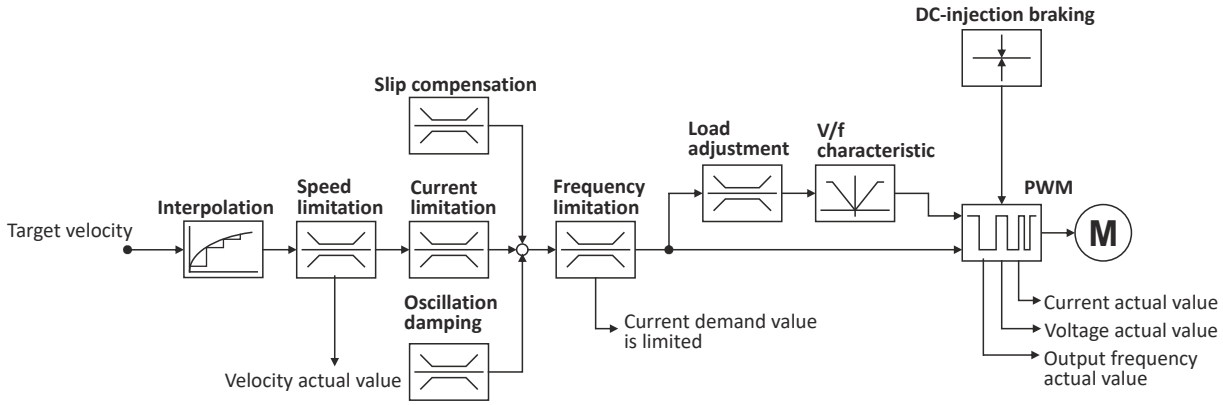

Overview of the most important parameters

Function	Icon	Parameter	Name
Input data		0x6040	CiA control word
		0x2830	Inverter control word
		0x6060	CiA: Operation mode
		0x6042	Set speed
Output data		0x6041	CiA status word
		0x2831	Inverter status word
		0x6061	CiA: Active operation mode
		0x606C	Actual speed
		0x6078	Actual current
		0x2D82	Motor actual voltage (Veff)
		0x2DDD	Output frequency
Interpolation		0x60C0	Interpolation mode
		0x60C2:001	Interpolation time
		0x60C2:002	Interpolation time
Speed limitation		0x6080	Max. motor speed
Slip compensation		0x2B09:001	Slip compensation Gain
		0x2B09:002	Slip compensation Filter time
Current limitation		0x2B08:001	V/f Imax controller Gain
		0x2B08:002	V/f Imax controller Reset time
		0x6073	Max. current
Oscillation damping		0x2B0A:001	Oscillation damping Gain
		0x2B0A:002	Oscillation damping Filter time
		0x2B0A:003	Oscillation damping Limitation
		0x2B0A:004	Oscillation damping Final ramp frequency
Load adaptation		0x2B07:001	Load adaption Direction of rotation
		0x2B07:002	Load adaption Load adaption value
V/f characteristic		0x2B01:001	V/f shape data Base voltage
		0x2B01:002	V/f shape data Base frequency
		0x2B06	Voltage boost
		0x2B04	V/f boost controller - current setpoint
		0x2B00	V/f characteristic shape
		0x2B02:001 ... 0x2B02:011	Frequency grid points (x) user V/f characteristic x1 = f01 ... x11 = f11
		0x2B03:001 ... 0x2B03:011	Voltage grid points (y) user V/f characteristic y1 = U01 (x = f01) ... y11 = U11 (x = f11)
DC-injection braking		0x2B80	Current for DC-injection braking

9.3.4 Control commands and status information

The following control commands can be executed in the "cyclic sync velocity mode" via the CiA402 control word (0x6040):

Control word	State	Function
Bit 4	0	reserved (bit must be set to "0")
Bit 5	0	reserved (bit must be set to "0")
Bit 6	0	reserved (bit must be set to "0")
Bit 8	0 ↗ 1	Stop

The following status information are output via the CiA402 status word (0x6041) in the "cyclic sync velocity mode":

Status word	State	Meaning
Bit 12	0	"Cyclic sync velocity mode" is inactive
	1	"Cyclic sync velocity mode" is active

9.4 Process input data (CiA 402 objects)

Parameter

Address	Name / setting range / [default setting]	Information
0x6042	Set speed -32768 ... [**0**] ... 32767 rpm	Set speed (velocity mode).
0x6046:001	Speed limits: Min. speed 0 ... [**0**] ... 0 rpm	Min. speed (velocity mode).
0x6046:002	Speed limits: Max. speed 2147483647 ... [**2147483647**] ... 2147483647 rpm	Max. speed (velocity mode).
0x6048:001	Acceleration ramp: CiA acceleration: Delta speed 0 ... [**0**] ... 2147483647 rpm	CiA acceleration: Delta speed
0x6048:002	Acceleration ramp: CiA acceleration: Delta time 0 ... [**10**] ... 65535 s	CiA acceleration: Delta time
0x6049:001	Deceleration ramp: CiA deceleration: Delta speed 0 ... [**0**] ... 2147483647 rpm	CiA deceleration: Delta speed
0x6049:002	Deceleration ramp: CiA deceleration: Delta time 0 ... [**10**] ... 65535 s	CiA deceleration: Delta time
0x6060	CiA: Operation mode	CiA: Operation mode
	-13 MS: Manual jog open loop (MOL)	Manufacturer-specific manual control ▸ Operation mode "Manual Jog" 🕮 330
	-12 MS: Pole position identification (PPI)	Manufacturer-specific pole position identification (PLI) ▸ Synchronous motor: Pole position identification (PPI) 🕮 207 ▸ Selection of the PPI method for CiA mode 🕮 208
	0 **No selection**	No selection
	2 CiA: Velocity mode (vl)	▸ Operating mode "CiA 402 velocity mode (vl)" 🕮 147
	8 CiA: Cyclic sync position (csp)	▸ Operating mode "CiA 402 cyclic sync position mode (csp)" 🕮 134
	9 CiA: Cyclic sync velocity mode (csv)	▸ Operating mode "CiA 402 cyclic sync velocity mode (csv)" 🕮 154
	10 CiA: Cyclic sync torque mode (cst)	▸ Operating mode "CiA 402 cyclic sync torque mode (cst)" 🕮 165
0x60B1	Offset speed -2147483648.00 ... [**0.00**] ... 2147483647.00 rpm	Additive value for setpoint velocity or velocity feedforward control - offset speed.
0x60FF	Set speed -2147483648.00 ... [**0.00**] ... 2147483647.00 rpm	Setting of the set speed.

9.5 Process output data (CiA 402 objects)

Parameter

Address	Name / setting range / [default setting]	Information
0x6043	Internal set speed • Read only: x rpm	Display of the internal set speed (velocity demand).
0x6044	Actual speed • Read only: x rpm	Display of the actual speed (velocity mode).
0x606C	Actual speed • Read only: rpm	Display of the actual speed.

9.6 Monitoring the speed deviation

Monitoring of the speed deviation shall only be used in the following control modes:

- Servo control for synchronous motor (SM)
- Servo control for asynchronous motor (ASM)

Monitoring of the speed deviation is effective in the operating modes with speed controller. It monitors the system deviation at the input of the speed controller (see blue arrow):

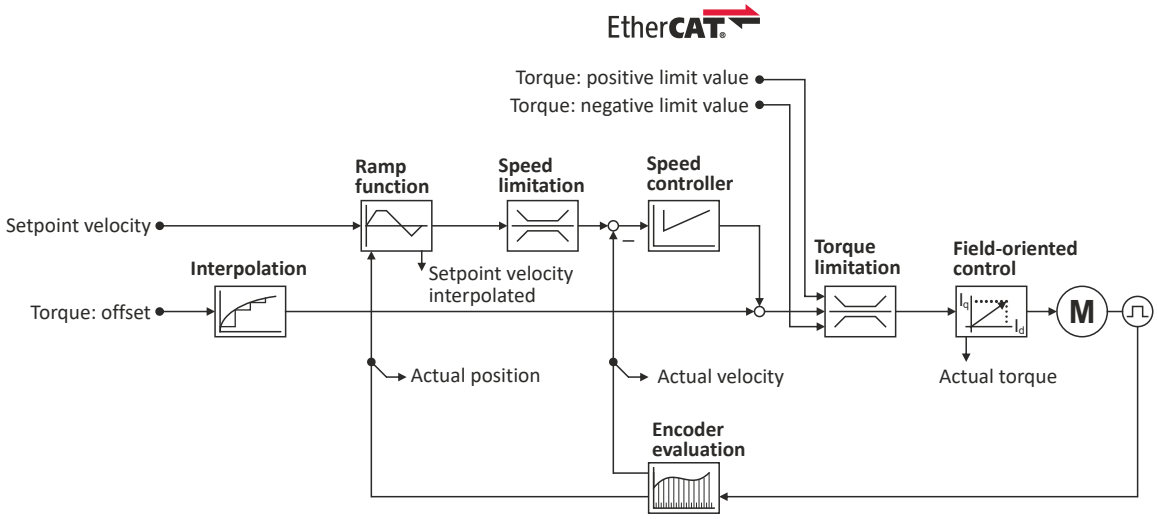

The error response set in 0x2D51:003 is executed if

1. the set tolerance of the speed deviation is 0x2D51:001 exceeded and
2. the exceedance lasts at least as long as set in 0x2D51:002.

Parameter

Address	Name / setting range / [default setting]		Information
0x2D51:001	Position error/speed error - monitoring: Speed error - error threshold 1 ... [**50**] ... 2147483647 rpm		Setting of the error threshold for speed error monitoring.
0x2D51:002	Position error/speed error - monitoring: Speed error - min. time for error 0 ... [**0**] ... 50 ms		Setting of the minimum time a speed error must be pending until an error/warning message is triggered.
0x2D51:003	Position error/speed error - monitoring: Speed error - error response		Setting of the error response of speed error monitoring.
	0	**No response**	▸ Severity 574
	1	Fault > CiA402	
	2	Warning	

10 Configuring the torque control

This operating mode provides a fast torque follower with speed limitation.

Typical applications are, for instance, winders or packaging machines.

Preconditions

The conditions are a correct entry of the motor data (Motor data) and the parameter setting of the motor control (Configuring the motor control).

A torque control can only be implemented in the motor control types to be set with 0x2C00:

- Servoregelung (SC-PSM) [1]
- Servo control (SC ASM) [2]

Thus, first one of these motor control types must be configured.

For details see the following chapter:

▸ Servo control for synchronous motor (SC-PSM) 🕮 224

▸ Servo control for asynchronous motor (SC-ASM) 🕮 225

10.1 Basic setting

1. Set the manufacturer spanning operating mode "CiA: Cyclic sync torque mode (cst) [10]" according to CiA402.
   - A detailed description of this operating mode can be found in the "Operating mode "CiA 402 cyclic sync torque mode (cst)"" section. 📖 165
2. Set the rated motor torque. ▸ 0x6076
3. Set the permissible maximum torque. ▸ 0x6072
   - The maximum torque is preset in 0x6072.
   - The change of the positive and negative limit of the maximum torque is described in the "Torque limits" section. 📖 163
4. Parameterise speed limit. 0x2946
   - The maximum speed is preset. ▸ 0x6080
   - The change of the upper and lower speed limit is described in the "Speed limitation" section. 📖 164
5. Define a torque setpoint for the torque control instead of a speed setpoint. The value is given in percent and based on the rated motor torque set in 0x6076.

The torque control with speed limitation is now active and the inverter responds to the defined torque setpoint.

10.1.1 Torque limits

Details

The positive and negative torque limit can be set independently of each other. The torque limit must be set to the maximum torque. ▸ 0x6072

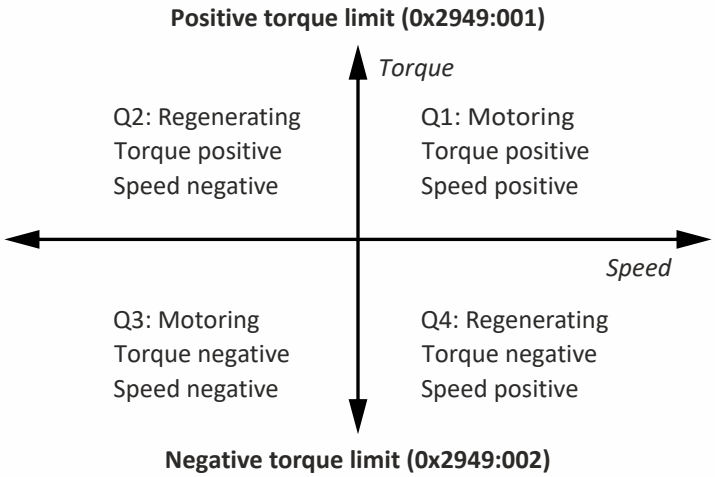

- Display of the current positive torque limit in 0x2949:004.
- Display of the current negative torque limit in 0x2949:003.

The torque limits are also active in the "Velocity Mode" with the "Servo control (SC-ASM)" motor control mode.

Regardless of the setting in 0x2949:004 and 0x2949:004, the maximum torque does not exceed the value configured in 0x6072.

The setting is made in percent with reference to the rated motor torque set in 0x6076.

Parameter

Address	Name / setting range / [default setting]	Information
0x294A:001	Torque limits offset: Torque offset -3276.7 ... [**0.0**] ... 3276.7 %	
0x294A:002	Torque limits offset: Resulting positive torque limit • Read only: x.x %	
0x294A:003	Torque limits offset: Resulting negative torque limit • Read only: x.x %	
0x60B2	Offset torque -3276.8 ... [**0.0**] ... 3276.7 %	Offset torque • 100 % = rated motor power (0x6076)
0x60E0	Positive torque limit 0.0 ... [**100.0**] ... 3276.7 %	Positive torque limit source for speed control with torque limitation. • 100 % = Rated motor torque 0x6076 • The value is taken from the application: 0x500A:128.
0x60E1	Negative torque limit 0.0 ... [**100.0**] ... 3276.7 %	Negative torque limit source for speed control with torque limitation. • 100 % = Rated motor torque 0x6076 • The value is taken from the application: 0x500A:129.

10.1.2 Speed limitation

The torque control controls the assigned torque setpoint within the set speed limits. The actual speed results from the load conditions of the application. For example, high speeds may occur in a torque control if no counter torque is available (load-free machine).

When the actual speed reaches the set speed limits, it is kept on the respective limit value. This function is also called "speed limitation".

Details

The lower and upper speed limit for speed limitation can be set independently of each other.

Parameter

Address	Name / setting range / [default setting]	Information
0x2946:001	Speed limitation: Upper speed limit -480000 ... [**0**] ... 480000 rpm	Upper limit for the speed limitation. • Setting is only effective with the selection "Upper speed limit [5]" in . • Entry via keypad and Lenze Tools is in rpm! • Via RPDO, the unit is vel. unit. and the scaling must be taken into account. • ± 480000 rpm = ±2 ^ 31 [n-unit]
0x2946:002	Speed limitation: Lower speed limit -480000 ... [**0**] ... 480000 rpm	Lower limit for speed limitation. • Setting is only effective with the selection "Lower speed limit [5]" in . • Entry via keypad and Lenze Tools is in rpm! • Via RPDO, the unit is vel. unit. and the scaling must be taken into account. • ± 480000 rpm = ±2 ^ 31 [n-unit]

10.2 Operating mode "CiA 402 cyclic sync torque mode (cst)"

During the quick stop, the current limit 0x6073 and the torque limit 0x6072 are active. The lower of the two limits determines the motor output torque. The torque limits from 0x60E0 and 0x60E1 are not effective during quick stop.

Subfunctions of the operating mode

- Torque control with speed limitation
- Limitation of the motor speed
- Update of the actual values for position, velocity and torque

10.2.1 Default mapping

The default mapping for the "Cyclic sync torque mode" is defined in the following parameters:

Parameter	Designation	Data type
0x1601	RPDO-->axis: cyclic sync torque mode (cst)	RECORD
0x1A01	Axis-->TPDO: cyclic sync torque mode (cst)	RECORD

Data received from the Controller (RPDO)

Parameter	Designation	Data type
0x6040	CiA402 control word	UNSIGNED_16
0x2830	Lenze control word	UNSIGNED_16
0x6060	Operating mode: selection	INTEGER_8
0x60B2	Torque: offset	INTEGER_16
0x6071	Torque: setpoint torque	INTEGER_16
0x2946:1	Speed limitation: upper speed limit	INTEGER_32
0x2946:2	Speed limitation: lower speed limit	INTEGER_32

Data sent to the Controller (TPDO)

Parameter	Designation	Data type
0x6041	CiA402 status word	UNSIGNED_16
0x2831	Lenze status word	UNSIGNED_16
0x6061	Operating mode: display	INTEGER_8
0x603F	Error code	UNSIGNED_16
0x606C	Velocity: actual velocity	UNSIGNED_16
0x6077	Torque: actual torque	INTEGER_16

10.2.2 Signal flow

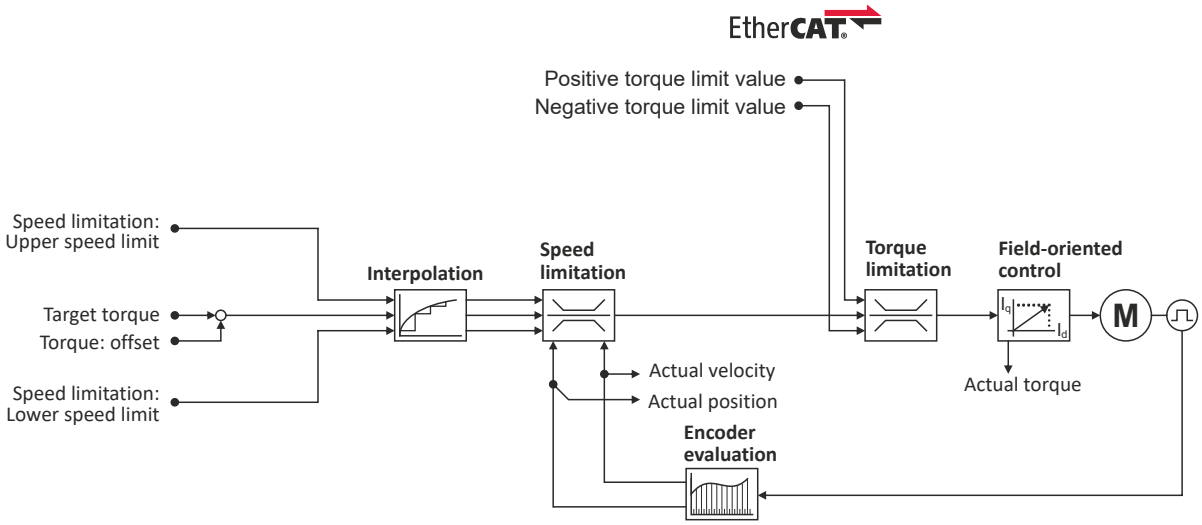

Overview of the most important parameters

Function	Icon	Parameter	Name
Input data		0x6040	CiA control word
		0x2830	Inverter control word
		0x6060	CiA: Operation mode
		0x2946:001	Speed limitation Upper speed limit
		0x2946:002	Speed limitation Lower speed limit
		0x60B2	Offset torque
		0x6071	Set torque
		0x60E0	Positive torque limit
		0x60E1	Negative torque limit
Output data		0x6041	CiA status word
		0x2831	Inverter status word
		0x6061	CiA: Active operation mode
		0x606C	Actual speed
		0x6077	Actual torque
Interpolation		0x60C0	Interpolation mode
		0x60C2:001	Interpolation time
		0x60C2:002	Interpolation time
Speed limitation		0x6080	Max. motor speed
		0x2946:001	Speed limitation Upper speed limit
		0x2946:002	Speed limitation Lower speed limit
Torque limitation		0x60E0	Positive torque limit
		0x60E1	Negative torque limit
		0x6076	Rated motor torque
		0x6072	Max. torque
Field-oriented control		0x6073	Max. current
		0x6075	Rated motor current
		0x2941	Current controller feedforward control
		0x2942:001	Current controller parameters Gain
		0x2942:002	Current controller parameters Reset time
		0x29E2	DC-bus filter time
		0x29E3	Motor voltage filter time
		0x29E0:001	Field weakening controller settings Gain (ASM)
		0x29E0:002	Field weakening controller settings Reset time (ASM)
		0x29E1	Field weakening controller Field limitation
		0x29C0:001	Field controller settings Gain
		0x29C0:002	Field controller settings Reset time
		0x2939	Switching frequency

10.2.3 Control commands and status information

The following control commands can be executed in the "cyclically synchronous torque" operating mode via the CiA402 control word 0x6040:

Control word	State	Function
Bit 4	0	*reserved* (bit must be set to "0")
Bit 5	0	*reserved* (bit must be set to "0")
Bit 6	0	*reserved* (bit must be set to "0")
Bit 8	0↗1	Stop

The following status information are output via the CiA402 status word 0x6041 in the "cyclic sync torque mode":

Status word	State	Meaning
Bit 12	0	"Cyclic sync torque mode" is inactive
	1	"Cyclic sync torque mode" is active

10.3 Process input data (CiA 402 objects)

Parameter

Address	Name / setting range / [default setting]		Information
0x6060	CiA: Operation mode		CiA: Operation mode
	-13	MS: Manual jog open loop (MOL)	Manufacturer-specific manual control ▸ Operation mode "Manual Jog" 🕮 330
	-12	MS: Pole position identification (PPI)	Manufacturer-specific pole position identification (PLI) ▸ Synchronous motor: Pole position identification (PPI) 🕮 207 ▸ Selection of the PPI method for CiA mode 🕮 208
	0	**No selection**	No selection
	2	CiA: Velocity mode (vl)	▸ Operating mode "CiA 402 velocity mode (vl)" 🕮 147
	8	CiA: Cyclic sync position (csp)	▸ Operating mode "CiA 402 cyclic sync position mode (csp)" 🕮 134
	9	CiA: Cyclic sync velocity mode (csv)	▸ Operating mode "CiA 402 cyclic sync velocity mode (csv)" 🕮 154
	10	CiA: Cyclic sync torque mode (cst)	▸ Operating mode "CiA 402 cyclic sync torque mode (cst)" 🕮 165
0x6071	Set torque -3276.8 ... [**0.0**] ... 3276.7 %		• 100 % = Rated motor torque 0x6076 The inverter does not support the CiA 402 torque mode.

10.4 Process output data (CiA 402 objects)

Parameter

Address	Name / setting range / [default setting]	Information
0x6074	Internal set torque • Read only: x.x %	Display of the internal set torque. • 100 % = Rated motor torque 0x6076
0x6077	Actual torque • Read only: x.x %	Display of the actual torque. • 100 % = Rated motor torque 0x6076

10.5 Setpoint diagnostics

The following parameters provide information on the setpoints set for torque control.

Parameter

Address	Name / setting range / [default setting]	Information
0x2DD5	Torque setpoint • Read only: x.xx Nm	Display of the current torque setpoint.

11 Configuring the feedback system

This chapter provides information on how to use feedback systems.

The inverter can be equipped to allow the connection of up to two independent feedback systems.

Each of the two feedback systems

- Is placed in a designated slot in the lower part of the inverter
- Has an encoder connection on its front side
- Is an optional equipment feature of the inverter

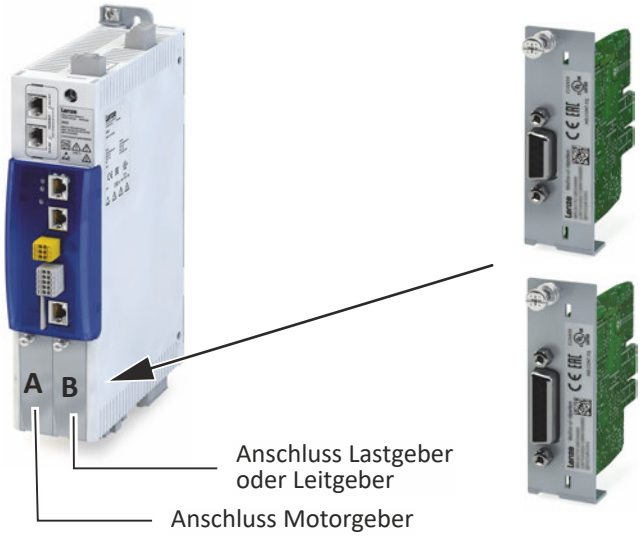

Please note that either the parameters for resolver evaluation or the parameters for encoder evaluation will be effective depending on the feedback system selected.

11.1 Configure feedback system for motor control

The parameter settings for the motor feedback system are accessed in »EASY Starter« via the following path:

- **Settings** tab
  - Basic setting \ Motor feedback (A)

Here, you have the choice of using the following feedback systems:

- Resolver
- Encoder

You can select the feedback system that you wish to use by pressing the correspondingly named button.

11.1.1 General settings

This chapter provides information on general settings of feedback systems for the motor control.

Pressing the **Select resolver** or **Select encoder** button displays a list of resolvers or encoders.

If the displayed list contains the feedback system used, the data is applied automatically.

Otherwise, you must enter the data of the feedback system manually.

Monitoring of the encoder cable for wire breakage

The resolver or encoder cable can be monitored for wire breakage in the default settings of parameter 0x2C45.

⚠ DANGER!

When the encoder / resolver is used as a motor encoder, safe motor operation is not possible in the event of an error.

Destruction of system parts

► **Fault** should always be used as a response for resolver/encoder wire breakage monitoring.

► To prevent interference injections when using an encoder, only use shielded motor and encoder cables.

Wire breakage monitoring trips in the following cases:

- Resolver
  - Wire breakage in the encoder cable
  - When the resolver impedance is too great
  - In the event of interference injections (EMC interference)
- Encoder
  - Wire breakage in the encoder cable

Sensitivity of wire breakage monitoring

The sensitivity of wire breakage monitoring can be set as a percentage using the 0x2C47 parameter.

Reducing the monitoring sensitivity is advantageous in environments that are severely affected by EMC problems.

If the sensitivity is not reduced (100 %), the software response time of monitoring in case of an encoder is approx. 3.5 ms and in case of a resolver 0.3 ms.

Halving the sensitivity means doubling the response time.

NOTICE

A reduced sensitivity delays the response in case of wire breakage!

Destruction of system parts by reduced sensitivity of the open-circuit monitoring.

► Increase the sensitivity to reduce the monitoring response time.

Parameter

Address	Name / setting range / [default setting]		Information
0x2C45	Motor feedback error response		Selection of the response to the triggering of the encoder signal loss monitoring. The monitoring is only active if the HTL encoder is set as feedback system for the motor control. Associated event ID: • 537490179 | 0x20097303 - Fault - Motor feedback
	0	No response	▸ Severity 574
	1	**Fault > CiA402**	
	2	Warning	
0x2C46	Number of the absolute ascertainable revolutions of motor encoder • Read only		Is set by the firmware according to the available version: • 0: no absolute value encoder (sin/cos encoder) or resolver with number of pole pairs > 1 • 1: Single-turn absolute value encoder or resolver with number of pole pairs = 1 • >1: Multi-turn absolute value encoder
0x2C47	Open circuit detection sensitivity of motor encoder 1 ... [**100**] ... 100 %		The sensitivity can be reduced by percentage, e. g. in case of EMC interferences.
0x608F:001	Position encoder resolution: Encoder increments • Setting can only be changed if the inverter is disabled.		Position encoder resolution: Encoder increments Setting the number of bits to be used for resolving a mechanical motor revolution.
	65536	**16 bit**	
	262144	18 bit	
	1048576	20 bit	
	4194304	22 bit	
	16777216	24 bit	
	67108864	26 bit	
	268435456	28 bit	
	1073741824	30 bit	
0x608F:002	Position encoder resolution: Motor revolutions 1 ... [**1**] ... 1 • Setting can only be changed if the inverter is disabled.		Denominator of the position resolution: Number of motor revolutions. Only setting "1" is accepted.
0x6090:001	Velocity encoder resolution: Encoder increments/s 0 ... [**33554432**] ... 2147483647 • Setting can only be changed if the inverter is disabled.		Setting of the encoder increments/s.
0x6090:002	Velocity encoder resolution: Motor revolutions/s 0 ... [**125**] ... 2147483647 • Setting can only be changed if the inverter is disabled.		Setting of the motor revolutions/s.

11.1.2 Resolver settings

Resolvers with a number of pole pairs > 1 are not absolute value encoders.

Bit 4 in 0x2833 (Lenze status word 2) therefore remains set to "0".

The "distinguishable revolutions" specification in 0x2C46 is also set to "0".

The following applies to synchronous motors:

- When the number of motor pole pairs to the number of resolver pole pairs is an integer ratio (0x2C01:001), the pole position only has to be identified once.
- When the number of motor pole pairs to the number of resolver pole pairs is a non-integer ratio (0x2C01:001), the pole position must be identified every time the inverter is connected to 24 V. ▸ Synchronous motor: Pole position identification (PPI) 📖 207

Parameter

Address	Name / setting range / [default setting]		Information
0x2822:025	Axis commands: Get motor encoder characteristic (resolver)		Values determined in order to compensate for resolver faults.
	0	**Off/Ready**	
	1	On/Start	
	2	In progress	
	3	Action cancelled	
	4	No access	
	5	No access (Device disabled)	
0x2C43	Motor encoder resolver number of pole pairs 1 ... [**1**] ... 10 • Setting can only be changed if the inverter is disabled.		Setting of the number of pole pairs.

11.1.2.1 Resolver error compensation

The actual position detected by the resolver is not exactly the same as the real physical position. There are always more or less substantial deviations.

An identification run of the resolver automatically determines the adjustment values required to compensate for the resolver error.

The determined values have a corrective effect on the cause of occurrence in the following parameters:

Cause	Remedy
Sine and cosine track do not magnetize orthogonally to each other.	0x2C44:001 Correction of the angle by means of which the two resolver tracks are supplied in a manner relative to one another.
The inductances of the sine and cosine track of the resolver have slightly different values.	0x2C44:002 and 0x2C44:003 Adjusting the gains of the digital-analog converters which feed the resolver tracks.

Conditions for executing the identification run

- Motor
  - If possible, execute the identification run before the motor is installed in the machine. Bigger load changes at the motor may have a negative impact on the identification result.
  - The motor and resolver must be properly connected to the inverter.
  - The motor must rotate freely.
- Inverter
  - The inverter must be supplied with mains voltage. Check: 0x6041, bit 4 = TRUE.
  - The control electronics must be supplied with voltage. For some designs, an external voltage source is required for this purpose.
  - The inverter must be connected "online" to the Engineering Tool.
- Correct parameterization:
  - Number of resolver pole pairs (0x2C43)
  - Motor speed-controlled or position-controlled in servo control mode

How to run an identification

1. Initiate identification run with parameter 0x2822:025.
2. Enable inverter.
   The identification run is in standby mode.
3. Approach a constant speed between n = 500 rpm and n = 3000 rpm.
   The identification run is started automatically after the drive has reached a constant speed and maintained this speed for the time defined in .

   This speed is saved for the identification run. In order that the identification run can be continued again, e.g. after an interruption, the drive must be operated again with this speed.

   End of identification run

   After the resolver error identification has been executed successfully, the parameters 0x2C44:001 ... 0x2C44:003 are written automatically. The resolver now works with these settings.

   Brief interruption of the identification run

   A short-time interruption, e.g. by removing the controller enable, does not stop the measurement. It is continued after the controller is enabled anew. For the duration of the interruption, the following status message is displayed: "Identification interrupted temporarily".

   Cancelling the identification run

   The measurement is canceled in case the inverter disable lasts longer or after the timeout time has elapsed. A timeout error is displayed for the identification run, see error messages in the logbook.
4. If the measurement was successful, the motor can be stopped
5. After the process has been completed, save the changed parameters 0x2C44:001 ... 0x2C44:003 in the inverter.

The »EASY Starter« serves to save the parameter setting of the inverter, see ▸ Saving the parameter settings. 📖 39

Possible responses during the execution

- Motor running may appear somewhat uneven during identification.
- The direction of rotation can change.

  This has no negative impact on the quality of the identification. In this case, the inverter automatically interrupts the identification run and automatically continues it if a constant speed is reached again.
- If the motor already installed in the machine does not have sufficient range in one direction for executing the identification run, you can also reverse the driving direction while the identification is active. In this case, the identification automatically switches to the "Identification temporarily interrupted ". The status is deactivated as soon as a constant speed has been reached again.

In the event of an interruption, the identification run is stopped. An error message is displayed.

If 0 % is set, the gain of the respective resolver track is only 95 % of the Lenze setting.

The detected gain can assume values in the range of 0 ... 100 %.

In case of a successful resolver error compensation, only one of the two gains is adjusted. The other value remains at 100 %.

Deactivating the resolver error compensation

For deactivating the resolver error compensation, the respective parameters must be reset again to the Lenze setting.

Parameter

Address	Name / setting range / [default setting]		Information
0x2C44:001	Motor encoder identification (Resolver): Angle -100 ... [**0**] ... 100		Setting of the angle to the resolver error compensation.
0x2C44:002	Motor encoder identification (Resolver): Cosine track gain 0 ... [**100**] ... 100 %		Setting of the gain of the cosine track to the resolver error compensation.
0x2C44:003	Motor encoder identification (Resolver): Sine track gain 0 ... [**100**] ... 100 %		Setting of the gain of the sine track to the resolver error compensation.
0x2C44:006	Motor encoder identification (Resolver): Identification status • Read only		Display of the resolver identification status.
	Bit 0	Identification activated	TRUE if: • Identification has been started. • Controller enable is active. FALSE if: • Identification has been aborted or completed successfully. • A timeout error is active. • The 24V supply has been switched on and default settings are loaded.
	Bit 2	Identification is running	TRUE if: • Identification is running. FALSE if: • The motor speed has fallen below the minimum speed of 500 rpm. • The identification process has been aborted temporarily and is on standby.
	Bit 3	Identification successful	TRUE if: • Identification has been completed successfully. FALSE if: • The identification is not completed yet after default settings were loaded.
	Bit 4	Identification failed	TRUE if: • A timeout error has occurred. FALSE if: • Identification has been completed successfully.
0x2C44:008	Motor encoder identification (Resolver): Cosine track offset -100.000 ... [**0.000**] ... 100.000 %		
0x2C44:009	Motor encoder identification (Resolver): Sine track offset -100.000 ... [**0.000**] ... 100.000 %		
0x2C44:011	Motor encoder identification (Resolver): Cyclic online compensation		
	0		
	1		
0x2C44:012	Motor encoder identification (Resolver): Harmonic for cyclic online compensation 10 ... [**22**] ... 99		

11.1.3 Encoder settings

In general, an encoder is a measuring system which serves to detect the velocity/speed and the position of a kinematics or motor.

Details

If a resolver variant is to be plugged into the respective slot of the inverter as a feedback system, the parameters in this section have no function.

Parameter

Address	Name / setting range / [default setting]	Information
0x2C40	Motor encoder type • Setting can only be changed if the inverter is disabled. **1** **SinCos encoder** 2 HIPERFACE® SinCos absolute value encoder 3 TTL encoder 5 SSI absolute value encoder 6 SSI SinCos absolute value encoder	Selection of the encoder type.
0x2C42:001	Encoder settings: Increments/revolution 1 ... [**1024**] ... 262143 • Setting can only be changed if the inverter is disabled.	Setting of the encoder number of increments per revolution (according to manufacturer data/encoder data sheet).
0x2C42:002	Encoder settings: Supply voltage 5.0 ... [**5.0**] ... 12.0 V • Setting can only be changed if the inverter is disabled.	Setting of the supply voltage.

11.1.3.1 SinCos encoder

The following SinCos encoder types without HIPERFACE® protocol are supported by the inverter:

Type	Increments/revolution	Absolute revolutions
IG1024-5V-V3 (RVS58S)	1024	0
IG2048-5V-S (ITD22)	2048	0
IG2048-5V-S	2048	0

11.1.3.2 SinCos absolute value encoder with HIPERFACE® protocol

The following SinCos encoder types with HIPERFACE® protocol are supported by the inverter:

Type	Increments/revolution	Absolute revolutions	Type code 0x2C41:001
AM1024-8V-H (SRM50)	1024	4096 (Multiturn)	39
AM1024-8V-H (SFM60)	1024		39
AM1024-8V-K2 (SRM50S)	1024		39
AM128-8V-H (SKM36)	128		55
AM16-8V-H (SEL37)	16		71
AM16-8V-H (SEL52)	16		71
AM512-8V-H (SCM70)	512		7
AS1024-8V-H (SRS50)	1024	4096 (Single-turn)	34
AS1024-8V-K2 (SRS50S)	1024		34
AS16-8V-H (SEK37)	16		66
AS16-8V-H (SEK52)	16		66
AS512-8V-H (SCS70)	512		2

Use of non-supported encoder types

If the type code of the encoder used is not listed in the table of supported encoder types, this encoder can be introduced to the inverter via the 0x2C41:002 and 0x2C41:003 parameters.

In this context, please also observe the information provided in the parameter description 0x2C41:008.

Parameter

Address	Name / setting range / [default setting]	Information
0x2822:026	Axis commands: Get motor encoder information (HIPERFACE®)	Command for reading out data from the connected motor encoder.
	0 Off/Ready	
	1 On/Start	
	2 In progress	
	3 Action cancelled	
	4 No access	
	5 No access (Device disabled)	
0x2C41:001	Motor encoder settings (HIPERFACE®): Type code detected • Read only	Type code read out of the encoder. This value is "0" if ... • a sin/cos encoder is set (0x2C40 = 2); • a communication error has occurred.
0x2C41:002	Motor encoder settings (HIPERFACE®): Type code manual input 0 ... [**0**] ... 255 • Setting can only be changed if the inverter is disabled.	Manual setting of the encoder type code (display in 0x2C41:001).
0x2C41:003	Motor encoder settings (HIPERFACE®): Manual input - Number of detectable motor encoder revolutions 1 ... [**1**] ... 65535 • Setting can only be changed if the inverter is disabled.	Manual setting of the number of distinguishable revolutions.
0x2C41:004	Motor encoder settings (HIPERFACE®): Error response	Selection of the response for communication errors or in the event of an unknown encoder. Associated event IDs: • 537490304 | 0x20097380 - Motor encoder - Communication error • 537490305 | 0x20097381 - Motor encoder - wrong absolute value because motor speed is too high • 537526038 | 0x2009FF16 - Connected HIPERFACE® motor encoder is not supported
	0 No response	▸ Severity 📖 574
	1 Fault > CiA402	
	2 Warning	

Address	Name / setting range / [default setting]	Information
0x2C41:005	Motor encoder settings (HIPERFACE®): Serial number • Read only	The displayed serial number can be used for identifying an encoder change.
0x2C41:006	Motor encoder settings (HIPERFACE®): Actual position (raw data) • Read only	The encoder-internal position value is output without being converted.
0x2C41:007	Motor encoder settings (HIPERFACE®): No. of periods detected • Read only	Display of the encoder increment according to encoder nameplate or type code.
0x2C41:008	Motor encoder settings (HIPERFACE®): Type code verification • Read only	If an encoder is connected that is not supported by the firmware, it will be displayed here. In this case, the same response takes place as in case of a communication error. The error can be removed by manually setting the type code in 0x2C41:002. This serves to signalise to the firmware that the number of distinguishable revolutions is as well set correctly in 0x2C41:003 by the user.
	0 Unknown - manual data input	If an encoder is connected that is not supported by the firmware, it will be displayed here.
	1 Known - parameterisation ok	
0x2C41:009	Motor encoder settings (HIPERFACE®): Encoder type • Read only	Display of the detected encoder type (rotary/linear).
	0 Rotative encoder	
	1 Linear encoder	
0x2C41:010	Motor encoder settings (HIPERFACE®): Period length of linear encoder • Read only: x nm	Display of the period length of the linear encoder.

11.1.3.3 SSI encoder

SSI absolute value encoder (**S**ynchronous **S**erial **I**nterface) generate the angle information by optically scanning a code disc (e.g. as Gray Code). Each (absolute) angular position of the encoder corresponds to a code pattern that can be uniquely assigned.

All encoders that use the Stegmann SSI protocol are supported:

- Supported bit rates for SSI communication: 150 ... 1000 kbits
- Supported data word widths: 1 ... 31 bits (effective)
- Supported output code of the SSI encoder: Gray or Binary
- Cycle time: 62.5 µs, 125 µs and 250 µs .
- Encoder supply: U < 12 V, I ≤ 0.25 A

How to parameterise the SSI encoder:

1. Set the supply voltage of the SSI encoder used in 0x2C42:002.
2. Set selection "5: SSI encoder" as the encoder type in 0x2C40.
3. Set the transmission rate for SSI communication in 0x2C4A:001.
   With the SSI protocol, the permissible transmission rate decreases as the cable lengths increase. A safe transmission rate must be set according to the length of the encoder cable used and the electromagnetic interference level.
4. Set the telegram length in 0x2C4A:002.
   The telegram length reflects the number of data bits used for transmission of a complete SSI data packet.
5. Break the received SSI data word down into partwords and, if necessary, activate data conversion of Gray into binary code.

Parameter

Address	Name / setting range / [default setting]	Information
0x2C4A:001	Motor encoder (SSI) protocol parameters: Bit rate 150 ... [**300**] ... 1000 kbps • Setting can only be changed if the inverter is disabled.	To enable a stable transmission rate, the length of the encoder cable used and any electromagnetic interference levels must be taken into account when setting the value.

Address	Name / setting range / [default setting]	Information
0x2C4A:002	Motor encoder (SSI) protocol parameters: Telegram length 1 ... [**25**] ... 31 • Setting can only be changed if the inverter is disabled.	The set value specifies the number of data bits which are transmitted as a complete SSI data packet.
0x2C4A:003	Motor encoder (SSI) protocol parameters: Bits/ revolution 1 ... [**13**] ... 31 • Setting can only be changed if the inverter is disabled.	Resolution of the encoder. For example, the resolution for the preset value is "13": 2^{13} = 8196 (bits/revolution).
0x2C4A:004	Motor encoder (SSI) protocol parameters: Position data start bit 0 ... [**0**] ... 30 • Setting can only be changed if the inverter is disabled.	Indicates the position in the telegram where the position data word begins.
0x2C4A:005	Motor encoder (SSI) protocol parameters: Data package 1 start bit 0 ... [**0**] ... 30 • Setting can only be changed if the inverter is disabled.	Indicates the position in the telegram where data packet 1 begins.
0x2C4A:006	Motor encoder (SSI) protocol parameters: Data package 2 start bit 0 ... [**0**] ... 30 • Setting can only be changed if the inverter is disabled.	Indicates the position in the telegram where data packet 2 begins.
0x2C4A:007	Motor encoder (SSI) protocol parameters: Data package 3 start bit 0 ... [**0**] ... 30 • Setting can only be changed if the inverter is disabled.	Indicates the position in the telegram where data packet 3 begins.
0x2C4A:008	Motor encoder (SSI) protocol parameters: Position data length 0 ... [**0**] ... 30 • Setting can only be changed if the inverter is disabled.	SSI position data length
0x2C4A:009	Motor encoder (SSI) protocol parameters: Data package 1 length 0 ... [**0**] ... 30 • Setting can only be changed if the inverter is disabled.	Length of data packet 1.
0x2C4A:010	Motor encoder (SSI) protocol parameters: Data package 2 length 0 ... [**0**] ... 30 • Setting can only be changed if the inverter is disabled.	Length of data packet 2.
0x2C4A:011	Motor encoder (SSI) protocol parameters: Data package 3 length 0 ... [**0**] ... 30 • Setting can only be changed if the inverter is disabled.	Length of data packet 3.
0x2C4A:012	Motor encoder (SSI) protocol parameters: Position data coding • Setting can only be changed if the inverter is disabled. **0** **Binary** 1 Gray	Coding of position data word (read only). If a value of "0" is set for the position data length in 0x2C4A:008, then the value displayed for this parameter is also "0".
0x2C4A:013	Motor encoder (SSI) protocol parameters: Data package 1 coding • Setting can only be changed if the inverter is disabled. **0** **Binary** 1 Gray	Coding of data packet 1

Address	Name / setting range / [default setting]	Information
0x2C4A:014	Motor encoder (SSI) protocol parameters: Data package 2 coding • Setting can only be changed if the inverter is disabled.	Coding of data packet 2
	0 **Binary**	
	1 Gray	
0x2C4A:015	Motor encoder (SSI) protocol parameters: Data package 3 coding • Setting can only be changed if the inverter is disabled.	Coding of data packet 3
	0 **Binary**	
	1 Gray	
0x2C4A:016	Motor encoder (SSI) protocol parameters: Position raw data • Read only	Raw value of position data word (read only). If a value of "0" is set for the position data length in 0x2C4A:008 , then the value displayed for this parameter is also "0".
0x2C4A:017	Motor encoder (SSI) protocol parameters: Data package 1 raw data • Read only	Raw value of data packet 1 (read only). If a value of "0" is set for the data packet length 1 in 0x2C4A:013 , then the value displayed for this parameter is also "0".
0x2C4A:018	Motor encoder (SSI) protocol parameters: Data package 2 raw data • Read only	Raw value of data packet 2 (read only). If a value of "0" is set for the data packet length 2 in 0x2C4A:014 , then the value displayed for this parameter is also "0".
0x2C4A:019	Motor encoder (SSI) protocol parameters: Data package 3 raw data • Read only	Raw value of data packet 3 (read only). If a value of "0" is set for the data packet length 3 in 0x2C4A:015 , then the value displayed for this parameter is also "0".
0x2C4A:020	Motor encoder (SSI) protocol parameters: Encoder type • Setting can only be changed if the inverter is disabled.	
	0 **Rotative encoder**	
	1 Linear encoder	
0x2C4A:021	Motor encoder (SSI) protocol parameters: Position raw data scaled by 0x608F • Read only: x inc	
0x2C4A:022	Motor encoder (SSI) protocol parameters: Monoflop time 0 ... [**0**] ... 500 µs • Setting can only be changed if the inverter is disabled.	
0x2C4A:023	Motor encoder (SSI) protocol parameters: Resulting SSI-telegram cycle time • Read only: x.x µs	

11.1.3.4 One cable technology (OCT) via HIPERFACE DSL®

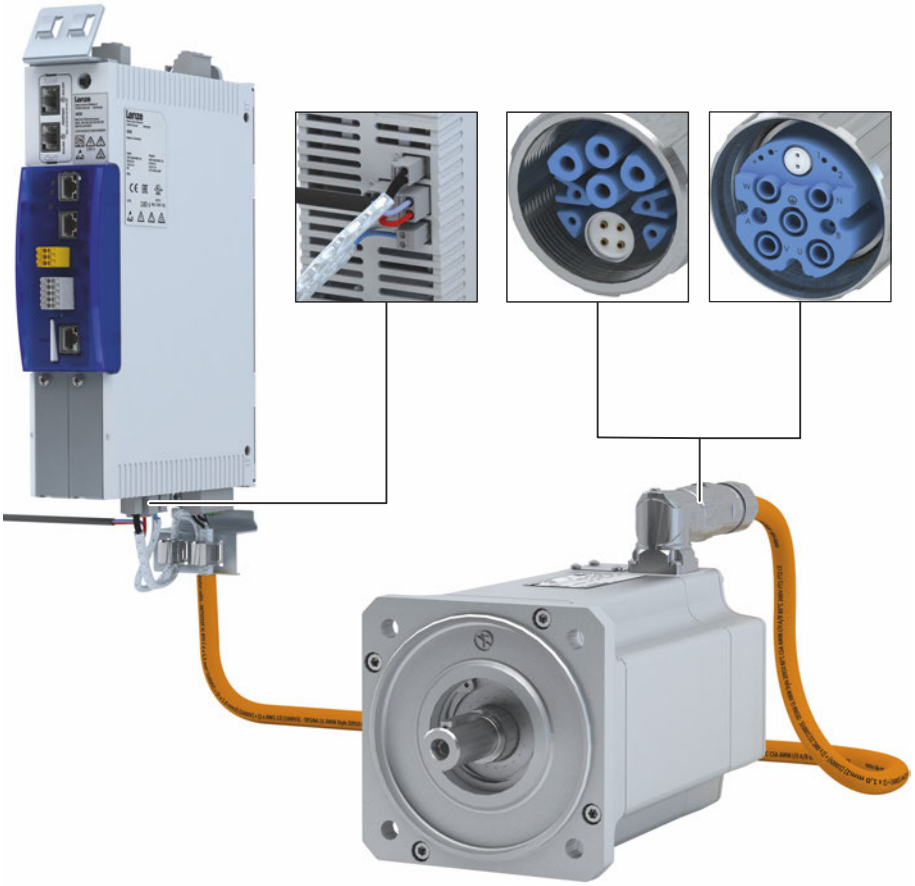

Fig. 57: Example setup HIPERFACE DSL® (OCT)

Preconditions

- The One Cable Technology is only available in the devices < 22 kW.
- The One Cable Technology (OCT) is possible with MCS and m850 servo motors.
- The motor must be provided with a HIPERFACE DSL® encoder.
- Make sure that no motor encoder module is plugged in slot A.
- Connection cable
  - The EYP008xxxxxxM11A00 or EYP008xxxxxxM12A00 hybrid cable must be used.
  - Different lengths up to 100 m are available.
  - The hybrid cables have only basic insulation to the power electronics.

Application range

The use of One Cable Technology (OCT) depends on the combination of the basic device firmware with the safety firmware:

	Use of One Cable Technology (OCT)							
Basic device firmware	As of V01.06.04	V01.05.03	V01.05.02	V01.04.02	V01.04.01	V01.03.07	V01.02.03	V01.01.03
Safety firmware	As of V01.03.03	V01.02.03	V01.02.03	V01.02.03	V01.02.03	V01.01.01	V01.00.01	-
With device variant								
"Basic Safety - STO"	●	●	●	●	●	●	-	-
"Extended Safety"	●	-	-	-	-	-	-	-

Parameterize HIPERFACE DSL® (OCT)

Parameter **Axis settings: Function X109** = 10 to activate HIPERFACE DSL® (OCT). ▸ 0x2DE1:001

Parameter

Address	Name / setting range / [default setting]		Information
0x2DE1:001	Axis settings: Function of X109		
	0	None	

Address	Name / setting range / [default setting]		Information
	10	HIPERFACE DSL® (OCT)	
	20	**PTC**	
0x2C4B:001	Motor encoder (HDSL): Release version • Read only		
0x2C4B:002	Motor encoder (HDSL): Release Date • Read only		
0x2C4B:003	Motor encoder (HDSL): Encoder ID • Read only		
0x2C4B:004	Motor encoder (HDSL): Type of encoder • Read only		
0x2C4B:005	Motor encoder (HDSL): Resolution • Read only		
0x2C4B:006	Motor encoder (HDSL): Measurement range • Read only		
0x2C4B:007	Motor encoder (HDSL): Type name • Read only		
0x2C4B:008	Motor encoder (HDSL): Serial number • Read only		
0x2C4B:009	Motor encoder (HDSL): Device version • Read only		
0x2C4B:010	Motor encoder (HDSL): Firmware date • Read only		
0x2C4B:011	Motor encoder (HDSL): EEPROM size • Read only		
0x2C4B:012	Motor encoder (HDSL): Safe Channel 2 Resolution • Read only		
0x2C4B:020	Motor encoder (HDSL): Delay / RSSI • Read only		
	Bit 0	Cable delay, bit 0	
	Bit 1	Cable delay, bit 1	
	Bit 2	Cable delay, bit 2	
	Bit 3	Cable delay, bit 3	
	Bit 4	RSSI, bit 0	
	Bit 5	RSSI, bit 1	
	Bit 6	RSSI, bit 2	
	Bit 7	RSSI, bit 3	
0x2C4B:021	Motor encoder (HDSL): Quality monitoring • Read only		
	Bit 0	QM, bit 0	
	Bit 1	QM, bit 1	
	Bit 2	QM, bit 2	
	Bit 3	QM, bit 3	
	Bit 7	LINK	
0x2C4B:022	Motor encoder (HDSL): Slave RSSI • Read only		
	Bit 0	SRSSI, bit 0	
	Bit 1	SRSSI, bit 1	
	Bit 2	SRSSI, bit 2	
0x2C4B:023	Motor encoder (HDSL): Supply voltage • Read only: x.xxx V		
0x2C4B:024	Motor encoder (HDSL): Rotation speed range • Read only: x rpm		
0x2C4B:025	Motor encoder (HDSL): Auswahl		
	0	**No value**	
	1	Lifetime	
	2	Sensor monitor	
	3	Rotation speed	
	4	Temperature	

Address	Name / setting range / [default setting]		Information
0x2C4B:026	Motor encoder (HDSL): Value • Read only		
0x2C4B:040	Motor encoder (HDSL): Events • Read only		
	Bit 1	FREL: Channel free for "long message"	
	Bit 2	QMLW: Quality monitoring low value warning	
	Bit 4	ANS: Erroneous answer to "long message"	
	Bit 5	MIN: Message initialization	
	Bit 8	PRST: Protocol reset warning	
	Bit 9	DTE: Estimator Deviation Threshold Error	
	Bit 11	POS: Estimator turned on	
	Bit 14	SUM: Remote event monitoring	
	Bit 15	INT: Interrupt status	
0x2C4B:041	Motor encoder (HDSL): Status summaries • Read only		
	Bit 0	SUM0	
	Bit 1	SUM1	
	Bit 2	SUM2	
	Bit 3	SUM3	
	Bit 4	SUM4	
	Bit 5	SUM5	
	Bit 6	SUM6	
	Bit 7	SUM7	
0x2C4B:042	Motor encoder (HDSL): Encoder status, byte 0 • Read only		
	Bit 0	Encoder status bit 0	
	Bit 1	Encoder status bit 1	
	Bit 2	Encoder status bit 2	
	Bit 3	Encoder status bit 3	
	Bit 4	Encoder status bit 4	
	Bit 5	Encoder status bit 5	
	Bit 6	Encoder status bit 6	
	Bit 7	Encoder status bit 7	
0x2C4B:043	Motor encoder (HDSL): Encoder status, byte 1 • Read only		
	Bit 0	Encoder status bit 8	
	Bit 1	Encoder status bit 9	
	Bit 2	Encoder status bit 10	
	Bit 3	Encoder status bit 11	
	Bit 4	Encoder status bit 12	
	Bit 5	Encoder status bit 13	
	Bit 6	Encoder status bit 14	
	Bit 7	Encoder status bit 15	
0x2C4B:044	Motor encoder (HDSL): Encoder status, byte 2 • Read only		
	Bit 0	Encoder status bit 16	
	Bit 1	Encoder status bit 17	
	Bit 2	Encoder status bit 18	
	Bit 3	Encoder status bit 19	
	Bit 4	Encoder status bit 20	
	Bit 5	Encoder status bit 21	
	Bit 6	Encoder status bit 22	
	Bit 7	Encoder status bit 23	

Address	Name / setting range / [default setting]		Information
0x2C4B:045	Motor encoder (HDSL): Encoder status, byte 3 • Read only		
	Bit 0	Encoder status bit 24	
	Bit 1	Encoder status bit 25	
	Bit 2	Encoder status bit 26	
	Bit 3	Encoder status bit 27	
	Bit 4	Encoder status bit 28	
	Bit 5	Encoder status bit 29	
	Bit 6	Encoder status bit 30	
	Bit 7	Encoder status bit 31	
0x2C4B:046	Motor encoder (HDSL): Encoder status, byte 4 • Read only		
	Bit 0	Encoder status bit 32	
	Bit 1	Encoder status bit 33	
	Bit 2	Encoder status bit 34	
	Bit 3	Encoder status bit 35	
	Bit 4	Encoder status bit 36	
	Bit 5	Encoder status bit 37	
	Bit 6	Encoder status bit 38	
	Bit 7	Encoder status bit 39	
0x2C4B:047	Motor encoder (HDSL): Encoder status, byte 5 • Read only		
	Bit 0	Encoder status bit 40	
	Bit 1	Encoder status bit 41	
	Bit 2	Encoder status bit 42	
	Bit 3	Encoder status bit 43	
	Bit 4	Encoder status bit 44	
	Bit 5	Encoder status bit 45	
	Bit 6	Encoder status bit 46	
	Bit 7	Encoder status bit 47	
0x2C4B:048	Motor encoder (HDSL): Encoder status, byte 6 • Read only		
	Bit 0	Encoder status bit 48	
	Bit 1	Encoder status bit 49	
	Bit 2	Encoder status bit 50	
	Bit 3	Encoder status bit 51	
	Bit 4	Encoder status bit 52	
	Bit 5	Encoder status bit 53	
	Bit 6	Encoder status bit 54	
	Bit 7	Encoder status bit 55	
0x2C4B:049	Motor encoder (HDSL): Encoder status, byte 7 • Read only		
	Bit 0	Encoder status bit 56	
	Bit 1	Encoder status bit 57	
	Bit 2	Encoder status bit 58	
	Bit 3	Encoder status bit 59	
	Bit 4	Encoder status bit 60	
	Bit 5	Encoder status bit 61	
	Bit 6	Encoder status bit 62	
	Bit 7	Encoder status bit 63	
0x2C4B:050	Motor encoder (HDSL): Fast position • Read only		

11.1.3.5 Evaluation of the signal quality

Signal quality

The signal quality is evaluated by the 0x2C42:004 parameter, which is used to monitor the initial read-out and setting of the position.

If a transmission error should occur:

- The current angular drift is marked as invalid in parameter 0x2833, bit 7
- The inverter maintains its operating status

Angular drift

Communication with the encoder is no longer monitored during angular drift determination.

The value displayed in 0x2C42:003 is determined in different ways depending on the type of encoder:

- **Determination of the current angular drift for the SinCos encoder**

  In the case of an incremental SinCos encoder, the pulses between two zero pulse events of the Z-track are counted. Assuming that there are no faults, this value corresponds to the set number of increments. The accuracy of this process corresponds to ± 1 increment graduation of the encoder, with the difference between the set number of increments and the counted pulses being converted to an angle with an accuracy of ±0.1°. The disadvantage is that an updated angular drift value only become available at the end of a complete encoder revolution. In turn, this means that the update rate depends on the speed.

- **Determination of the current angular drift for the SinCos Hiperface® absolute value encoder**

  In the case of a SinCos absolute value encoder with HIPERFACE® protocol, no Z-track is available; instead, the position is regularly read out of the encoder. When the first encoder read-out operation is performed (after power-up or elimination of wire breakage), the encoder position is used to initialise the internal device counter unit and to set an internal device position. All other read-out processes from the encoder are used to generate a difference between the internal device position and the encoder position. Assuming that there are no faults, the difference is zero. However, the dead time of the communication with the encoder means that the accuracy of the process is dependent on the speed and therefore restricted compared to the zero pulse process. However, the advantage is that the update rate does not depend on the speed, but is instead only determined by the communication rate. The update rate is encoder-specific and is generally in the range between 30 ... 50 ms.

Parameter

Address	Name / setting range / [default setting]	Information
0x2C42:003	Encoder settings: Angle drift • Read only: x.x °	Display of the angular drift of the current angle error. This indicates whether too many or two few pulses have been detected by the internal device counter unit for EMC-related reasons.
0x2C42:004	Encoder settings: Actual amplitude signal quality • Read only: x %	The signal quality indicates the actual amplitude of the SinCos analog signals with regard to 1 Vss = 100 %. • The signal quality should be between 95 ... 105 %. • There is no need for optimisation if the signal quality is within the tolerance zone for the analog encoder signals given in the data sheet of the encoder manufacturer.

11.1.4 Detection of changed settings of the feedback system

Bit 0 of status word 2 indicates whether the settings of the feedback system have been changed since leaving the **Not ready to start** state. If a change has been made, bit 0 is set to value "1". ▸ 0x2833

During the transition to the **Operation enabled** state, bit 0 is reset to value "0".

In all device states, changes to the following parameters continue to be monitored.

Relevant parameters of other functions

Address	Name	Default setting	Setting range
0x2C40	Motor encoder type	**SinCos encoder [1]**	Selection list
0x2C41:002	Motor encoder settings (HIPERFACE®): Type code manual input	**0**	0 ... 255
0x2C41:003	Motor encoder settings (HIPERFACE®): Manual input - Number of detectable motor encoder revolutions	**1**	1 ... 65535
0x2C41:005	Motor encoder settings (HIPERFACE®): Serial number	- (Read only)	
0x2C42:001	Encoder settings: Increments/revolution	**1024**	1 ... 262143
0x608F:001	Position encoder resolution: Encoder increments	**16 bit [65536]**	Selection list
0x608F:002	Position encoder resolution: Motor revolutions	**1**	1 ... 1

11.1.5 Diagnostics

Parameter

Address	Name / setting range / [default setting]		Information
0x2C4F	Parameter CRC of motor encoder • Read only		Display of the cyclic redundancy check (CRC) of selected encoder parameters to detect changes in the feedback settings.
0x2DDF:005	Axis information: Detected module in slot A • Read only		Display of supported feedback system for the motor.
	0	Product defined	
	1	No module	
	2	Resolver	
	3	SinCos/HIPERFACE®/SSI	
	4	SinCos/HIPERFACE®/SSI/TTL	

11.2 Second feedback system for the techology application

The parameter settings for the feedback system of the application are accessed in »EASY starter« via the following path:

- **Settings** tab
  - Basic setting \ Feedback application (B)

Here, you have the choice of using the following feedback systems:

- Resolver
- Encoder

You can select the feedback system that you wish to use by pressing the correspondingly named button.

11.2.1 General settings

This chapter provides information on general feedback system settings for the application.

Parameter

Address	Name / setting range / [default setting]		Information
0x2C55	Load encoder/master encoder error response		Selection of the response to the triggering of the encoder signal loss monitoring. Only active when used as: • Feedback system for motor control if set, • Signal source for the "position counter" function. Associated event ID: • 537490180 | 0x20097304 - Error - Load encoder/master encoder
	0	No response	▸ Severity 574
	1	**Fault > CiA402**	
	2	Warning	
0x2C56	Number of the absolute ascertainable revolutions of load encoder/master encoder • Read only		Is set by the firmware according to the available version: • 0: no absolute value encoder (sin/cos encoder) or resolver with number of pole pairs > 1 • 1: Hiperface encoder SingleTurn or resolver with number of pole pairs = 1 • > 1: Hiperface encoder Multi Turn
0x2C57	Open circuit detection sensitivity of load encoder/ master encoder 1 ... [**100**] ... 100 %		The sensitivity can be reduced by percentage, e. g. in case of EMC interferences.
0x60E6:001	Additional position encoder resolution - encoder increments: Load encoder/master encoder - number of increments • Setting can only be changed if the inverter is disabled.		Setting the number of bits to be used for resolving a mechanical revolution of the secondary feedback system.
	65536	**16 Bit**	
	262144	18 Bit	
	1048576	20 Bit	
	4194304	22 Bit	
	16777216	24 Bit	
	67108864	26 Bit	
	268435456	28 Bit	
	1073741824	30 Bit	
0x60EB:001	Additional position encoder resolution - motor revolutions: Load encoder/master encoder - resolution of motor revolutions 1 ... [**1**] ... 1 • Setting can only be changed if the inverter is disabled.		Setting of the number of revolutions of the secondary feedback system. Only setting "1" is accepted.

11.2.2 Resolver settings

Resolvers with a number of pole pairs > 1 are not absolute value encoders.

Bit 10 in 0x2833 (Lenze status word 2) therefore remains set to "0".

The "distinguishable revolutions" specification in 0x2C56 is also set to "0".

Parameter

Address	Name / setting range / [default setting]		Information
0x2822:029	Axis commands: Get load encoder/master encoder characteristic (resolver)		Definition of the resolver characteristic for application feedback.
	0	**Off/Ready**	
	1	On/Start	
	2	In progress	
	3	Action cancelled	
	4	No access	
	5	No access (Device disabled)	
0x2C53	Load encoder/master encoder resolver number of pole pairs 1 ... [**1**] ... 1 • Setting can only be changed if the inverter is disabled.		Setting of the number of pole pairs.

11.2.2.1 Resolver error compensation

The actual position detected by the resolver is not exactly the same as the real physical position. There are always more or less substantial deviations.

An identification run of the resolver automatically determines the adjustment values required to compensate for the resolver error.

The determined values have a corrective effect on the cause of occurrence in the following parameters:

Cause	Remedy
Sine and cosine track do not magnetize orthogonally to each other.	0x2C44:001 Correction of the angle by means of which the two resolver tracks are supplied in a manner relative to one another.
The inductances of the sine and cosine track of the resolver have slightly different values.	0x2C44:002 and 0x2C44:003 Adjusting the gains of the digital-analog converters which feed the resolver tracks.

Conditions for executing the identification run

- Motor
  - If possible, execute the identification run before the motor is installed in the machine. Bigger load changes at the motor may have a negative impact on the identification result.
  - The motor and resolver must be properly connected to the inverter.
  - The motor must rotate freely.
- Inverter
  - The inverter must be supplied with mains voltage. Check: 0x6041, bit 4 = TRUE.
  - The control electronics must be supplied with voltage. For some designs, an external voltage source is required for this purpose.
  - The inverter must be connected "online" to the Engineering Tool.
- Correct parameterization:
  - Number of resolver pole pairs (0x2C43)
  - Motor speed-controlled or position-controlled in servo control mode

How to run an identification

1. Initiate identification run with parameter 0x2822:025.
2. Enable inverter.
   The identification run is in standby mode.
3. Approach a constant speed between n = 500 rpm and n = 3000 rpm.
   The identification run is started automatically after the drive has reached a constant speed and maintained this speed for the time defined in .

   This speed is saved for the identification run. In order that the identification run can be continued again, e.g. after an interruption, the drive must be operated again with this speed.

   End of identification run

   After the resolver error identification has been executed successfully, the parameters 0x2C44:001 ... 0x2C44:003 are written automatically. The resolver now works with these settings.

   Brief interruption of the identification run

   A short-time interruption, e.g. by removing the controller enable, does not stop the measurement. It is continued after the controller is enabled anew. For the duration of the interruption, the following status message is displayed: "Identification interrupted temporarily".

   Cancelling the identification run

   The measurement is canceled in case the inverter disable lasts longer or after the timeout time has elapsed. A timeout error is displayed for the identification run, see error messages in the logbook.
4. If the measurement was successful, the motor can be stopped
5. After the process has been completed, save the changed parameters 0x2C44:001 ... 0x2C44:003 in the inverter.

The »EASY Starter« serves to save the parameter setting of the inverter, see ▸ Saving the parameter settings. 📖 39

Possible responses during the execution

- Motor running may appear somewhat uneven during identification.
- The direction of rotation can change.

  This has no negative impact on the quality of the identification. In this case, the inverter automatically interrupts the identification run and automatically continues it if a constant speed is reached again.
- If the motor already installed in the machine does not have sufficient range in one direction for executing the identification run, you can also reverse the driving direction while the identification is active. In this case, the identification automatically switches to the "Identification temporarily interrupted ". The status is deactivated as soon as a constant speed has been reached again.

In the event of an interruption, the identification run is stopped. An error message is displayed.

If 0 % is set, the gain of the respective resolver track is only 95 % of the Lenze setting.

The detected gain can assume values in the range of 0 ... 100 %.

In case of a successful resolver error compensation, only one of the two gains is adjusted. The other value remains at 100 %.

Deactivating the resolver error compensation

For deactivating the resolver error compensation, the respective parameters must be reset again to the Lenze setting.

Parameter

Address	Name / setting range / [default setting]		Information
0x2C54:001	Load encoder/master encoder identification (Resolver): Angle -100 ... [**0**] ... 100		Setting of the angle to the resolver error compensation.
0x2C54:002	Load encoder/master encoder identification (Resolver): Cosine track gain 0 ... [**100**] ... 100 %		Setting of the gain of the cosine track to the resolver error compensation.
0x2C54:003	Load encoder/master encoder identification (Resolver): Sine track gain 0 ... [**100**] ... 100 %		Setting of the gain of the sine track to the resolver error compensation.
0x2C54:006	Load encoder/master encoder identification (Resolver): Identification status • Read only		Display of the resolver identification status.
	Bit 0	Identification activated	TRUE if: • Identification has been started. • Controller enable is active. FALSE if: • Identification has been aborted or completed successfully. • A timeout error is active. • The 24V supply has been switched on and default settings are loaded.
	Bit 2	Identification is running	TRUE if: • Identification is running. FALSE if: • The motor speed has fallen below the minimum speed of 500 rpm. • The identification process has been aborted temporarily and is on standby.
	Bit 3	Identification successful	TRUE if: • Identification has been completed successfully. FALSE if: • The identification is not completed yet after default settings were loaded.
	Bit 4	Identification failed	TRUE if: • A timeout error has occurred. FALSE if: • Identification has been completed successfully.
0x2C54:008	Load encoder/master encoder identification (Resolver): Cosine track offset -100.000 ... [**0.000**] ... 100.000 %		
0x2C54:009	Load encoder/master encoder identification (Resolver): Sine track offset -100.000 ... [**0.000**] ... 100.000 %		

11.2.3 Encoder settings

In general, an encoder is a measuring system which serves to detect the velocity/speed and possibly the position of a kinematics or motor.

Details

If a resolver variant is to be plugged into the respective slot of the inverter as a feedback system, the parameters in this section have no function.

Generally, an encoder can be used for a variety of tasks:
- As setpoint encoder for defining a speed / frequency setpoint.
- As setpoint encoder for defining a position setpoint.
- As setpoint encoder for defining a setpoint for the process controller.
- As actual value encoder for feeding back the variable for the process controller.
- As kinematics encoder (feedback system).

Parameter

Address	Name / setting range / [default setting]	Information
0x2C50	Load encoder/master encoder type • Setting can only be changed if the inverter is disabled. **1** **SinCos encoder** 2 HIPERFACE® SinCos absolute value encoder 3 TTL encoder 5 SSI absolute value encoder 6 SSI SinCos absolute value encoder	Selection of the encoder type.
0x2C52:001	Load encoder/master encoder settings (encoder): Increments/revolution 1 ... [**1024**] ... 262143 • Setting can only be changed if the inverter is disabled.	Setting of the encoder number of increments (according to manufacturer data/encoder data sheet).
0x2C52:002	Load encoder/master encoder settings (encoder): Supply voltage 5.0 ... [**5.0**] ... 12.0 V • Setting can only be changed if the inverter is disabled.	Setting of the supply voltage.

11.2.3.1 SinCos encoder

The following SinCos encoder types without HIPERFACE® protocol are supported by the inverter:

Type	Increments/revolution	Absolute revolutions
IG1024-5V-V3 (RVS58S)	1024	0
IG2048-5V-S (ITD22)	2048	0
IG2048-5V-S	2048	0

11.2.3.2 SinCos absolute value encoder with HIPERFACE® protocol

The following SinCos encoder types with HIPERFACE® protocol are supported by the inverter:

Type	Increments/revolution	Absolute revolutions	Type code 0x2C41:001
AM1024-8V-H (SRM50)	1024	4096 (Multiturn)	39
AM1024-8V-H (SFM60)	1024		39
AM1024-8V-K2 (SRM50S)	1024		39
AM128-8V-H (SKM36)	128		55
AM16-8V-H (SEL37)	16		71
AM16-8V-H (SEL52)	16		71
AM512-8V-H (SCM70)	512		7
AS1024-8V-H (SRS50)	1024	4096 (Single-turn)	34
AS1024-8V-K2 (SRS50S)	1024		34
AS16-8V-H (SEK37)	16		66
AS16-8V-H (SEK52)	16		66
AS512-8V-H (SCS70)	512		2

Use of non-supported encoder types

If the type code of the encoder used is not listed in the table of supported encoder types, this encoder can be introduced to the inverter via two parameters. ▸ 0x2C51:002 ▸ 0x2C51:003

In this context, please also observe the information provided in the parameter description 0x2C41:008.

Parameter

Address	Name / setting range / [default setting]	Information
0x2822:030	Axis commands: Get load encoder/master encoder information (HIPERFACE®) **0 Off/Ready** 1 On/Start 2 In progress 3 Action cancelled 4 No access 5 No access (controller inhibit)	Obtain Hiperface information from the encoder for application feedback.
0x2C51:001	Load encoder/master encoder settings (HIPERFACE®): Type code detected • Read only	Type code read out of the encoder. This value is "0" if ... • a sin/cos encoder is set (0x2C50 = 2); • a communication error has occurred.
0x2C51:002	Load encoder/master encoder settings (HIPERFACE®): Type code manual input 0 ... [**0**] ... 255 • Setting can only be changed if the inverter is disabled.	Manual setting of the encoder type code (display in 0x2C51:001).
0x2C51:003	Load encoder/master encoder settings (HIPERFACE®): Manual input - Number of detectable load/master encoder revolutions 1 ... [**1**] ... 65535 • Setting can only be changed if the inverter is disabled.	Manual setting of the number of distinguishable revolutions.

Address	Name / setting range / [default setting]		Information
0x2C51:004	Load encoder/master encoder settings (HIPERFACE®): Error response		Selection of the response for communication errors or in the event of an unknown encoder. Associated event IDs: • 537490306 | 0x20097382 - Load encoder/master encoder - Communication error • 537490307 | 0x20097383 - Load encoder/master encoder - wrong absolute value because motor speed is too high • 537526042 | 0x2009FF1A - Connected HIPERFACE® load encoder/ master encoder is not supported
	0	No response	▸ Severity 📖 574
	1	**Fault > CiA402**	
	2	Warning	
0x2C51:005	Load encoder/master encoder settings (HIPERFACE®): Serial number • Read only		The displayed serial number can be used for identifying an encoder change.
0x2C51:006	Load encoder/master encoder settings (HIPERFACE®): Actual position (raw data) • Read only		The encoder-internal position value is output without being converted.
0x2C51:007	Load encoder/master encoder settings (HIPERFACE®): No. of periods detected • Read only		Display of the encoder increment according to encoder nameplate or type code.
0x2C51:008	Load encoder/master encoder settings (HIPERFACE®): Type code verification • Read only		If an encoder is connected that is not supported by the firmware, it will be displayed here. In this case, the same response takes place as in case of a communication error. The error can be removed by manually setting the type code in 0x2C51:002. This serves to signalise to the firmware that the number of distinguishable revolutions is as well set correctly in 0x2C51:003 by the user.
	0	Unknown - manual data input	In this case, the same response takes place as in case of a communication error. The error can be removed by manually setting the type code in 0x2C51:002. This serves to signalise to the firmware that the number of distinguishable revolutions is as well set correctly in 0x2C51:003 by the user.
	1	Known - parameterisation ok	
0x2C51:009	Load encoder/master encoder settings (HIPERFACE®): Encoder type • Read only		Display of the detected encoder type (rotary/linear).
	0	Rotative encoder	
	1	Linear encoder	
0x2C51:010	Load encoder/master encoder settings (HIPERFACE®): No. of periods linear encoder • Read only: x nm		Display of the period length of the linear encoder.

11.2.3.3 SSI encoder

SSI absolute value encoder (**S**ynchronous **S**erial **I**nterface) generate the angle information by optically scanning a code disc (e.g. as Gray Code). Each (absolute) angular position of the encoder corresponds to a code pattern that can be uniquely assigned.

All encoders that use the Stegmann SSI protocol are supported:

- Supported bit rates for SSI communication: 150 ... 1000 kbits
- Supported data word widths: 1 ... 31 bits (effective)
- Supported output code of the SSI encoder: Gray or Binary
- Cycle time: 62.5 µs, 125 µs and 250 µs .
- Encoder supply: U < 12 V, I ≤ 0.25 A

How to parameterise the SSI encoder:

1. Set the supply voltage of the SSI encoder used in 0x2C52:002.
2. Set selection "5: SSI encoder" as the encoder type in 0x2C50.
3. Set the transmission rate for SSI communication in 0x2C5A:001.
   With the SSI protocol, the permissible transmission rate decreases as the cable lengths increase. A safe transmission rate must be set according to the length of the encoder cable used and the electromagnetic interference level.
4. Set the telegram length in 0x2C5A:002.
   The telegram length reflects the number of data bits used for transmission of a complete SSI data packet.
5. Break the received SSI data word down into partwords and, if necessary, activate data conversion of Gray into binary code.

Parameter

Address	Name / setting range / [default setting]	Information
0x2C5A:001	Load encoder/master encoder (SSI) protocol parameters: Bit rate 150 ... [**300**] ... 1000 kbps • Setting can only be changed if the inverter is disabled.	To enable a stable transmission rate, the length of the encoder cable used and any electromagnetic interference levels must be taken into account when setting the value.
0x2C5A:002	Load encoder/master encoder (SSI) protocol parameters: Telegram length 1 ... [**25**] ... 31 • Setting can only be changed if the inverter is disabled.	The set value specifies the number of data bits which are transmitted as a complete SSI data packet.
0x2C5A:003	Load encoder/master encoder (SSI) protocol parameters: Bits/revolution 1 ... [**13**] ... 31 • Setting can only be changed if the inverter is disabled.	Resolution of the encoder. For example, the resolution for the preset value is "13": 2^{13} = 8196 (bits/revolution).
0x2C5A:004	Load encoder/master encoder (SSI) protocol parameters: Position data start bit 0 ... [**0**] ... 30 • Setting can only be changed if the inverter is disabled.	Indicates the position in the telegram where the position data word begins.
0x2C5A:005	Load encoder/master encoder (SSI) protocol parameters: Data package 1 start bit 0 ... [**0**] ... 30 • Setting can only be changed if the inverter is disabled.	Indicates the position in the telegram where data packet 1 begins.
0x2C5A:006	Load encoder/master encoder (SSI) protocol parameters: Data package 2 start bit 0 ... [**0**] ... 30 • Setting can only be changed if the inverter is disabled.	Indicates the position in the telegram where data packet 2 begins.

Address	Name / setting range / [default setting]	Information
0x2C5A:007	Load encoder/master encoder (SSI) protocol parameters: Data package 3 start bit 0 ... [**0**] ... 30 • Setting can only be changed if the inverter is disabled.	Indicates the position in the telegram where data packet 3 begins.
0x2C5A:008	Load encoder/master encoder (SSI) protocol parameters: Position data length 0 ... [**25**] ... 30 • Setting can only be changed if the inverter is disabled.	SSI position data length
0x2C5A:009	Load encoder/master encoder (SSI) protocol parameters: Data package 1 length 0 ... [**0**] ... 30 • Setting can only be changed if the inverter is disabled.	Length of data packet 1.
0x2C5A:010	Load encoder/master encoder (SSI) protocol parameters: Data package 2 length 0 ... [**0**] ... 30 • Setting can only be changed if the inverter is disabled.	Length of data packet 2.
0x2C5A:011	Load encoder/master encoder (SSI) protocol parameters: Data package 3 length 0 ... [**0**] ... 30 • Setting can only be changed if the inverter is disabled.	Length of data packet 3.
0x2C5A:012	Load encoder/master encoder (SSI) protocol parameters: Position data coding • Setting can only be changed if the inverter is disabled. **0** **Binary** 1 Gray	Coding of position data word (read only). If a value of "0" is set for the position data length in 0x2C4A:008, then the value displayed for this parameter is also "0".
0x2C5A:013	Load encoder/master encoder (SSI) protocol parameters: Data package 1 coding • Setting can only be changed if the inverter is disabled. **0** **Binary** 1 Gray	Coding of data packet 1
0x2C5A:014	Load encoder/master encoder (SSI) protocol parameters: Data package 2 coding • Setting can only be changed if the inverter is disabled. **0** **Binary** 1 Gray	Coding of data packet 2
0x2C5A:015	Load encoder/master encoder (SSI) protocol parameters: Data package 3 coding • Setting can only be changed if the inverter is disabled. **0** **Binary** 1 Gray	Coding of data packet 3
0x2C5A:016	Load encoder/master encoder (SSI) protocol parameters: Position raw data • Read only	Raw value of position data word (read only). If a value of "0" is set for the position data length in 0x2C4A:008 , then the value displayed for this parameter is also "0".
0x2C5A:017	Load encoder/master encoder (SSI) protocol parameters: Data package 1 raw data • Read only	Raw value of data packet 1 (read only). If a value of "0" is set for the data packet length 1 in 0x2C4A:013 , then the value displayed for this parameter is also "0".
0x2C5A:018	Load encoder/master encoder (SSI) protocol parameters: Data package 2 raw data • Read only	Raw value of data packet 2 (read only). If a value of "0" is set for the data packet length 2 in 0x2C4A:014 , then the value displayed for this parameter is also "0".
0x2C5A:019	Load encoder/master encoder (SSI) protocol parameters: Data package 3 raw data • Read only	Raw value of data packet 3 (read only). If a value of "0" is set for the data packet length 3 in 0x2C4A:015 , then the value displayed for this parameter is also "0".

Address	Name / setting range / [default setting]	Information
0x2C5A:020	Load encoder/master encoder (SSI) protocol parameters: Encoder type • Setting can only be changed if the inverter is disabled.	
	0 **Rotative encoder**	
	1 Linear encoder	
0x2C5A:021	Load encoder/master encoder (SSI) protocol parameters: Position raw data scaled by 0x608F • Read only: x inc	
0x2C5A:022	Load encoder/master encoder (SSI) protocol parameters: Monoflop time 0 ... [**0**] ... 500 µs • Setting can only be changed if the inverter is disabled.	
0x2C5A:023	Load encoder/master encoder (SSI) protocol parameters: Resulting SSI-telegram cycle time • Read only: x.x µs	

11.2.3.4 Evaluation of the signal quality

Signal quality

The signal quality is evaluated by the parameter 0x2C52:004, which serves to monitor the initial reading and setting of the position.

If a transmission error occurs

- the current angular drift is marked as invalid in the parameter 0x2833, bit 9.
- the inverter keeps its operating status.

Angular drift

Communication with the encoder is no longer monitored during the angular drift determination.

The value displayed in 0x2C52:003 is determined in different ways depending on the encoder type:

- **Determination of the current angular drift for the sin/cos encoder**

  In the case of an incremental SinCos encoder, the pulses between two zero pulse events of the Z-track are counted. Assuming that there are no faults, this value corresponds to the set number of increments. The accuracy of this process corresponds to ± 1 increment graduation of the encoder, with the difference between the set number of increments and the counted pulses being converted to an angle with an accuracy of ±0.1°. The disadvantage is that an updated angular drift value only becomes available at the end of a complete encoder revolution. In turn, this means that the update rate depends on the speed.

- **Determination of the current angular drift for the SinCos-Hiperface® absolute value encoder**

  In the case of a SinCos absolute value encoder with HIPERFACE® protocol, no Z-track is available; instead, the position is regularly read out of the encoder. When the first encoder read-out operation is performed (after power-up or elimination of wire breakage), the encoder position is used to initialise the internal device counter unit and to set an internal device position. All other read-out processes from the encoder are used to generate a difference between the internal device position and the encoder position. Assuming that there are no faults, the difference is zero. However, the dead time of the communication with the encoder means that the accuracy of the process is dependent on the speed and therefore restricted compared to the zero pulse process. However, the advantage is that the update rate does not depend on the speed, but is instead only determined by the communication rate. The update rate is encoder-specific and is generally in the range between 30 ... 50 ms.

Parameter

Address	Name / setting range / [default setting]	Information
0x2C52:003	Load encoder/master encoder settings (encoder): Angle drift • Read only: x.x °	Display of the angular drift of the current angle error.
0x2C52:004	Load encoder/master encoder settings (encoder): Actual amplitude signal quality • Read only: x %	The signal quality indicates the actual amplitude of the SinCos analog signals with regard to 1 Vss = 100 %. • The signal quality should be between 95 ... 105 %. • There is no need for optimisation if the signal quality is within the tolerance zone for the analog encoder signals given in the data sheet of the encoder manufacturer.

11.2.4 Detection of changed settings of the feedback system

Bit 8 of status word 2 is used to indicate whether a change has been made to the settings of the feedback system since the **Not ready to switch on** state was exited. When a change is made, bit 0 is set to the value "1". ▸ 0x2833

When switching to the **Operation enabled** state, bit 8 is reset to the value "0".

In all device states, monitoring of changes to the following parameters remains active.

Relevant parameters of other functions

Address	Name	Default setting	Setting range
0x2C50	Load encoder/master encoder type	**SinCos encoder [1]**	Selection list
0x2C51:002	Load encoder/master encoder settings (HIPERFACE®): Type code manual input	**0**	0 ... 255
0x2C51:003	Load encoder/master encoder settings (HIPERFACE®): Manual input - Number of detectable load/master encoder revolutions	**1**	1 ... 65535
0x2C51:005	Load encoder/master encoder settings (HIPERFACE®): Serial number	- (Read only)	
0x2C52:001	Load encoder/master encoder settings (encoder): Increments/revolution	**1024**	1 ... 262143
0x608F:001	Position encoder resolution: Encoder increments	**16 bit [65536]**	Selection list
0x608F:002	Position encoder resolution: Motor revolutions	**1**	1 ... 1

11.2.5 Diagnostics

Parameter

Address	Name / setting range / [default setting]	Information
0x2C56	Number of the absolute ascertainable revolutions of load encoder/master encoder • Read only	Is set by the firmware according to the available version: • 0: no absolute value encoder (sin/cos encoder) or resolver with number of pole pairs > 1 • 1: Hiperface encoder SingleTurn or resolver with number of pole pairs = 1 • > 1: Hiperface encoder Multi Turn
0x2C5F	Parameter CRC of load encoder/master encoder • Read only	Display of the cyclic redundancy check (CRC) of selected encoder parameters to detect changes in the feedback settings.
0x2DDF:006	Axis information: Detected module in slot B • Read only 0 Product defined 1 No module 2 Resolver 3 SinCos/HIPERFACE®/SSI 4 SinCos/HIPERFACE®/SSI/TTL	Display of the supported feedback system for the application. Cannot be used as motor feedback.
0x60E4:001	Additional position actual value: Load encoder/master encoder - actual position • Read only: x inc	Display of the actual position of the secondary feedback system.
0x60E5:001	Additional velocity actual value: Load encoder/master encoder - actual speed • Read only: rpm	Display of the actual velocity of the secondary feedback system.

11.3 Encoder: Evaluation of safely speed and position

11.3.1 Parameter setting of the feedback system

The standardization for functional safety requires separate parameterization of the connected encoder system for the safety module.

Note the parameter settings required for this.

The plausibility check rejects ambiguous settings until they are correctly parameterized.

Parameter setting of the motor encoder

Standard device "Base Drive"				Safety module "Safe Drive"	
Encoder system		**Parameter**	**Setting**	**Parameter**	**Setting**
Resolver at X7	Selection	automatic recognition		0x2878:001	2 = resolver
	Number of pole pairs	0x2C43	encoder-dependent	0x2878:003	0x2878:003 = 0x2C43
Encoder at X8	Selection	0x2C40	1 = SinCos encoder	0x2878:001	1 = SinCos encoder
		0x2C40	2 = HIPERFACE® SinCos absolute value encoder		
		0x2C40	6 = SSI SinCos absolute value encoder		
	Number of increments	0x2C42:001	encoder-dependent	0x2878:002	0x2878:002 = 0x2C42:001
HIPERFACE DSL® (OCT) at X109	Selection	0x2DE1:001	10 = HIPERFACE DSL® (OCT)	0x2878:001	3 = HIPERFACE DSL® (OCT)

Scaling of the encoder values

All encoder values are managed in the safety module as 32-bit values. The lower 16 bits contain the part of one motor revolution and the higher 16 bits contain the multiple of one motor revolution.

Examples

Encoder value	Calculation	Result (hex)
¼ motor revolution	65536/4 = 16384	0x0000'4000
½ motor revolution	65536/2 = 32768	0x0000'8000
1 motor revolution	1 * 65536 = 65536	0x0001'0000
2 motor revolutions	2 * 65536 = 131072	0x0002'0000
2½ motor revolutions	2 * 65536 + 65536/2 = 163840	0x0002'8000

Parameter

Address	Name / setting range / [default setting]		Information
0x2878:001	Motor encoder (ES): System • Read only		Changes only possible in the +Safety parameter list+.
	0	No motor encoder	
	1	SinCos encoder	
	2	Resolver	
	3	HIPERFACE DSL® (OCT)	
0x2878:002	Motor encoder (ES): SinCos encoder PPR • Read only		Changes only possible in the +Safety parameter list+.
0x2878:003	Motor encoder (ES): Number of resolver pole pairs • Read only		

Address	Name / setting range / [default setting]		Information
0x2878:050	Motor encoder (ES): HDSL driver state • Read only		
	Bit 0	State - bit 0	
	Bit 1	State - bit 1	
	Bit 2	State - bit 2	
	Bit 3	State - bit 3	
	Bit 4	Encoder error	
	Bit 5	Encoder warning	
	Bit 6	"Stuck-at" error	
	Bit 7	Position CRC error	
	Bit 8	Communication error	
	Bit 9	Encoder type not supported	
	Bit 10	Diagnostic error	
	Bit 11	Self-test missing	
	Bit 12	Supply voltage error	
	Bit 13	Different encoder ID	
	Bit 14	Status bit 14 (reserved)	
	Bit 15	Status bit 15 (reserved)	
0x2878:051	Motor encoder (ES): HDSL online status 1 • Read only		
	Bit 0	FRES	
	Bit 1	FIX0	
	Bit 2	QMLW	
	Bit 3	FIX0	
	Bit 4	FIX0	
	Bit 5	MIN	
	Bit 6	POSTX0	
	Bit 7	POSTX1	
	Bit 8	PRST	
	Bit 9	FIX0	
	Bit 10	VPOS	
	Bit 11	FIX0	
	Bit 12	FIX1	
	Bit 13	SCE	
	Bit 14	SSUM	
	Bit 15	SINT	
0x2878:052	Motor encoder (ES): HDSL online status 2 • Read only		
	Bit 0	FIX0	
	Bit 1	FIX0	
	Bit 2	QMLW	
	Bit 3	FIX0	
	Bit 4	FIX0	
	Bit 5	FIX0	
	Bit 6	POSTX0	
	Bit 7	POSTX1	
	Bit 8	PRST	
	Bit 9	FIX0	
	Bit 10	VPOS2	
	Bit 11	FIX0	
	Bit 12	FIX1	
	Bit 13	SCE2	
	Bit 14	SUM2	
	Bit 15	FIX0	

Address	Name / setting range / [default setting]		Information
0x2878:053	Motor encoder (ES): HDSL Safe summary • Read only		
	Bit 0	SSUM0	
	Bit 1	SSUM1	
	Bit 2	SSUM2	
	Bit 3	SSUM3	
	Bit 4	SSUM4	
	Bit 5	SSUM5	
	Bit 6	SSUM6	
	Bit 7	SSUM7	
0x2878:054	Motor encoder (ES): HDSL Safe Channel 2 status • Read only		
	Bit 0	FIX2	
	Bit 1	FIX2	
	Bit 2	FIX2	
	Bit 3	FIX2	
	Bit 4	FIX2	
	Bit 5	ERR2	
	Bit 6	TEST2	
	Bit 7	TOG2	
0x2878:055	Motor encoder (ES): HDSL encoder status ENC_ST0 (ES) • Read only		
	Bit 0	Encoder status bit 0	
	Bit 1	Encoder status bit 1	
	Bit 2	Encoder status bit 2	
	Bit 3	Encoder status bit 3	
	Bit 4	Encoder status bit 4	
	Bit 5	Encoder status bit 5	
	Bit 6	Encoder status bit 6	
	Bit 7	Encoder status bit 7	
0x2878:056	Motor encoder (ES): HDSL encoder status ENC_ST1 (ES) • Read only		
	Bit 0	Encoder status bit 8	
	Bit 1	Encoder status bit 9	
	Bit 2	Encoder status bit 10	
	Bit 3	Encoder status bit 11	
	Bit 4	Encoder status bit 12	
	Bit 5	Encoder status bit 13	
	Bit 6	Encoder status bit 14	
	Bit 7	Encoder status bit 15	
0x2878:057	Motor encoder (ES): HDSL encoder status ENC_ST2 (ES) • Read only		
	Bit 0	Encoder status bit 16	
	Bit 1	Encoder status bit 17	
	Bit 2	Encoder status bit 18	
	Bit 3	Encoder status bit 19	
	Bit 4	Encoder status bit 20	
	Bit 5	Encoder status bit 21	
	Bit 6	Encoder status bit 22	
	Bit 7	Encoder status bit 23	

Address	Name / setting range / [default setting]		Information
0x2878:058	Motor encoder (ES): HDSL encoder status ENC_ST3 (ES) • Read only		
	Bit 0	Encoder status bit 24	
	Bit 1	Encoder status bit 25	
	Bit 2	Encoder status bit 26	
	Bit 3	Encoder status bit 27	
	Bit 4	Encoder status bit 28	
	Bit 5	Encoder status bit 29	
	Bit 6	Encoder status bit 30	
	Bit 7	Encoder status bit 31	
0x2878:059	Motor encoder (ES): HDSL encoder status ENC_ST4 (ES) • Read only		
	Bit 0	Encoder status bit 32	
	Bit 1	Encoder status bit 33	
	Bit 2	Encoder status bit 34	
	Bit 3	Encoder status bit 35	
	Bit 4	Encoder status bit 36	
	Bit 5	Encoder status bit 37	
	Bit 6	Encoder status bit 38	
	Bit 7	Encoder status bit 39	
0x2878:060	Motor encoder (ES): HDSL encoder status ENC_ST5 (ES) • Read only		
	Bit 0	Encoder status bit 40	
	Bit 1	Encoder status bit 41	
	Bit 2	Encoder status bit 42	
	Bit 3	Encoder status bit 43	
	Bit 4	Encoder status bit 44	
	Bit 5	Encoder status bit 45	
	Bit 6	Encoder status bit 46	
	Bit 7	Encoder status bit 47	
0x2878:061	Motor encoder (ES): HDSL encoder status ENC_ST6 (ES) • Read only		
	Bit 0	Encoder status bit 48	
	Bit 1	Encoder status bit 49	
	Bit 2	Encoder status bit 50	
	Bit 3	Encoder status bit 51	
	Bit 4	Encoder status bit 52	
	Bit 5	Encoder status bit 53	
	Bit 6	Encoder status bit 54	
	Bit 7	Encoder status bit 55	
0x2878:062	Motor encoder (ES): HDSL encoder status ENC_ST7 (ES) • Read only		
	Bit 0	Encoder status bit 56	
	Bit 1	Encoder status bit 57	
	Bit 2	Encoder status bit 58	
	Bit 3	Encoder status bit 59	
	Bit 4	Encoder status bit 60	
	Bit 5	Encoder status bit 61	
	Bit 6	Encoder status bit 62	
	Bit 7	Encoder status bit 63	

Address	Name / setting range / [default setting]	Information
0x2879:001	Mechanical data: Motor mounting direction • Read only	
	0 Motor rotating CW	
	1 Motor rotating CCW	
0x287A:001	Load encoder (ES): System • Read only	
	0 No load encoder	
	1 Analog (SinCos/TTL)	
	2 Digital (SSI/bus)	
0x287A:003	Load encoder (ES): Gear numerator • Read only	
0x287A:004	Load encoder (ES): Gear denominator • Read only	
0x287A:005	Load encoder (ES): Mounting direction • Read only	
	0 As motor encoder	
	1 Inverted to motor encoder	
0x287A:006	Load encoder (ES): Position -2147483648 ... [**0**] ... 2147483647 incr.	
0x287A:007	Load encoder (ES): Position status	
	0 Invalid	
	1 Valid	
0x287A:008	Load encoder (ES): Additional gear numerator • Read only	
0x287A:009	Load encoder (ES): Additional gear denominator • Read only	
0x287B:001	Speed: Tolerance window (n=0) • Read only: x rpm	If the speed is within the tolerance window, the status "n = 0 rpm" is valid. Changes only possible in the +Safety parameter list+.
0x287B:002	Speed: Tolerance speed comparison • Read only: x rpm	Changes only possible in the +Safety parameter list+.
0x287B:003	Speed: Current speed n_safe • Read only: x rpm	Ist-Drehzahl, ermittelt aus der Validierung von nBD und nSD. Geht in die weitere Verarbeitung der geschwindigkeitsabhängigen Sicherheitsfunktionen ein.
0x287B:004	Speed: Internal current speed nSD • Read only: x rpm	Drehzahlwert Safe-Drive, intern ermittelte Ist-Geschwindigkeit aus der Safety-Applikation
0x287B:005	Speed: Internal current speed nBD • Read only: x rpm	Drehzahlwert Base-Drive, intern ermittelte Ist-Geschwindigkeit aus der Standardapplikation
0x287B:006	Speed: Current speed difference nSD-nBD • Read only: x rpm	
0x287C:001	Position: Tolerance position comparison • Read only: x incr.	Changes only possible in the +Safety parameter list+.
0x287C:002	Position: Current position p_safe • Read only: x incr.	Ist-Position, ermittelt aus der Validierung von pBD und pSD. Geht in die weitere Verarbeitung der positionsabhängigen Sicherheitsfunktionen ein. 1-Geber-System: Der inkrementelle Positionswert hat Bezug zum Motorgeber. 2-Geber-System: Der inkrementelle Positionswert hat Bezug zum Lastgeber.
0x287C:003	Position: Internal current position pSD • Read only: x incr.	Positionswert Safe-Drive, intern ermittelte Ist-Position aus der Safety-Applikation 1-Geber-System: Der inkrementelle Positionswert hat Bezug zum Motorgeber. 2-Geber-System: Die eingestellten Getriebefaktoren werden bei der Berechnung der Positionswerte berücksichtigt.
0x287C:004	Position: Internal current position pBD • Read only: x incr.	Positionswert Base-Drive, intern ermittelte Ist-Position aus der Standard-Applikation 1-Geber-System: Der inkrementelle Positionswert hat Bezug zum Motorgeber. 2-Geber-System: Der inkrementelle Positionswert hat Bezug zum Lastgeber.

Address	Name / setting range / [default setting]	Information
0x287C:005	Position: Current position difference pSD-pBD • Read only: x incr.	

11.4 Synchronous motor: Pole position identification (PPI)

For controlling a permanent-magnet synchronous motor, the pole position - the angle between the motor phase U and the field axis of the rotor - must be known.

- For Lenze motors with absolute value encoder or resolver, the pole position has already been set correctly.
- When incremental encoders are used (TTL or sin/cos encoders without absolute position information), a pole position identification (PPI) is always required. This also applies to Lenze motors.

NOTICE

The pole position identification (PPI) must only be executed

► for servo control with a synchronous motor of an original equipment manufacturer.
► for servo control with a synchronous motor and incremental encoders (TTL or sin/cos encoder).
► after changes to the motor feedback system, e.g. feedback replacement.

The parameter settings for pole position identification are accessed in »EASY Starter« via the following path:

- **Settings** tab
  - Basic setting \ Motor feedback (A)

Three different identification methods are offered here:

- 360° electrical
- With min. movement
- Without movement

The criteria for selecting the most suitable identification method are presented below.

Selection criteria for using the suitable pole position identification

For identifying the pole position for the currently activated feedback, the following functions are available which all provide almost the same result. Due to e.g. friction, bearing forces and a trapezoidal field pattern, the results may differ from each other.

▸ Pole position identification (PPI) 360° 📖 209

- The motor must not be braked, blocked or mechanically driven during the pole position identification! This function must not be used for hanging loads!
- Especially in case of idling drives or drives with a low load (inertia / friction), this function delivers the most accurate results.

▸ Pole position identification (PPI) with minimum movement 📖 213

- The motor must not be braked, blocked or driven during the pole position identification! Thus, this function must not be used for hanging loads!
- Regarding the accuracy, this function is in the middle range. A percentage increase of the current amplitude can enhance the accuracy of the results if required.

▸ Pole position identification (PPI) without movement 📖 216

- In case of stalled motors (e.g. with hanging loads), only this function shall be used!
- This function was developed for a wide range of motor characteristics. In case of some motor types, however, the identified pole position angle may differ considerably from the real pole position angle, so that a considerable loss in torque and greater motor losses may occur. Thus, especially when using third-party motors, we recommend the execution of a reference identification with an idling motor ▸ Pole position identification (PPI) 360° . 📖 209

  If the identified values of both processes differ from each other by more than 20°, please contact Lenze.

Detailed information on the respective function can be found in the following subchapters.

11.4.1 Selection of the PPI method for CiA mode

Parameter

Address	Name / setting range / [default setting]		Information
0x2C66:001	PPI mode for 0x6060: Selection • Setting can only be changed if the inverter is disabled.		Selection of the identification method for the CiA operating mode "pole position identification (PLI)(0x6060 = -12) ▸ CiA 402 device profile 309
	1	**PPI 360°**	▸ Pole position identification (PPI) 360° 209
	2	PPI min. movement	▸ Pole position identification (PPI) with minimum movement 213
	3	PPI without movement	▸ Pole position identification (PPI) without movement 216

11.4.2 Monitoring the pole position identification

If an error occurs during the pole position identification or if the pulse inhibit gets active (e.g. due to a short-time undervoltage), the process is stopped with disabling the inverter without the settings being changed.

If the motor was braked or blocked during the process, this will be detected at the end of the measurement and no change will be made (exception: "pole position identification PLI (without movement)").

The error response can be parameterised:

If an error occurs during the pole position identification,
- the procedure is stopped without the settings being changed.
- the response set in 0x2C60 is effected.

Parameter

Address	Name / setting range / [default setting]		Information
0x2C60	PPI monitoring: Response		Selection of the response triggered by the occurrence of an error during the pole position identification (PLI). Associated event IDs: • 537526020 | 0x2009FF04 - PPI - Motor movement too large • 537526035 | 0x2009FF13 - Identification aborted
	0	No response	▸ Severity 574
	1	**Fault > CiA402**	
	2	Warning	

11.4.3 Monitoring the validity of the pole position

Parameter

Address	Name / setting range / [default setting]		Information
0x2C65:001	PPI validation: Activation • Setting can only be changed if the inverter is disabled.		
	0	**Off**	
	1	On	
0x2C65:002	PPI validation: Settings		
	0	**No action**	
	1	Reset PPI validation bit	
	2	Set PPI validation bit	
0x2C65:003	PPI validation: Status • Read only		
	Bit 0	Pole position is valid	
0x2C65:004	PPI validation: Pole position set value -179.9 ... [**0.0**] ... 179.9 °		

11.4.4 Pole position identification (PPI) 360°

NOTICE

Mechanical damage of the motor caused by hanging loads!

Possible consequences: Irreversible damage of the motor.

► The motor must not be braked or blocked during the pole position identification. Thus, this function must not be used for hanging loads!

NOTICE

Thermal overload of the motor!

The motor may be permanently damaged.

► Before executing the pole position identification, check that the following monitoring systems are parameterised correctly.

► Motor overload monitoring (i^2xt)

► Overcurrent monitoring

NOTICE

► Please observe the following: Synchronous motor: Pole position identification (PPI)

Functional description

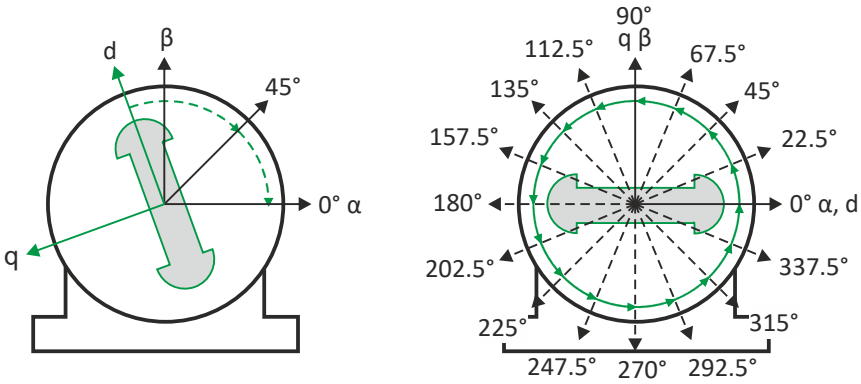

If the servo control is set for synchronous motor and no error is pending, the current is first raised in a ramp-shaped manner to 141 % of the rated motor current after the inverter is enabled.

Left image

First, the rotor is moved from any position of rest to the 0° angle.

- For this purpose, the amplitude of the d current vector is created in the stator coordinate system at a starting angle of 45° and then turned to 0°.
- A sufficiently high amplitude of the d current vector and its rotary motion result in a magnetic force that moves the rotor to the angle 0°.

Right image

Afterwards, the d current vector is turned further in 15 steps by 22.5° each starting at the angle 0°.

- Due to the magnetic forces, the rotor adjusts to the respective angle.
- After 16 steps, the rotor has moved by absolute electrical 360°.

Result

For determining the pole position, a mean value is calculated from all 16 messages. The rotor displacement angle can be recorded via the 0x2DDE parameter (actual motor rotor angle position). The detected pole position is stored in the inverter parameters , 0x2C03:0020x2C03:004. The detected pole position must then be saved.

Abort of the pole position identification

The pole position identification is aborted if the deviations between the rotary motion of the current vector and the rotor exceed the fault tolerance set in 0x2C41:004 (check if parameter is available).

Preconditions for the performance

- The motor must not be braked or blocked during the pole position identification.
- The servo inverter is error-free and in Switched on device state.

Response of the motor during performance

The rotor aligns during the pole position identification. The motor shaft moves by max. one electrical revolution which causes a corresponding movement of the connected mechanics!

How to execute the pole position identification PLI (360°):

1. If the servo inverter is enabled, disable it.Enable operation
2. Set the object 0x2825 to "5" to change to the "pole position identification PLI (360°)" operating mode.
3. Before the PLI can be started, the works mentioned below must be completed.
4. Enable the servo inverter to start the pole position identification (360°). Note: Inhibiting the controller serves to abort the started procedure any time if required without changing the settings.

After the pole position identification has been completed successfully...

...the controller is inhibited automatically and the pole position determined for the activated feedback system is set in the 0x2C03:002 object.

- Save the changed settings.

  The »EASY Starter« serves to save the parameter settings of the servo inverter as parameter file (*.gdc). Saving the parameter settings
- The inverter disable set automatically by the procedure can be deactivated again via the CiA402 control word 0x6040. Enable operation

Adapt pole position identification PLI (360°)

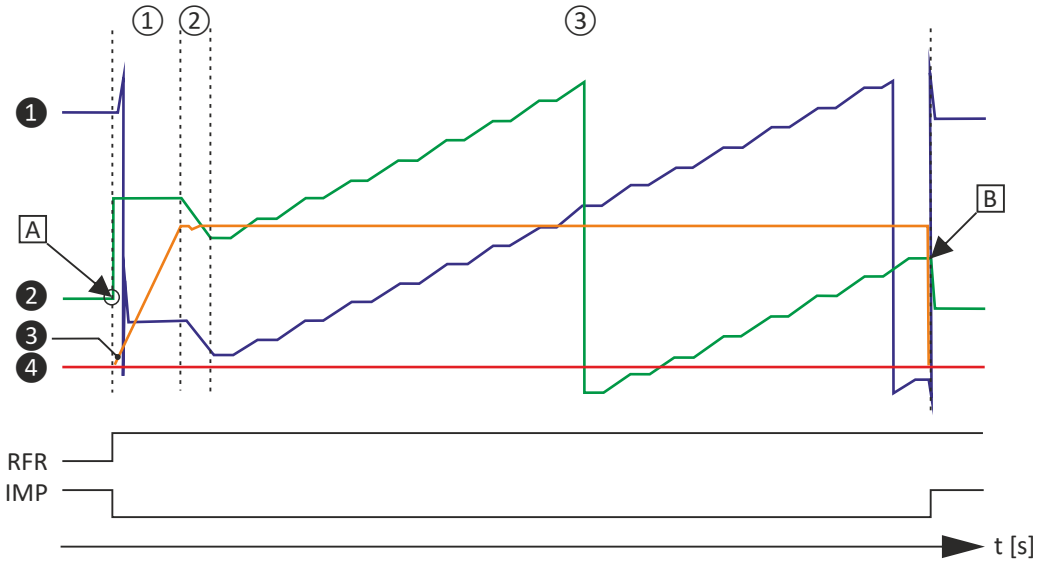

Fig. 58: Chronological sequence of the pole position identification

In case of drives with a high static friction, mass inertia or alternating load, an optimisation may be necessary:

- The amplitude of the current vector must be set so high that the motor with a high mass inertia can be accelerated.
- The cyclic continued rotation of the current vector by 22.5° has to cause an equivalent angular rotation of the motor shaft (rotor). A step function has to be achieved. Here, actual positions with very low overshoots are visible.

NOTICE

Thermal overload of the motor!

The motor may be permanently damaged.

► If no temperature monitoring is available in the motor, and/or the I²xt motor monitoring and the maximum current monitoring are not parameterised correctly, the motor can be permanently damaged if the current amplitude is set too high!

► Motor overload monitoring (i²xt)
► Overcurrent monitoring

Overview of more objects available for

- Identification
- Triggering
- Diagnostics

Tip!

An oscilloscope serves to execute the optimisation

Parameter	Subindex	Value/unit	INFO
0x2825	0	CiA402 mode active [0]	Operating modes [5] for PLI 360°
0x2824	0	Off [0], **On [1]**	
0x6040	0	0x0000	Simulation of the CiA state machine
0x2823	0	100	Progress bar
0x2C61:001	1	100 %	PLI(360°) current amplitude
0x2C61:002	2	40 s	PLI(360°) ramp time
0x2C61:003	3	Field: clockwise [0]	PLI(360°) direction of rotation
0x2C61:004	4	20°	PLI(360°) fault tolerance
0x2C61:005	5	4.81 A	Display
0x2C03:002	2	-90.0°	Detected pole position values
0x2C03:004	4	0.0°	
0x2DDE	0	1850	current rotor angle
0x2D83:002	2	0.03 A	Phase U current
0x2D83:003	3	0.04 A	Phase V current
0x2D83:004	4	-0.01 A	Phase W current
0x2DD1:003	3	0.00 A	Setpoint D current
0x2DD1:001	1	0.01 A	Current D current
0x6073	0	150.0 %	Max current
0x6075	0	3.400 A	Motor rated current, reference for 0x2C61:1
0x2D46:001	1	16.5 A	Overcurrent monitoring: threshold
0x2DDF:001	1	5.00 A	User info regarding rated current
0x2DDF:002	2	10.00 A	User info regarding maximum current

Parameter

Address	Name / setting range / [default setting]	Information
0x2C61:001	Pole position identification (360°) settings: Current amplitude 1 ... [**71**] ... 1000 % • Setting can only be changed if the inverter is disabled.	Percentage adaptation of the current amplitude. • For large machines and high mass inertia values or for linear direct drives, the current amplitude usually must be increased. • Default setting 100 % ≡ 141 % of Rated motor current (0x6075) Note! If the current amplitude is set to > 100 %, the device utilisation (Ixt) monitoring and/or one of the motor monitoring functions may respond and cause the abort of the pole position identification.
0x2C61:002	Pole position identification (360°) settings: Ramp time 1 ... [**40**] ... 600 s • Setting can only be changed if the inverter is disabled.	Percentage adaptation of the ramp time. • For large machines and high mass inertia values, the ramp time must be increased. • For small machines, however, the pole position identification can be accelerated by reducing the ramp time.
0x2C61:003	Pole position identification (360°) settings: Direction of rotation • Setting can only be changed if the inverter is disabled. **0** **CW** 1 CCW	Selection of travel direction. In some situations, it may be helpful to reverse the travel direction for the pole position identification (e. g. for linear motor at the end stop).
0x2C61:004	Pole position identification (360°) settings: Error tolerance 15 ... [**20**] ... 50 °	Setting of the fault tolerance for the plausibility check. • If the rotor position detected via the encoder system is not within the tolerance zone around the position that is output in a controlled manner, the pole position identification is aborted and the parameterised error response is tripped.
0x2C61:005	Pole position identification (360°) settings: Absolute current amplitude • Read only: x.xx A	Display of the absolute current amplitude.

11.4.5 Pole position identification (PPI) with minimum movement

NOTICE

Mechanical damage of the motor caused by hanging loads!

Possible consequences: Irreversible damage of the motor.

► The motor must not be braked or blocked during the pole position identification. Thus, this function must not be used for hanging loads!

NOTICE

Thermal overload of the motor!

The motor may be permanently damaged.

► Before executing the pole position identification, check that the following monitoring systems are parameterised correctly in order to prevent a permanent damage of the motor in the event of an error:

► ▸ Motor overload monitoring (i^2xt) 📖 278

► Overcurrent monitoring

Functional description

If servo control for synchronous motor is set and if no error is pending, the current position is memorised after controller enable, and the current is increased along a ramp for 10 s to 35 % of the rated motor current. This will cause the rotor to align, which, however, is compensated by a position control. If the rotor makes an electrical movement of more than 20°, an error message is output, and the value measured is discarded. This might occur in the case of motors with considerable detent torques.

If the current has reached its final value, a plausibility check is executed after a short interval: in order to detect a non-permissible blocking of the motor, a positive and a negative test angle (± 20°) relative to the current position are defined after the identification. The motor must align itself to these two test angles within a tolerance of 25 %.

Conditions for the execution

- The motor must not be braked or blocked during the pole position identification.
- The servo inverter is error-free and in Switched on device state.

Response of the motor during performance

The motion of the motor will maximally correspond to the set "Max. permissible motion" (Lenze setting: 20°). If a greater motion is detected via the encoder system, the pole position identification is cancelled and the parameterised error response (Lenze setting: Fault) is triggered.

How to execute the pole position identification PLI (min. movement):

1. If the servo inverter is enabled, disable it.Enable operation
2. Set the object 0x2825 to "6" to change to the "pole position identification PLI (min. movement)" operating mode.
3. Enable the servo inverter to start the process.

   Note: Inhibiting the controller serves to abort the started procedure any time if required without changing the settings.

After the pole position identification has been completed successfully...

...the controller is inhibited automatically and the pole position determined for the activated feedback system is set in the 0x2C03:002 object.

- Save the changed settings.

  The »EASY Starter« serves to save the parameter settings of the servo inverter as parameter file (*.gdc). This file can then be imported in the »PLC Designer«. Saving the parameter settings

- The inverter disable set automatically by the procedure can be deactivated again via the CiA402 control word 0x6040. Enable operation

Adapt pole position identification PLI (min. movement)

The process of pole position identification described above can be adapted to the respective machine and the existing moments of inertia by using the parameters described in the following.

NOTICE

Thermal overload of the motor!

The motor may be permanently damaged.

► If no temperature monitoring is available in the motor, and/or the I^2xt motor monitoring and the maximum current monitoring are not parameterised correctly, the motor can be permanently damaged if the current amplitude is set too high!

► Motor overload monitoring (i^2xt)

► Overcurrent monitoring

Parameter

Address	Name / setting range / [default setting]	Information
0x2C62:001	Pole position identification (min. movement) settings: Current amplitude 1 ... [**25**] ... 1000 % • Setting can only be changed if the inverter is disabled.	Percentage adaptation of the current amplitude. • For large machines, high mass inertia values or for linear direct drives, the current amplitude usually must be increased. • Default setting 25 % ≡ 35 % of Rated motor current (0x6075) Note! If the current amplitude is set to > 100 %, the device utilisation (Ixt) monitoring and/or one of the motor monitoring functions may respond and cause the abort of the pole position identification.
0x2C62:002	Pole position identification (min. movement) settings: Ramp time 1 ... [**10**] ... 600 s • Setting can only be changed if the inverter is disabled.	Percentage adaptation of the rate of current rise.
0x2C62:003	Pole position identification (min. movement) settings: Gain 0 ... [**0**] ... 1000 %	Adaptation of the proportional PI controller gain. With the Lenze setting "0 %",the PI controller works as an I controller.
0x2C62:004	Pole position identification (min. movement) settings: Reset time 0.1 ... [**62.5**] ... 6000.0 ms	Adaptation of the reset time of the PI controller. • In order to be able to compensate a positional variation faster, first the reset time should be reduced. If this does not result in the desired behaviour, the proportional gain can be increased. • Ensure that the position control does not get unstable. We therefore recommend you to use an I controller.
0x2C62:005	Pole position identification (min. movement) settings: Max. move permitted 1 ... [**20**] ... 90 °	Adaptation of the permitted movement. • The pole position identification comprises a monitoring function for the follow-up control. If a movement greater than the permissible movement set is detected by the encoder system, the pole position identification is aborted and the error response parameterised is tripped: • In order to detect a non-permissible blocking of the machine, a positive and negative test angle relative to the current position are defined after the identification. The machine must align itself to these two test angles within a tolerance of 25 %. The size of the test angle corresponds to the max. move permitted set here.

Address	Name / setting range / [default setting]	Information
0x2C62:006	Pole position identification (min. movement) settings: Absolute current amplitude • Read only: x.xx A	Display of the absolute current amplitude.

11.4.6 Pole position identification (PPI) without movement

The "Pole position identification (PLI) without movement" function can also be used if no motor revolution is possible (holding brake active).

NOTICE

With an incorrect parameter setting and dimensioning of the inverter, the maximum permissible motor current may be exceeded during the pole position identification.

Possible consequences: Irreversible damage of the motor

► Set the motor data correctly. ▸ Motor data 📖 43

► Only use an inverter that is performance-matched to the motor.

⚠ DANGER!

Uncontrolled acceleration of the motor!

Undefined state of the feedback system, caused by wire breakage!

► Each pole position identification causes an update of the pole position set in the device! Therefore, ensure that the response to open circuit in the feedback system is set to Lenze setting "1: Fault" in 0x2C45! Otherwise, the status of the feedback system in case of open circuit is undefined and the pole position can assume any value. There is a danger that the machine accelerates in an uncontrolled way after pole position identification!

NOTICE

Device state "switched-on"/"operation"

► The process of the pole position identification only lasts some milliseconds. During the pole position identification, the device status does not change. Only after the pole position identification, the Operation enabled device status changes to the Operation enabled device status.

► If pole position identification is started via parameter 0x2825, the inverter is automatically disabled at the end of the pole position identification process.

Conditions

- The wiring of the three motor phases and the motor encoder must be carried out according to the specifications from the mounting instructions.
- The inverter is ready for operation (no fault active).
- For the pole position identification (PPI) without movement, the motor must be at standstill.

NOTICE

► During the pole position identification, the error 0xFF13 ("identification cancelled") may occur. This may be an indication that the motor features are not suitable for this PLI process.

Functional description

After inverter enable, a defined pulse pattern is output that provides currents up to approx. maximum motor current. The respective currents are measured. Based on these currents, the field distribution can be detected so that the pole position can be calculated. Then, the inverter is automatically disabled.

The pole position identification PLI (without movement) does not need any parameterisation.

Preconditions for the performance

- The wiring of the three motor phases and the feedback must be carried out in accordance with the specifications from the hardware manual.
- The motor may be stalled.
- The servo inverter is error-free and in Switched on device state.
- Please observe the notes in the Synchronous motor: Pole position identification (PPI)section.

Response of the motor during performance

The current test pulses cause audible engine noises that may be increased by the machine mechanics depending on the mechanical coupling!

How to execute the pole position identification PLI (without movement):

1. If the servo inverter is enabled, disable it.Enable operation
2. Set the object 0x2825 to "7" to change to the "pole position identification PLI (without movement)" operating mode.
3. Enable the servo inverter to start the process.

   Note: Inhibiting the controller serves to abort the started procedure any time if required without changing the settings.

After the pole position identification has been completed successfully...

...the controller is inhibited automatically and the pole position determined for the activated feedback system is set in the 0x2C03:002 object.

- For permanent storage, the changed settings from the servo inverter must be uploaded in the Controller.

  The »EASY Starter« serves to save the parameter settings of the servo inverter as parameter file (*.gdc). Saving the parameter settings
- The inverter disable set automatically by the procedure can be deactivated again via the CiA402 control word 0x6040. Enable operation

Optional settings (starting performance)

Optionally, a pole position identification without motion can be activated after switching on the servo inverter.

Parameter

Address	Name / setting range / [default setting]		Information
0x2C63:001	PPI without movement: Execution • Setting can only be changed if the inverter is disabled.		Start behavior (with or without pole position identification before the start).
	0	**Disabled**	No pole position is identified.
	1	Only after 1st enable/encoder error	After the first controller enable and after each encoder wire breakage, a PLI without movement takes place. ⚠ CAUTION! After an encoder wire breakage, the drive may accelerate in an uncontrolled manner subsequent to the pole position identification. • Cause: In case of a wire breakage, the feedback system state is undefined and the pole position assumes any value. • Remedy: Set the error response "Trouble" (0x2C450x2C45 = 2) for an encoder wire breakage in order that the pole position will be identified after a wire breakage.
	2	After each enable	After every inverter release, the pole position is identified without any movement.
0x2C63:002	PPI without movement: Current adjust factor 50 ... [**100**] ... 500 % • Setting can only be changed if the inverter is disabled.		

11.5 Cable check

This function serves to detect wiring errors or cable damage which can cause uncontrolled movements of the machine during the commissioning phase or during operation. The function therefore helps to prevent machine damage and serves to correct these errors as quickly as possible.

The **Cable Check** function should be executed manually by the user while the machine is commissioned, in order to identify typical errors that may occur during the machine installation.

Typical errors

- The motor encoders are connected to the wrong device before initial switch-on, whereas the motor is connected to the right device. If the motor encoders that are incorrectly connected are of the same type, the motor encoder monitoring does not detect any error.
- The motor encoders are connected to the right device, however, the motor is connected to the wrong device.
- The connection of the motor phases to the device is reversed.
- Individual wires of the rotary transducer are connected incorrectly.

How to manually execute the Cable Check function:

Preconditions

- The motor can remain coupled to the kinematics.
  - In the case of drives without a motor holding brake, the rotor must be able to move by 20 ° (electrically). This makes it necessary to set the operating mode of the motor holding brake to "No brake connected".0x2820:001 ▸ 0x2820:001 = 2
  - In the case of drives with a motor holding brake, the test is performed against the closed motor holding brake. In the following parameter, the operating mode must be set to 0 or 1. 0x2820:001 ▸ 0x2820:001
- The device must not be in the Fault state.
- 24 V supply voltage must be available.
- The display on the front of the blue LED shows ON or is blinking.
- The device must be supplied with mains voltage. Parameter status 0x6041, Bit 40x6041, Bit 4 = TRUE
- The device must not be in the STO state. The safety functions must be parameterized. Parameter status: 0x6041, Bit 15 0x6041, Bit 15 = FALSE
- The motor data must be set correctly.
- No error message must be active. Parameter status: 0x6041, Bit 3 0x6041, Bit 3 = FALSE. If an error message is active, first remove these errors and reset the error message.
- The motor control must be set to:
  - Servo control - synchronous motor (SM) or
  - Servo control - asynchronous motor (ASM)

  The function only supports these two motor controls.
- The behavior after switch-on must be set. 0x2C64 = 0.

1. Open the »EASY Starter« engineering tool.
2. Establish an online connection to the device.
3. Call the **Motor commissioning** tab in the workspace of the »EASY Starter«.
4. Call the **Feedback** tab there.
5. In the jalousie **Cable check**: **Motor and motor encoder**, execute the **Cable Check** function.
   The Cable Check function is now activated.
6. Activate the device via the CiA402 control word 0x6040 ▸ 0x6040 or 0x6048 0x6048 for axis B

Execution of the function is indicated as completed in the »EASY Starter«after approx. one second. Additionally, the »EASY Starter« indicates whether an error has occurred during the check:

The **Cable Check** function can always be started via the **Execute Cable Check** button if the preconditions for this are met.

No error detected by the Cable Check function

The device changes to the **"Operation enabled"** state.

- Deactivate the device. e.g. via the control word. You can do this using keys F8 / F9 in the »EASY Starter«.
- Deactivate the Cable Check function via the parameter and set a selection other than 15. 0x2825 0x2825

Error detected by the Cable Check function

If the Cable Check function detects an error, the i700 servo inverter automatically changes to the Fault status.

How to remove errors:

1. Consult the logbook to identify the error causes.
2. Switch off the power supply and 24 V supply of the device.
3. Check the wiring and correct it, if necessary.
4. Execute the test again.

The "Identification" status word is also used by other functions. The display is therefore only valid as long as no other function using this status word is active. 0x28320x2832

During operation, the Cable Check function can be automatically executed by the device itself, in order to detect damage on the motor or motor encoder already when the machines are switched on.

Damage during operation

Typical damage that may occur during operation

- Wire breakage on the motor encoder and/or motor cable
- Whole motor encoder cable and/or motor cable torn off
- Screwed connections that are loosening
- Loose contacts

Starting condition for the Cable Check

The following starting conditions can be set for the automatic Cable Check function:

- Check only at initial switch-on or after motor encoder error 0x2641:001 0x2641:001 = 1
- Check after every switch-on 0x2641:0010x2641:001 = 2

Observe the line diagrams for configuring the controller.

How to carry out the Cable check automatically

Preconditions

- The motor can remain coupled to the kinematics.
  - In the case of drives without a motor holding brake, the rotor must be able to move by 20 ° (electrically). This makes it necessary to set the operating mode of the motor holding brake to "No brake connected".0x2820:001 ▸ 0x2820:001 = 2
  - In the case of drives with a motor holding brake, the test is performed against the closed motor holding brake. In the following parameter, the operating mode must be set to 0 or 1. 0x2820:001 ▸ 0x2820:001
- The device must not be in the Fault state.
- 24 V supply voltage must be available.
- The display on the front of the blue LED shows ON or is blinking.
- The device must be supplied with mains voltage. Parameter status 0x6041, Bit 40x6041, Bit 4 = TRUE
- The device must not be in the STO state. The safety functions must be parameterized. Parameter status: 0x6041, Bit 15 0x6041, Bit 15 = FALSE
- The motor data must be set correctly.
- No error message must be active. Parameter status: 0x6041, Bit 3 0x6041, Bit 3 = FALSE. If an error message is active, first remove these errors and reset the error message.
- The motor control must be set to:
  - Servo control - synchronous motor (SM) or
  - Servo control - asynchronous motor (ASM)

  The function only supports these two motor controls.
- The behavior after switch-on must be set. 0x2C64 = 0.

1. Open the »EASY Starter« engineering tool.
2. Establish an online connection to the device.
3. Call the **Motor commissioning** tab in the workspace of the »EASY Starter«.
4. Call the **Feedback** tab there.
5. In the jalousie **Cable check**: **Motor and motor encoder**, execute the **Cable Check** function.
   The Cable Check function is now activated.
6. In a last step, changed settings must be saved with mains failure protection.

When the pole position identification is set after every switch-on and Cable Check, the pole position identification is carried out first, followed by the Cable Check.

Depending on the parameter setting in 0x2C64:1, the Cable Check starts automatically if the controller activates operation of the device via the CiA402 control word. The check takes approx. one second. During this time, 0x2C64, bit 1 is = TRUE A possibly available motor holding brake remains closed. In this case, the rotor is moved against the closed motor holding brake. If no motor holding brake is available, the rotor of the motor is moved electrically by approx. 20 °. The device remains in the switched-on state until the cable check has been completed.

The Cable Check function can always be started via the Execute Cable Check button if the preconditions for this are met.

Possible error sources

- Failure of a motor phase
- Incorrect direction of rotation detected.

Parameter

Address	Name / setting range / [default setting]		Information
0x2C64:001	Cable Check: Behavior after switch on • Setting can only be changed if the inverter is disabled.		
	0	**No action**	
	1	Check at first switch on/after feedback error	
	2	Check at every switch on	
0x2C64:002	Cable Check: Status word • Read only		
	Bit 0	Cable check enabled	
	Bit 1	Cable check running	
	Bit 2	Cable check completed	
	Bit 3	Cable check failed	

12 Configuring the motor control

This chapter contains all functions and settings relevant for the motor control.

Basic procedure of commissioning the motor control

In the first step, the rated data of the motor must be set. The other steps depend on the respective application case.

There are several options for setting the motor data and optimising the control loops. Basically, you can select between a manual and an automatic process. Whether a setting can be applied or not depends on the motor (Lenze motor yes/no) and the application. If possible, use the possible setting listed first in the following diagram since this one leads to the most accurate results.

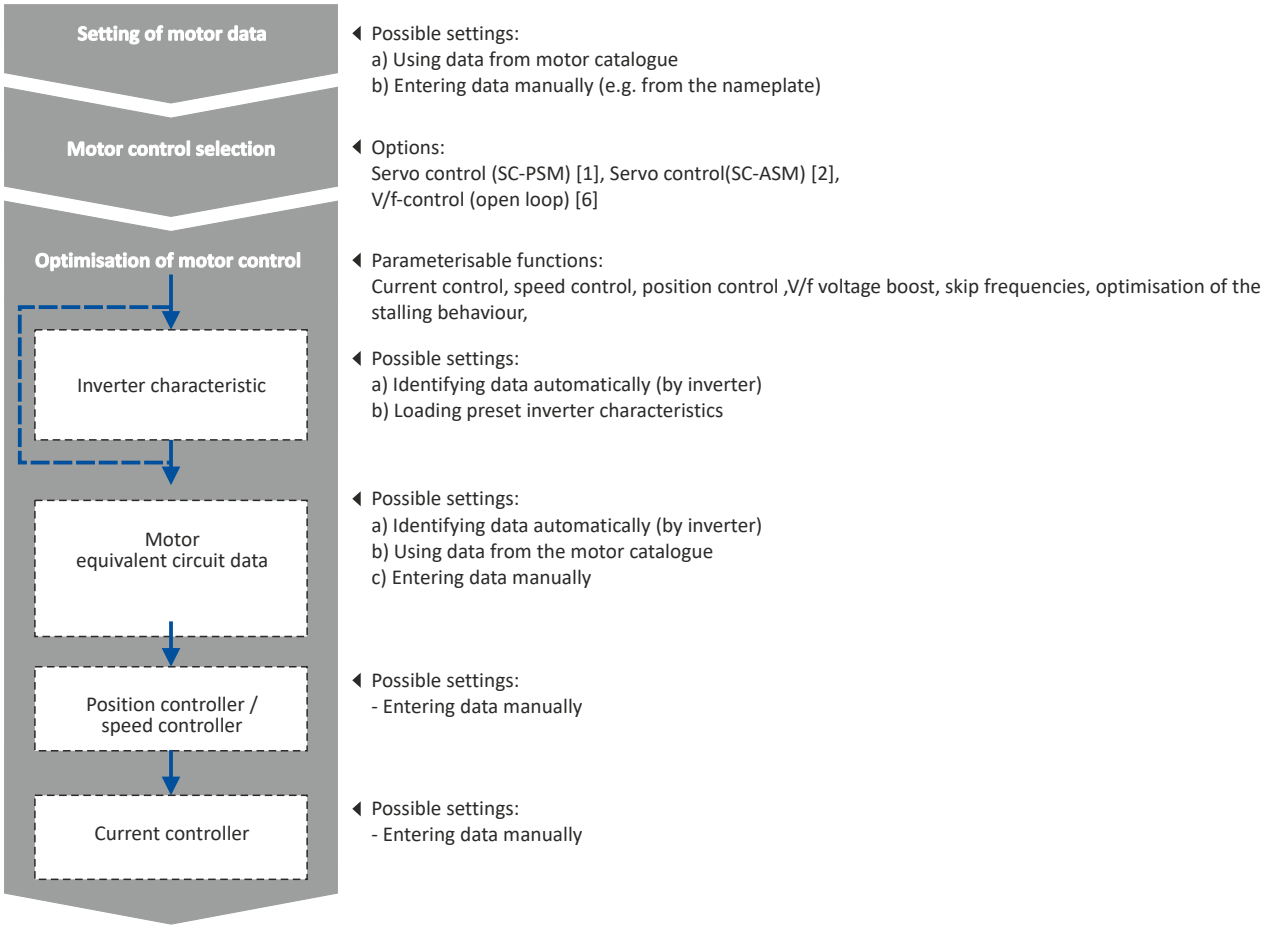

12.1 Servo control for synchronous motor (SC-PSM)

The motor control is based on a feedback, field-oriented and cascaded controller structure and enables a dynamic and stable operation in all four quadrants.

Preconditions

- The servo control (SC-PSM) is only suitable for synchronous motors.
- The servo control (SC-PSM) requires a feedback of the position.

12.1.1 Required commissioning steps

1. Check wiring by means of manual test modes: Testing the motor control 📖 291
2. Activate motor control type: 0x2C00 = "Servoregelung (SC-PSM) [1]".
3. Set motor data: Motor data 📖 43
4. Set motor monitoring:
   - Motor temperature monitoring 📖 286
5. Configuring the feedback system 📖 169
6. Only required for motors of other manufacturers:
   - Set and optimise current controller: Current controller 📖 256
   - Correction of the stator leakage inductance (Lss)... 📖 265
   - Synchronous motor: Pole position identification (PPI) 📖 207
7. Only required for an automatic calculation of the speed controller parameters:
   - Define total moment of inertia: Tuning of the motor and the speed controller 📖 246
8. Set speed controller: Speed controller 📖 253.
9. Set position controller: Position controller 📖 263
10. Optional: Synchronous motor (SM): Compensate temperature and current influences 📖 270
11. Optional: Jerk limitation 📖 274
12. Optional: Notch filter (band-stop filter) 📖 275
13. Optional: Short-circuit braking 📖 239

12.2 Servo control for asynchronous motor (SC-ASM)

The motor control is based on a feedback, field-oriented and cascaded controller structure and enables a dynamic and stable operation in all four quadrants.

Preconditions

- The servo control (SC ASM) is only suitable for asynchronous motors.
- The servo control (SC ASM) requires a feedback of the position.

12.2.1 Required commissioning steps

1. Check wiring by means of manual test modes: Testing the motor control 🕮 291
2. Activate motor control type: 0x2C00 = "Servo control (SC ASM) [2]".
3. Set motor data: Motor data 🕮 43
4. Configuring the feedback system 🕮 169
5. Only required for motors of other manufacturers:
   - Set and optimise current controller: Current controller 🕮 256
   - Correction of the stator leakage inductance (Lss)... 🕮 265
6. Only required for an automatic calculation of the speed controller parameters:
   - Define total moment of inertia: Tuning of the motor and the speed controller 🕮 246
7. Set speed controller: Speed controller 🕮 253.
8. Set position controller: Position controller 🕮 263
9. Only required for motors of other manufacturers:
   - Set field controller: ASM field controller 🕮 259
   - Set field weakening controller: ASM field weakening controller 🕮 260
10. Optional: Correction of the stator leakage inductance (Lss)... 🕮 265
11. Optional: Asynchronous motor (ASM): Identifying Lh saturation characteristic 🕮 271
12. Optional: Estimate optimum magnetising current 🕮 273
13. Optional: Jerk limitation 🕮 274
14. Optional: Notch filter (band-stop filter) 🕮 275
15. Optional: DC braking 🕮 238

12.3 V/f characteristic control for asynchronous motor (VFC open loop)

The V/f characteristic control is a motor control for conventional frequency inverter applications. It is based on a simple and robust control mode for the operation of asynchronous motors with a linear or square-law load torque characteristic (e.g. fan). Because of the minimal parameterisation effort, such applications can be commissioned easily and quickly.

Preconditions

- The V/f characteristic control is only suitable for asynchronous motors.
- If you want to actuate a drive with a square-law V/f characteristic: Please always check whether the corresponding application is suitable for operation with a square-law V/f characteristic!
- Set the motor data according to the information on the nameplate of the motor. ▸ Motor data 📖 43

12.3.1 Required commissioning steps

1. Check wiring by means of manual test modes. ▸ Testing the motor control 📖 291
2. Activate motor control type: 0x2C00 = "V/f characteristic control (VFC open loop) [6]".
3. Set limiting factors for the V/f characteristic:
   1. 0x2540:001, Rated mains voltage
   2. 0x2B01:001, Base voltage
   3. 0x2B01:002, Base frequency
4. Set and optimise current controller ▸ Current controller. 📖 256

   Setting and optimising the current controller is only required if at least one of the following functions is active:

   - Voltage vector control ▸ Activate voltage vector control (Imin controller) 📖 230
   - DC braking ▸ DC braking 📖 238
   - Flying restart function ▸ Flying restart circuit 📖 236
5. Select a characteristic shape suitable for the application ▸ Define V/f characteristic shape. 📖 228
6. Set voltage boost 📖 232
7. Activate voltage vector control (Imin controller) 📖 230
8. Imax controller 📖 262
9. Optional ▸ Set load adjustment 📖 233
10. Optional ▸ Flying restart circuit 📖 236
11. Optional ▸ Set slip compensation 📖 233
12. Optional ▸ Set oscillation damping 📖 234

12.3.2 Basic setting

The base voltage and the base frequency define the ratio of the two variables and thus the gradient of the V/f characteristic.

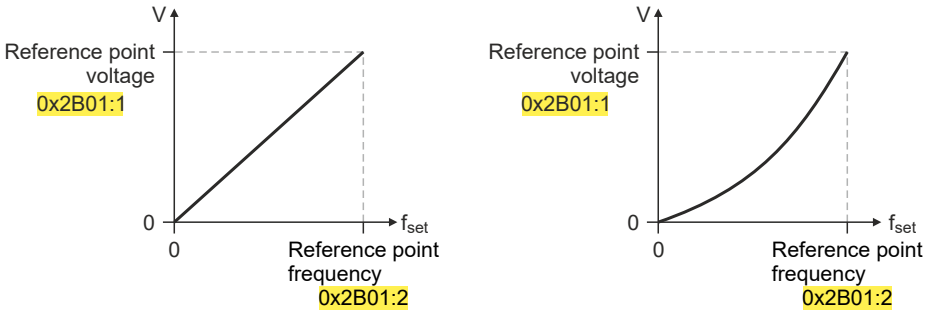

Parameter

Address	Name / setting range / [default setting]	Information
0x2B01:001	V/f shape data: Base voltage 0 ... [**225**] ... 5000 V	Base voltage and base frequency define the V/f ratio and thus the gradient of the V/f characteristic. • The V/f base voltage is usually set to the rated motor voltage 0x2C01:007. • The V/f base frequency is usually set to the rated motor frequency 0x2C01:005.
0x2B01:002	V/f shape data: Base frequency 0 ... [**270**] ... 5000 Hz	

12.3.3 Define V/f characteristic shape

For adaptation purposes to different load profiles, you can select the shape of the characteristic:

Parameter

Address	Name / setting range / [default setting]		Information
0x2B00	V/f characteristic shape • Setting can only be changed if the inverter is disabled.		Selection of the V/f characteristic shape for the adaptation to different load profiles.
	0	**Linear**	Linear characteristic for drives with constant load torque over the speed. ▸ Linear V/f characteristic 📖 228
	1	Quadratic	Square-law characteristic for drives with a square-law load torque over the speed. • Square-law V/f characteristics are preferably used for centrifugal pumps and fan drives. • Please always check whether the corresponding application is suitable for operation with a square-law V/f characteristic! • If your pump drive or fan drive is not suitable for operation with a square-law V/f characteristic, use the linear V/f characteristic instead. ▸ Square-law V/f characteristic 📖 228
	2	Adaptive	User-definable characteristic with 3 grid points.
	3	Eco	Linear characteristic with energy optimisation in the partial load operational range.

12.3.3.1 Linear V/f characteristic

The linear V/f characteristic leads to a constant torque.

12.3.3.2 Square-law V/f characteristic

The square-law V/f characteristic is typically used in heating, ventilation and climate applications to control the speed of fans and centrifugal pumps.

12.3.3.3 User-definable V/f characteristic

The "user-definable V/f characteristic" is provided for the individual adjustment of the motor magnetisation to the actual application if linear and square-law characteristics are not suitable.

- The characteristic is defined by means of 11 parameterisable grid points (voltage/ frequency values).
- In the Lenze setting the 11 grid points represent a linear characteristic:

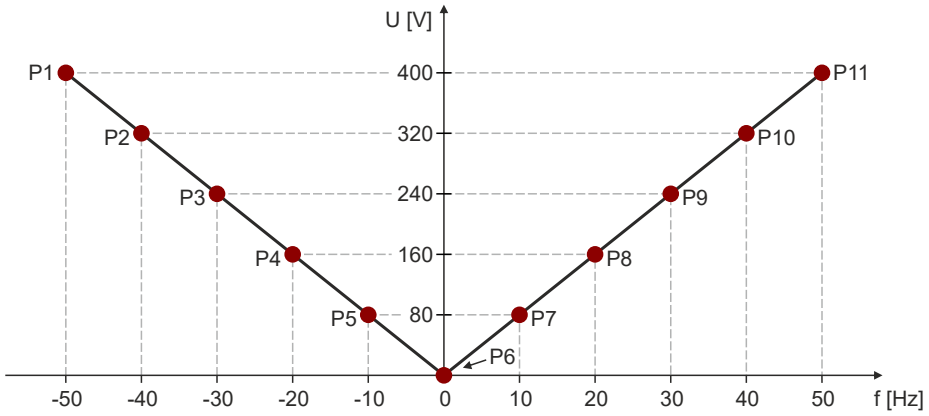

	P1	P2	P3	P4	P5	P6	P7	P8	P9	P10	P11
V	400 V	320 V	240 V	160 V	80 V	0 V	80 V	160 V	240 V	320 V	400 V
f	-50 Hz	-40 Hz	-30 Hz	-20 Hz	-10 Hz	0 Hz	10 Hz	20 Hz	30 Hz	40 Hz	50 Hz

Parameter

Address	Name / setting range / [default setting]	Information
0x2B02:001	Frequency grid points (x) user V/f characteristic: x1 = f01 -5000 ... [**-50**] ... 5000 Hz	Freely parameterizable V/f characteristic (values for X axis). These settings define the adaptive frequency values.
0x2B02:002	Frequency grid points (x) user V/f characteristic: x2 = f02 -5000 ... [**-40**] ... 5000 Hz	
0x2B02:003	Frequency grid points (x) user V/f characteristic: x3 = f03 -5000 ... [**-30**] ... 5000 Hz	
0x2B02:004	Frequency grid points (x) user V/f characteristic: x4 = f04 -5000 ... [**-20**] ... 5000 Hz	
0x2B02:005	Frequency grid points (x) user V/f characteristic: x5 = f05 -5000 ... [**-10**] ... 5000 Hz	
0x2B02:006	Frequency grid points (x) user V/f characteristic: x6 = f06 -5000 ... [**0**] ... 5000 Hz	
0x2B02:007	Frequency grid points (x) user V/f characteristic: x7 = f07 -5000 ... [**10**] ... 5000 Hz	
0x2B02:008	Frequency grid points (x) user V/f characteristic: x8 = f08 -5000 ... [**20**] ... 5000 Hz	
0x2B02:009	Frequency grid points (x) user V/f characteristic: x9 = f09 -5000 ... [**30**] ... 5000 Hz	
0x2B02:010	Frequency grid points (x) user V/f characteristic: x10 = f10 -5000 ... [**40**] ... 5000 Hz	
0x2B02:011	Frequency grid points (x) user V/f characteristic: x11 = f11 -5000 ... [**50**] ... 5000 Hz	

Address	Name / setting range / [default setting]	Information
0x2B03:001	Voltage grid points (y) user V/f characteristic: y1 = U01 (x = f01) 0.00 ... [**400.00**] ... 1000.00 V	Freely parameterizable V/f characteristic (values for Y axis). These settings define the adaptive voltage values.
0x2B03:002	Voltage grid points (y) user V/f characteristic: y2 = U02 (x = f02) 0.00 ... [**320.00**] ... 1000.00 V	
0x2B03:003	Voltage grid points (y) user V/f characteristic: y3 = U03 (x = f03) 0.00 ... [**240.00**] ... 1000.00 V	
0x2B03:004	Voltage grid points (y) user V/f characteristic: y4 = U04 (x = f04) 0.00 ... [**160.00**] ... 1000.00 V	
0x2B03:005	Voltage grid points (y) user V/f characteristic: y5 = U05 (x = f05) 0.00 ... [**80.00**] ... 1000.00 V	
0x2B03:006	Voltage grid points (y) user V/f characteristic: y6 = U06 (x = f06) 0.00 ... [**0.00**] ... 1000.00 V	
0x2B03:007	Voltage grid points (y) user V/f characteristic: y7 = U07 (x = f07) 0.00 ... [**80.00**] ... 1000.00 V	
0x2B03:008	Voltage grid points (y) user V/f characteristic: y8 = U08 (x = f08) 0.00 ... [**160.00**] ... 1000.00 V	
0x2B03:009	Voltage grid points (y) user V/f characteristic: y9 = U09 (x = f09) 0.00 ... [**240.00**] ... 1000.00 V	
0x2B03:010	Voltage grid points (y) user V/f characteristic: y10 = U10 (x = f10) 0.00 ... [**320.00**] ... 1000.00 V	
0x2B03:011	Voltage grid points (y) user V/f characteristic: y11 = U11 (x = f11) 0.00 ... [**400.00**] ... 1000.00 V	

12.3.4 Activate voltage vector control (Imin controller)

The voltage vector control is used if a comparatively high starting torque must be provided.
This function ensures that the required motor current is maintained in the lower speed range.

NOTICE

The boost function described here adds to the ▸ Set voltage boost function. 📖 232

Only set one of the two "boost" functions.

► Recommendation: torque increase in the lower speed range

► Take into consideration that the increased current at low speeds also entails higher heat losses of the motor.

- The voltage vector control is activated by defining a current setpoint.
- For the automatic calculation of the control parameters, the "Calculate Imin controller" function is provided via parameter .

Parameter

Address	Name / setting range / [default setting]	Information
0x2B04	V/f boost controller - current setpoint 0.00 ... [**0.00**] ... 500.00 A	Setting of the current setpoint for the voltage vector control. • The setting "0.00 A" deactivates the voltage vector control. • When defining the current setpoint, we recommend you to provide a reserve of 20 % in order to largely exclude a "stalling" of the motor caused by unexpected additional loads. • Example for starting torque = rated motor torque: Set the current setpoint to approx. 120 % of the load current.

Address	Name / setting range / [default setting]	Information
0x2B05:001	V/f boost controller settings: Gain 0.00 ... [**148.21**] ... 750.00 V/A	Setting of the gain for the voltage vector control.
0x2B05:002	V/f boost controller settings: Reset time 0.01 ... [**3.77**] ... 2000.00 ms	Setting of the reset time for the voltage vector control.
0x2B05:003	V/f boost controller settings: Dynamic current setpoint 0.00 ... [**0.00**] ... 500.00 A	

12.3.5 Set voltage boost

As an alternative for the “Activate voltage vector control (Imin controller)“ function, a constant, load-independent voltage boost can be specified for low speeds (below the V/f rated frequency) or for a motor standstill in order to optimize the starting performance.

⚠WARNING!

Insufficient cooling of the motor due to longer operation at standstill.

If the motor is operated at standstill for a longer time - especially in case of smaller motors - the motor can be destroyed by overtemperature!

► Connect the PTC thermistor (single sensor according to DIN 44081 or triple sensor according to DIN 44082) or thermal contact (normally-closed contact) ▸ Motor temperature monitoring. 📖 286

► Parameterise and activate the ▸ Motor overload monitoring (i²xt). 📖 278

NOTICE

The voltage boost is added to the function ▸ Activate voltage vector control (Imin controller). 📖 230

Only set one of the two "boost" functions.

Recommendation: voltage vector control

For magnetising the motor, consider a sufficient time from the controller enable to the start of the speed ramp function generator. The bigger the motor the longer the time required for magnetisation. A motor with a power of 90 kW requires up to 2 seconds.

Depending on the required starting torque, the voltage boost must be set so that the required motor current will be available after controller enable.

- The voltage boost can be calculated by multiplying the stator resistance by the rated magnetising current:

$$\text{Starting current} \sim V_{Boost} = R_s \times I_{mN}$$

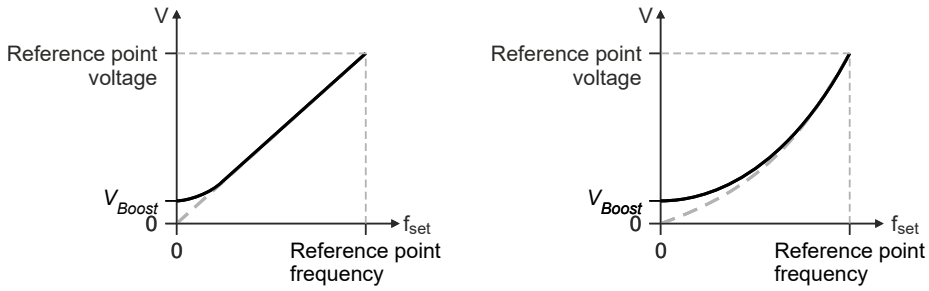

- Optionally, the voltage boost can be determined empirically by increasing the setting until the rated magnetising current flows.
- The voltage boost is added geometrically to the voltage of the characteristic:

$$V = \sqrt{V^2_{characteristic} + V^2_{Boost}}$$

Parameter

Address	Name / setting range / [default setting]	Information
0x2B06	Voltage boost 0.0 ... [**0.0**] ... 100.0 V	Setting of the voltage boost for the voltage vector control.

12.3.6 Set load adjustment

⚠CAUTION!

If the load adjustment is too high, the motor current may increase in idle state and the motor may overheat!

Parameter

Address	Name / setting range / [default setting]	Information
0x2B07:001	Load adaption: Direction of rotation • Setting can only be changed if the inverter is disabled. **0 Passive load** 1 Active load CCW 2 Active load CW	Selection for adapting the characteristic as a function of the load in case of CW and CCW rotation.
0x2B07:002	Load adaption: Load adaption value 0.00 ... [**20.00**] ... 200.00 %	Setting of the load adaptation in [%] proportionally to the rated motor torque to obtain an appropriately "rigid" drive behavior even after start-up. • For starting torque = rated motor torque, a load adaptation of 50 % is suitable for most applications.

12.3.7 Set slip compensation

The speed of an asynchronous motor decreases as load is applied. This load-dependent speed drop is called “slip”. The slip compensation serves to counteract the load-dependent speed loss.

Observe correct parameterisation of the rated motor frequency 0x2C01:005 and the rated motor speed 0x2C01:004. Both parameters serve to calculate the rated motor slip.

Parameter

Address	Name / setting range / [default setting]	Information
0x2B09:001	Slip compensation: Gain -200.00 ... [**0.00**] ... 200.00 %	Adjustment in percent of the slip calculated. • For instance required for deviations of the real motor data from the nameplate data. • A setting of 100 % corresponds to the rated slip of the machine in the nominal operating point.
0x2B09:002	Slip compensation: Filter time 1 ... [**2000**] ... 6000 ms	Filter time for the slip compensation.

12.3.8 Set oscillation damping

The oscillation damping serves to reduce the oscillations during no-load operation which are caused by energy oscillating between the mechanical system (mass inertia) and the electrical system (DC bus). Furthermore, the oscillation damping can also be used to compensate for resonances.

Damping is possible only for constant oscillations at a steady-state operating point.

Oscillations occurring sporadically cannot be damped.

Oscillation damping is not suitable for oscillations occurring during dynamic processes (e.g. accelerations or load changes). Oscillation damping is only active if the setpoint speed is greater than 10 rpm and the DC-bus voltage exceeds a value of 100 V.

The determination of the oscillation is based on the active current. In order to obtain the alternating component of the active current, this current is differentiated. This signal is then passed through a PT1 filter.

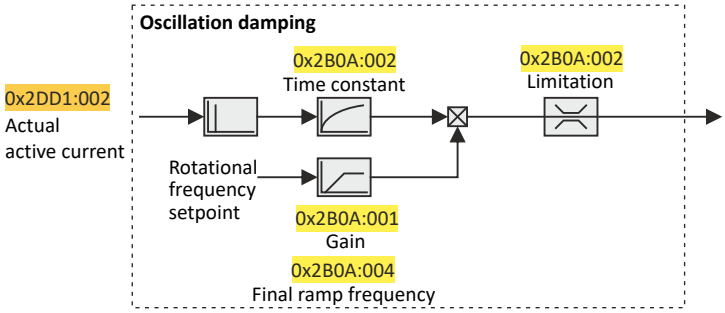

Identification of the oscillation

Before the oscillation damping can be parameterised, the oscillation must be identified. One option is to look at the motor current when the oscillation damping is switched off (gain = 0 %). The oscilloscope function of the »PLC Designer« enables to record the following currents:

- Q current 0x2DD1:002
- Total current 0x2DD1:005

A passive load and continuous operation with constant speed (steady-state operation) result in a constant current. If the drive oscillates, the motor current oscillates as well. This makes it possible to detect the frequency and amplitude of the oscillation by means of the AC component in the motor current. Hereinafter this AC component will be referred to as "current oscillation".

Parameter setting

The gain of the oscillation damping is to be set according to the following equation:

$$\text{oscillation damping gain} = \frac{\text{current amplitude}}{\sqrt{2} \times \text{max. device current}} \times 100\%$$

The time constant must be set so that the oscillation can be dampened, but that higher-frequency components are filtered from the signal. The time constant is determined from the reciprocal value of the double current oscillation frequency:

$$\text{time constant} = \frac{1}{2 \times \text{oscillation frequency}}$$

The calculated oscillation frequency can be limited before being added to the rotating field frequency. The maximum frequency can be derived from the amplitude of the current oscillation, the rated motor current and the slip frequency of the connected motor:

$$\text{max. frequency} = \frac{2 \times \text{current oscillation amplitude}}{\text{rated motor current}} \times \text{rated slip frequency}$$

Parameter

Address	Name / setting range / [default setting]	Information
0x2B0A:001	Oscillation damping: Gain -100 ... [**20**] ... 100 %	Gain of the oscillation signal. • With the setting 0, oscillation damping is deactivated.
0x2B0A:002	Oscillation damping: Filter time 1 ... [**5**] ... 600 ms	Time constant of the PT1 filter.
0x2B0A:003	Oscillation damping: Limitation 0.1 ... [**0.2**] ... 20.0 Hz	Limitation of the calculated oscillation frequency.
0x2B0A:004	Oscillation damping: Final ramp frequency 0 ... [**0**] ... 100 %	Ramp end frequency from which the gain factor is expected to have reached its rated value. • By setting a ramp end frequency, a possible negative impact of the oscillation damping on the concentricity factor in the lower speed range can be reduced. • The ramp end frequency refers to the rated motor frequency in percentage terms.

12.3.9 Optimising the stalling behaviour

The stalling protection function or the maximum permissible motor current in the field weakening range can be adapted.

- If the motor stalls in the field weakening range, the override point can be shifted by reducing the set value so that the motor stalling can be prevented.
- If the motor does not provide enough torque in the field weakening range, the set value must be increased.

Parameter

Address	Name / setting range / [default setting]	Information
0x2B0C	Override field weakening -500.0 ... [**0.0**] ... 500.0 Hz	Offset of the override point for field weakening.

12.3.10 Flying restart circuit

The "flying restart" function serves as a protective function against high compensation currents. High compensation currents can occur in the V/f characteristic control if the drive is not at standstill at the time the inverter is enabled. The "flying restart" function detects the motor speed by means of a test current and uses this information to define the frequency setpoint.

⚠CAUTION!

If the "flying restart" function is deactivated and the inverter is not enabled at standstill, the output voltage and the output frequency do not match the current motor speed.

High compensation currents may flow! First the drive is braked towards 0 Hz to be then accelerated again!

► Ensure that the drive is at standstill before the inverter is enabled.

Flying restart process

If this function is active, the flying restart process starts after the inverter is enabled.

1. The inverter reports the started flying restart process to the Controller via bit 8 in the Lenze status word0x2831.
2. If a speed is found, it is reported to the Controller via bit 9 in the Lenze status word.
3. The Controller reports to the inverter via bit 0 in the Lenze control word 0x2830 that the detected speed has been accepted. As long as this is not the case, no further flying restart process is possible.

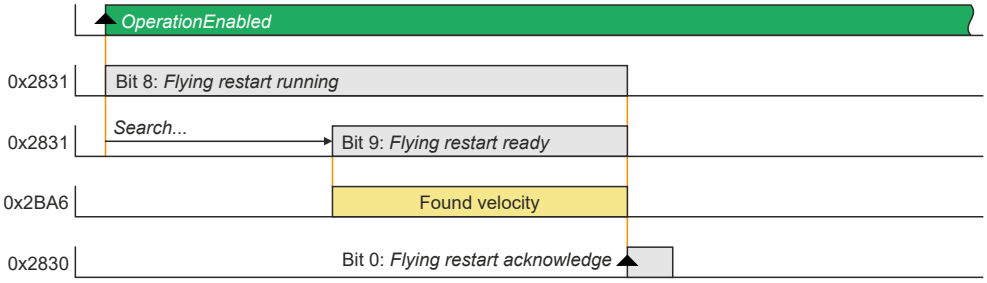

Parameter setting

The flying restart algorithm needs a motor voltage as exact as possible. Thus, a previous detection of the inverter error characteristic is absolutely necessary. Compensate inverter influence to output voltage In addition to the exact motor voltage, a detailed knowledge of the stator resistance is required. If the flying restart process does not work as desired, slightly adapt the setting of the stator resistance in the 0x2C01:002 object. Bit 1 in the Lenze control word 0x2830 serves to block a flying restart process.

The flying restart process involves a control loop, the controller parameter 0x2BA3 of which must be adapted to the motor. The automatic calculation is made with the parameter ▸ 0x2822:022.

The actual flying restart process can be adjusted via the following parameters:

Parameter

Address	Name / setting range / [default setting]	Information
0x2BA0	Activate flying restart	Activation of the additional "flying restart" function. If the "flying restart" function is activated ("1: on") and the inverter disable is deactivated, a flying restart process is automatically started for determining the current motor speed if the following conditions are met: • The V/f characteristic control is set as motor control. • The CiA402 mode is selected as drive mode. • The "flying restart" function is not blocked via bit 2 in the Inverter control word (0x2830). • No DC-injection braking is active. • No motor phase failure has been identified.
	0 **Off**	
	1 On	
	2 Without acknowledge or blocking	
0x2BA1	Flying restart circuit 0 ... [**15**] ... 100 %	
0x2BA2	Start frequency -600.0 ... [**20.0**] ... 600.0 Hz	Start frequency of flying restart algorithm • If it is foreseeable at which frequency the motor can be restarted on the fly, set the frequency here.
0x2BA3	Integration time 1 ... [**600**] ... 60000 ms	Integration time of the angle controller • The default setting is adapted for medium-power machines. • A guide value for the integration time can be calculated as a function of the motor power with the following equation: Ti = 1.1 µ/W * Rated power (0x2C01:006) + 9.4 ms • For accelerating the search process, this guide value can be reduced. • If the flying restart frequency oscillates too much, increase the integration time again. • A longer integration time extends the time for a flying restart of the drive.
0x2BA4	Minimum deviation 0.00 ... [**5.00**] ... 90.00 °	Setting of the minimum permissible deviation.
0x2BA5	Delay time 0 ... [**0**] ... 10000 ms	In order to prevent the start of a flying restart process if the controller inhibit time is too short, a minimum active time for the inverter disable can be set here in order that a flying restart process will be started. As a pulse inhibit > 500 ms causes a controller inhibit, this also applies to pulse inhibit.
0x2BA6:001	Result: Determined speed [rpm] • Read only: x rpm	Display of the determined speed in [rpm].
0x2BA6:002	Result: Determined speed [n unit] • Read only: rpm	Display of the determined speed in [n unit].

12.4 Parameterisable motor functions

12.4.1 DC braking

The control modes for asynchronous motors provide the opportunity to use the "DC-braking" function (DC-injection braking) for braking. In this case, the motor control injects a DC current the amplitude of which is adjustable.

Preconditions

Using the "DC braking" function, the motor control injects a DC current, the amplitude of which is adjustable in the 0x2B80 parameter. To this end, it is necessary that the current control is adapted to the corresponding motor. For setting and optimising the current controller, see Current controller. 📖 256

Details

The function can be used as follows:

1. "DC braking" can be parameterised via bit 6 in the Lenze control word 0x2830.

   In this case, the motor system itself can be used as an energy converter.

   This option is useful if

   - the system is not provided with a brake resistor required for absorbing the braking energy. This method requires that a sufficient braking torque can be achieved with "DC braking".
   - the power of the brake chopper to be transformed is limited and thus must be exclusively used for the main drives of the DC network. The quality of the deceleration ramp via "DC braking" is sufficient for auxiliary drives and unburdens the brake chopper.
   - a fan drive is to be braked in the V/f characteristic operation.

2. "DC braking" can be parameterised as a response to minor faults.

   An example of a minor fault is the error of an encoder of an asynchronous machine. Due to the error, the quick stop function cannot be executed anymore. An alternative is provided by the guided shutdown with a minor deceleration via the "DC braking" function.

Parameter

Address	Name / setting range / [default setting]	Information
0x2B80	Current for DC-injection braking 0.00 ... [**0.00**] ... 500.00 A	Braking current for DC-injection braking

12.4.2 Short-circuit braking

The control modes for synchronous motors provide the opportunity to use "short-circuit braking" for braking.

The effect of short-circuit braking on the deceleration behaviour depends on the motor properties, the effective cable length, the load inertia and the initial speed value (starting point). Primarily, short-circuit braking serves to transform a part of the kinetic energy into heat energy which unburdens external brake assemblies and limit position dampers.

In some constellations it is not possible to decelerate the speed of a synchronous motor to zero by means of "short-circuit braking"!

Compared to the "quick stop" function, the braking effect is considerably lower.

Preconditions

If short-circuit braking shall be used as the only deceleration means, it is recommended that the feasibility is previously verified by means of tests. For this purpose, short-circuit braking can be triggered in the application via bit 6 in the Lenze control word 0x2830. The oscilloscope function of the engineering tool (e.g. »EASY Starter«) serves to record the following important parameters:

- Actual velocity 0x606C
- Phase current U, V, W 0x2D83:002 ... 0x2D83:004

Details

The short-circuit current adjusts itself freely in accordance with the motor voltage (kE * speed) and the internal resistance of the system. Thus, it is absolutely necessary that the ampacity of the servo inverter is based on the maximum expected short-circuit current. Guide value: I_{max_device} (3 s) ≥ 1.5 * Imax_motor (according to data sheet / catalog) In case the assignment differs, a rating based on the currently possible parameters (max. speed, max. motor current, field weakening, etc.) is required!

The function can be used as follows:

1. "Short-circuit braking" can be parameterised via bit 6 in the Lenze control word 0x2830 if
   - the braking energy cannot be converted into heat in a brake resistor.
   - e.g. an error has been detected in the encoder system which does not permit a braking via quick stop.
2. "Short-circuit braking" can be parameterised as a response to minor faults.
   - Due to an encoder error, for instance, a quick stop might not be possible anymore.

12.4.3 Holding brake control

This device function is used for low-wear control of the motor holding brake connected to the inverter with a supply voltage of 24 V.

The motor holding brake is connected to X106. It is supplied with 24 V via X107.

12.4.3.1 Basic setting

The following parameters must be set for the activation and basic configuration of the holding brake control.

Details

The following settings are possible:

- Brake mode ①
- For the automatic operation: ②
  - Brake release time and brake application time
  - Torque feedforward control
- Test Brake control ③
- Brake polarity ④

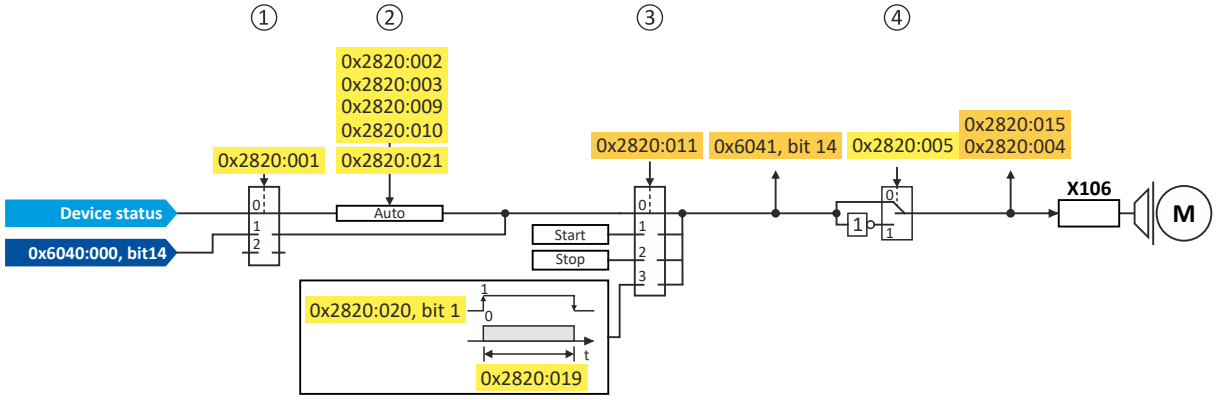

Diagnostic parameters:

- Display status of the automatic brake identification: 0x2820:004
- Display signal of the brake logic before the inversion: 0x6041
- Display status of the holding brake: 0x2820:015

Brake mode

Possible settings: 0x2820:001

- Manual control via the control word. Das control word depends on the technology application :
  - Technology application CiA 402: 0x6040 Bit 14
  - Speed Control technology application: 0x5030:010 Bit 14
  - 0: Close holding brake
  - 1: Release holding brake
- Control via device state machine (automatic operation):
  - The holding brake is controlled as a function of the device state.
  - A torque feedforward control is possible.

The torque is precontrolled for one second. During this time, the actual torque must have reached 90 % of the setpoint torque, otherwise an error is triggered.

  - Response times of the holding brake during release and application can be compensated for.

In the event of an error or when STO ("SafeTorqueOff") is activated, the brake is applied immediately without considering the set brake application time. The inverter immediately changes to the switch-on disabled state.

- No brake connected (off):
  - holding brake control, automatic brake identification and brake monitoring are deactivated.

Brake polarity

The control logic of the holding brake can be inverted.

Parameter

Address	Name / setting range / [default setting]		Information
0x2820:001	Holding brake control: Brake mode		Selecting how the "Release holding brake" command is to be triggered.
	0	Automatically (via device state)	Automatic operation: depending on the device state, the "Release holding brake" command is given automatically if the controller is to be enabled.
	1	Manually	Depending on the TA, the "Release holding brake" command can also be initiated by the following external triggers: TA Cia: ▸ 0x6040 bit 14 TA Speed Control: bit 10
	2	**Off**	The holding brake is deactivated.
0x2820:002	Holding brake control: Brake closing time 0 ... [**100**] ... 10000 ms		Application time (engagement time) of the holding brake. • Only effective in automatic operation.
0x2820:003	Holding brake control: Brake opening time 0 ... [**100**] ... 10000 ms		Release time (disengagement time) of the holding brake. • Only effective in automatic operation.
0x2820:004	Holding brake control: Brake detection • Read only		When 0x2825 = 4 (Manual control mode) and the device state changes from "switched-on" to "operation enabled", it is detected automatically whether a holding brake is connected. The brake identification is repeated after every controller enable.
	0	Detection not started	
	1	Detection running	
	2	No brake detected	
	3	Brake detected	
0x2820:005	Holding brake control: Brake polarity		The control logic of the holding brake can be inverted.
	0	**Normal**	
	1	Inverted	
0x2820:006	Holding brake control: Brake error response		Selection of the response for holding brake monitoring. In the triggered state, the holding brake is monitored cyclically for the presence of brake current. After the brake is connected, the establishment of the brake current is subject to a time delay in accordance with the inductance. Consequently, there is a slight delay in detecting wire breakage, a terminal short-circuit or a missing brake supply. The response set here occurs when monitoring is triggered. **Note:** The brake is not monitored unless it is triggered.
	0	No response	▸ Severity 🕮 574
	1	**Fault > CiA402**	
	2	Warning	
0x2820:015	Holding brake control: Brake status • Read only		Display of the holding brake status. • The status is also displayed via bit 14 in the CiA status word 0x6041.
	0	Brake closed	Holding brake is applied.
	1	Brake released	Holding brake is released.
0x2820:019	Holding brake control: Brake opening time test signal 0 ... [**500**] ... 10000 ms		Setting of the brake opening time when the test signal is transmitted (Brake control word bit 0 = 1).

Address	Name / setting range / [default setting]		Information
0x2820:023	Holding brake control: Control configuration		Selection of which output signal is to be used to control the holding brake.
	0	**Via internal brake module**	The holding brake is controlled via the internal brake module and the brake output X106. • The presence of the external 24 V supply for the brake output is monitored. • An open-circuit detection is active. • A parameterized voltage reduction is active.
	1	Via external module at X106	The brake output X106 controls a relay or power contactor which switches the brake supply.
	2	Via external module at DIx	The holding brake is controlled via the trigger "Release holding brake [115]". • This trigger must be assigned to a digital output. The digital output in turn controls a relay or power contactor which switches the brake supply. • The digital output is not suitable for direct control of a holding brake! • If, instead of an electrically releasing (self-holding) holding brake, an electrically holding (self-releasing) holding brake is to be controlled, a signal inversion must be set for the digital output used! ▸ Configure digital outputs 302

Further setting options:

- Manual brake control 244

12.4.3.2 Brake holding load

Parameter

Address	Name / setting range / [default setting]	Information
0x2820:013	Holding brake control: Holding load ramptime 0 ... [**0**] ... 1000 ms	By setting a ramp time, a vibration stimulation can be reduced that might be caused by the brake holding load .

12.4.3.3 Torque feedforward control

Parameter

Address	Name / setting range / [default setting]		Information
0x2820:009	Holding brake control: Starting torque source		Setting of the source for the holding brake starting torque.
	0	Last torque saved	The stopping value saved automatically during the last closing operation is used as starting torque.
	1	**Torque in 0x2820:010**	The parameterised starting torque is used (0x2820:010).
0x2820:010	Holding brake control: Starting torque -3276.8 ... [**0.0**] ... 3276.7 %		Setting of the feedforward control value for the automatic operation (0x2820:009 = 1).
0x2820:021	Holding brake control: Detected actual torque • Read only: x.x %		Display of the torque actual value that is used for the feedforward control. 0x2820:009 = 0

12.4.3.4 Manual brake control

The holding brake can be opened or closed manually regardless of its operating status and the operating state of the inverter. This function can be used, for example. to move the axis manually in the event of an error.

Note for inverters with Extended Safety:

Manual brake control is only possible if no error is active in the Extended Safety.

Details

The following settings are possible:

- Open the holding brake:
  - The holding brake remains open until it closed again manually.
- Close the holding brake.
- Release the holding brake for a fixed time by a start signal and then apply it automatically:
  - Time for "Brake released": 0x2820:019
  - Start signal: 0x2820:020, bit 0 = 1
  - After the time has elapsed → bit 0 = 0

Parameter

Address	Name / setting range / [default setting]		Information
0x2820:011	Holding brake control: Override of the brake control		Mode for override or forced opening/closing of the holding brake irrespective of the operating mode. In the event of an error and activated function for forced opening, the brake is not applied.
	0	**No override active**	Mode for override or forced opening/closing of the holding brake irrespective of the operating mode.
	1	Open brake	• In the event of an error and activated function for forced opening, the brake is not applied.
	2	Close brake	
	3	Test pulse	
0x2820:020	Holding brake control: Brake control word 0x00 ... [**0x00**] ... 0xFF		Control word for the holding brake.
	Bit 0	Transmit test signal	

12.4.3.5 Reduction of brake supply voltage

Parameter

Address	Name / setting range / [default setting]		Information
0x2820:022	Holding brake control: Holding brake supply voltage		
	75	Reduction on	
	100	**No reduction**	

12.5 Options for optimizing the control loops

The option to be selected depends on the respective application. Depending on the selected option, different procedures become active and thus different parameter groups are influenced:

- Rated motor data
- Inverter characteristic
- Motor equivalent circuit diagram data
- Motor controller settings
- Speed controller settings
- Position controller settings

12.5.1 Automatic motor identification (energized)

Parameter

Address	Name / setting range / [default setting]		Information
0x2832	Identification status • Read only		Display of the status for the automatic identification of the motor parameters.
	Bit 0	Identification enabled	Parameters for interaction with engineering tools.
	Bit 1	Identification active	
	Bit 2	Identification completed	
	Bit 3	Identification failed	
0x2DE0:009	Motor identification settings • Read only		Setting for motor identification.

12.5.2 Tuning of the motor and the speed controller

The following describes in general how to optimize the speed controller. This may be required if some parameters on the load side of the drive system have changed or have not been set yet, such as:

- Motor moment of inertia
- Load moment of inertia
- Type of coupling between motor moment of inertia and load moment of inertia

Preconditions

All rated motor data is known and set in the inverter, either by selecting the motor from the motor catalogue or manually.

▸ Select motor from motor catalog 📖 44
▸ Manual setting of the motor data 📖 46

Required steps

Adapt the following parameters to your drive system using the engineering tool. Since this only changes load-dependent data, the other parameter groups do not need to be calculated again.

In the engineering tool, the speed control settings can be confirmed via the **Initialise** button.

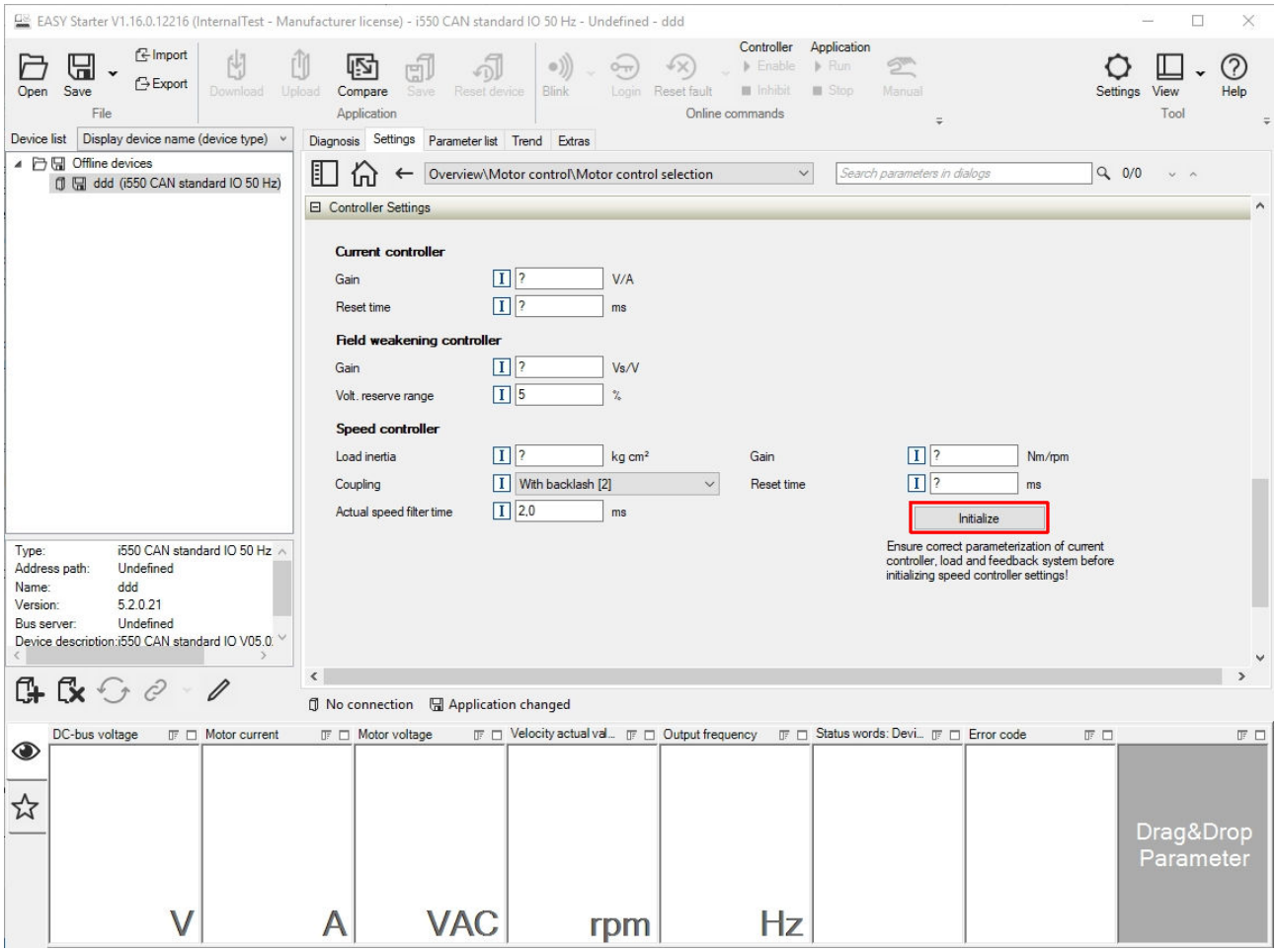

Parameter

Address	Name / setting range / [default setting]	Information
0x2910:001	Inertia settings: Motor moment of inertia 0.00 ... [**0.14**] ... 20000000.00 kg cm²	Setting of the moment of inertia of the motor, relating to the motor.
0x2910:002	Inertia settings: Scaled load inertia 0.00 ... [**0.00**] ... 20000000.00 kg cm²	Setting of the moment of inertia of the load. • Always adjust the setting to the current load, otherwise the optimisation process for the speed controller cannot be executed successfully.

Address	Name / setting range / [default setting]	Information
0x2910:003	Inertia settings: Coupling	Selection of the type of coupling between the moment of inertia of the motor and that of the load.
	0 **Stiff**	
0x2910:004	Inertia settings: Mechanical natural frequency 0.0 ... [**0.0**] ... 250.0 Hz	Setting of the mechanical natural frequency.
0x2910:005	Inertia settings: Load moment of inertia (elastic coupled) 0.00 ... [**0.00**] ... 20000000.00 kg cm²	Setting of the load moment of inertia with elastic coupling (0x2910:003 = 1).

For further details on the speed controller, see chapter "Speed controller". 📖 253

12.5.3 Inverter characteristic

The settings made can be seen if required, but should not be changed. A wrong setting may influence the control negatively!

12.5.3.1 Compensating for inverter influence

Conditions for the execution

- The motor may be stalled.
- The inverter is switched on and error-free.

Response of the motor during performance

If the motor is not braked, the motor will move slightly

Disabling the inverter serves to abort the started procedure any time if required. Already determined characteristic values are rejected in this case.

How to detect the inverter characteristic:

1. Disable the servo inverter.
2. Change to the "inverter characteristic: identification" operating mode. ▸ 0x2825 = 8
3. Enable the servo inverter.

The procedure starts.

After the successful completion, the inverter is automatically disabled and the points of the detected inverter characteristic are set in parameter 0x2947t.

1. Save the changed settings.
2. The inverter characteristic must only be detected again if the servo inverter, the motor or the motor cable have been replaced.
3. The inverter disable set by the procedure can be deactivated via the control word. ▸ 0x6040 = 7

Parameter

Address	Name / setting range / [default setting]	Information
0x2947:001	Inverter characteristic: Value y1 0.00 ... [**0.00**] ... 20.00 V	The inverter characteristic (consisting of 17 values) is calculated and set in the course of the automatic inverter characteristic identification. Note! Changing these values is not recommended by the manufacturer.
0x2947:002	Inverter characteristic: Value y2 0.00 ... [**0.00**] ... 20.00 V	
0x2947:003	Inverter characteristic: Value y3 0.00 ... [**0.00**] ... 20.00 V	
0x2947:004	Inverter characteristic: Value y4 0.00 ... [**0.00**] ... 20.00 V	
0x2947:005	Inverter characteristic: Value y5 0.00 ... [**0.00**] ... 20.00 V	
0x2947:006	Inverter characteristic: Value y6 0.00 ... [**0.00**] ... 20.00 V	
0x2947:007	Inverter characteristic: Value y7 0.00 ... [**0.00**] ... 20.00 V	
0x2947:008	Inverter characteristic: Value y8 0.00 ... [**0.00**] ... 20.00 V	
0x2947:009	Inverter characteristic: Value y9 0.00 ... [**0.00**] ... 20.00 V	
0x2947:010	Inverter characteristic: Value y10 0.00 ... [**0.00**] ... 20.00 V	
0x2947:011	Inverter characteristic: Value y11 0.00 ... [**0.00**] ... 20.00 V	
0x2947:012	Inverter characteristic: Value y12 0.00 ... [**0.00**] ... 20.00 V	
0x2947:013	Inverter characteristic: Value y13 0.00 ... [**0.00**] ... 20.00 V	
0x2947:014	Inverter characteristic: Value y14 0.00 ... [**0.00**] ... 20.00 V	
0x2947:015	Inverter characteristic: Value y15 0.00 ... [**0.00**] ... 20.00 V	

Address	Name / setting range / [default setting]	Information
0x2947:016	Inverter characteristic: Value y16 0.00 ... [**0.00**] ... 20.00 V	
0x2947:017	Inverter characteristic: Value y17 0.00 ... [**0.00**] ... 20.00 V	

In the event of an error

If an error occurs during the procedure or the pulse inhibit gets active (e.g. due to short-time undervoltage), the procedure is terminated with inverter disable without the settings being changed.

12.5.3.2 Extended settings for identification

For determining the characteristic, the current controller is automatically parameterised at the start of the identification process. In case of motors with a very low stator leakage inductance (< 1 mH), the automatic parameterisation can fail and the actual identification process is aborted with an error message such as "short circuit".

- For this case, it is possible to set the current controller manually via the 0x2942 parameter.
- The 0x2DE0:001 parameter serves to select whether the current controller should be calculated automatically or the values in 0x2942 are effective.

Parameter

Address	Name / setting range / [default setting]	Information
0x2DE0:001	Current controller identification settings	Whether the current controller shall be adapted automatically for the identification or set manually, is selected via: • 0x2942:001 (Gain) • 0x2942:002 (Reset time)
	0 Automatic	
	1 Manuell (0x2942)	
0x2DE0:003	Resolver - position detection dynamics 20 ... [**100**] ... 100 %	Setting of the dynamics for the resolver evaluation. • 100% ≡ max. dynamics • <100% ≡ reduced dynamics
0x2DE0:004	Resolver - 8 kHz safety signal	Usually ,the Der 8-kHz carrier frequency is only activated for the safety version. This parameter can also be used to switch it on and off.
	0 Automatisch durch Gerätetyp	
	1 On	
	2 Aus	
0x2DE0:007	Use measured voltage	Activation of voltage measurement. Only for devices for which voltage measurement is possible.
	0 Aus	
	1 On	

12.5.3.3 Load standard inverter characteristic

If none or only one faulty inverter characteristic could be determined, a device-typical standard inverter characteristic can be loaded.

How to load the standard inverter characteristic:

1. **Axis commands: load standard-Lh saturation characteristic** 0x2822:022 = start 1.
2. After completing the procedure, save the inverter characteristic set in in the inverter.

   The »EASY Starter« serves to save the parameter setting of the inverter as parameter file (*.gdc). ▸ Saving the parameter settings

Parameter

Address	Name / setting range / [default setting]	Information
0x2822:022	Axis commands: Load default inverter characteristic	Parameters for interaction with engineering tools.
	0 Off/Ready	
	1 On/Start	
	2 In progress	
	3 Action cancelled	
	4 No access	
	5 No access (Device disabled)	

12.5.4 Motor equivalent circuit diagram data

The motor equivalent circuit diagram data is automatically set when the motor is selected from the motor catalogue:

▸ Select motor from motor catalog 🕮 44

If you use a motor of a different manufacturer, you must adapt the data, e. g. from the motor data sheet according to the sizes and units mentioned if required.

Parameter

Address	Name / setting range / [default setting]	Information
0x2C01:002	Motor parameters: Stator resistance 0.0000 ... [**13.5000**] ... 125.0000 Ω	General motor data. Carry out settings as specified by manufacturer data/motor data sheet. Note! When you enter the motor nameplate data, take into account the phase connection implemented for the motor (star or delta connection). Only enter the data applying to the connection type selected.
0x2C01:003	Motor parameters: Stator leakage inductance 0.000 ... [**51.000**] ... 500.000 mH	
0x2C01:009	Motor parameters: Insulation class	Insulation class of the motor (see motor nameplate).
	0 Y (cut-off temperature = 90 °C)	
	1 A (cut-off temperature = 105 °C)	
	2 E (cut-off temperature = 120 °C)	
	3 B (cut-off temperature = 130 °C)	
	4 F (cut-off temperature = 155 °C)	
	5 H (cut-off temperature = 180 °C)	
	6 G (cut-off temperature > 180 °C)	
0x2C02:001	Motor parameter (ASM): Rotor resistance 0.0000 ... [**0.0000**] ... 214748.3647 Ω	Equivalent circuit data required for the motor model of the asynchronous machine.
0x2C02:002	Motor parameter (ASM): Mutual inductance 0.0 ... [**0.0**] ... 214748364.7 mH	
0x2C02:003	Motor parameter (ASM): Magnetising current 0.00 ... [**0.00**] ... 500.00 A	
0x2C03:001	Motor parameter (PSM): Back EMF constant 0.0 ... [**41.8**] ... 100000.0 V/1000rpm	Voltage induced by the motor (rotor voltage / 1000 rpm). For permanently excited synchronous motors, the e.m.f. constant describes the r.m.s. value of the line-to-line voltage (phase voltage) induced in idle state by the motor (reference: 1000 rpm, 20 °C). Measured: Line to Line (L - L)
0x2C03:002	Motor parameter (PSM): Resolver pole position -179.9 ... [**-90.0**] ... 179.9 °	Equivalent circuit data required for the motor model of the synchronous machine.
0x2C03:003	Motor parameter (PSM): Magnets temperature coefficient (kTN) -1.000 ... [**-0.110**] ... 0.000 %/°C	
0x2C03:004	Motor parameter (PSM): Encoder pole position -179.9 ... [**0.0**] ... 179.9 °	

12.5.5 Motor control settings

12.5.5.1 Automatic optimizing using auto-tuning

With the auto-tuning function, you can optimize speed controllers and position controllers within a very short time. The often tedious manual process is no longer required.

Preconditions

- Auto-tuning is a commissioning function. It may only be operated under observation.
- Auto-tuning only perform without payload.
- Carry out auto-tuning with suspended loads only starting from the lower travel range end position.

Details

How to perform auto-Tuning in the "EASY Starter":

Preconditions

- Inverter and engineering PC with installed "EASY Starter" are connected.
- The "EASY Starter" is open and connected to the inverter.
- The settings for motor, encoder, brakes and kinematics are correct.

1. Open the "Settings" → "Optimization" dialog.
2. Set the profile parameters for the auto-tuning movement. (❶❷❸)
3. Click "Start".
   The auto-tuning movement starts.

NOTICE

Too much vibration of the mechanics during the auto-tuning movement

Possible consequences: Damage of the mechanics.

► Stop auto-tuning immediately if the mechanics start to vibrate strongly.

After approx. 1 minute, the speed controller and position controller are optimized.

The result is displayed at the bottom of the dialog.

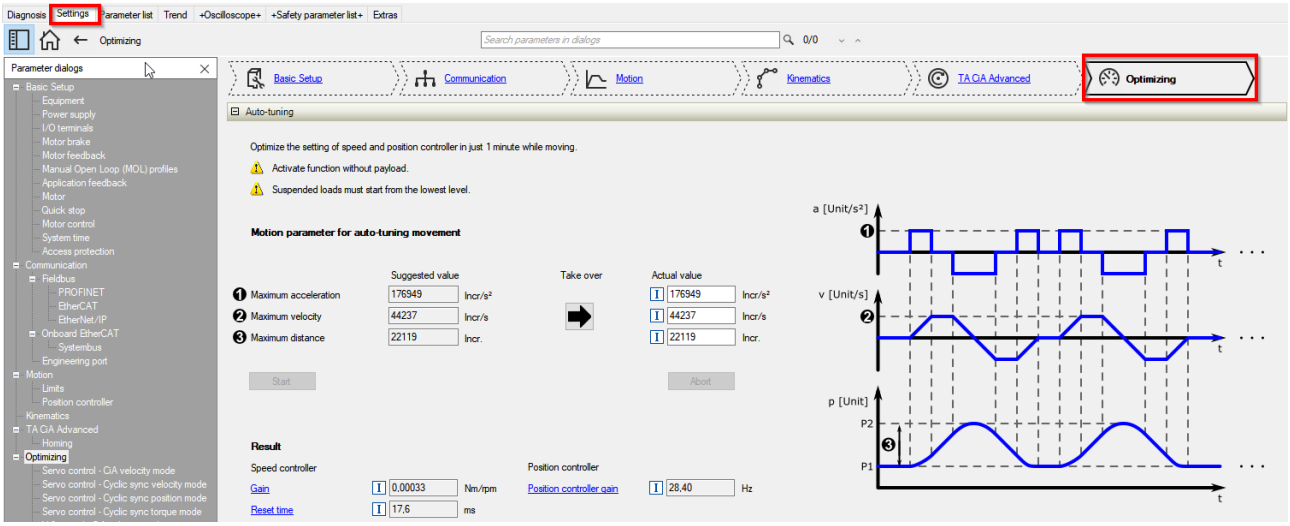

12.5.5.2 Speed controller

The speed controller is automatically set when the motor has been selected from the motor catalogue:

▸ Select motor from motor catalog 🕮 44

The automatically calculated settings for the speed controller enable an optimal control behaviour for typical load requirements.

Manual post-optimisation of the speed controller

1. Setting of the gain

   Set the proportional gain V_p in parameter 0x2900:001.

   a) Specify speed setpoint.
   b) Increase parameter until the drive gets unstable (observe engine noise). ▸ 0x2900:001
   c) Reduce parameter until the drive runs stable again. ▸ 0x2900:001
   d) Reduce the parameter to approx. half the value. ▸ 0x2900:001

2. Setting of the reset time

   Set the reset time T_n in parameter 0x2900:002.

   a) Reduce parameter until the drive gets unstable (observe engine noise). ▸ 0x2900:002
   b) Increase parameter until the drive runs stable again. ▸ 0x2900:002
   c) Increase parameter to approx. double the value. ▸ 0x2900:002

3. Setting of the rate time

   Set the rate time T_d in parameter 0x2900:003.

   a) Increase parameter during operation until an optimal control mode is achieved. ▸ 0x2900:003

Automatically calculated settings for the speed controller

We recommend a manual post-optimisation for the optimal operation.

The function for automatically calculating the gain and reset time is executed via the parameter 0x2822:014.

The following equations apply to a "rigid" system.

- For elastic systems and systems with batches, the determined gain must be reduced.
- The moment of inertia required for the calculation is the sum of the moment of inertia of the motor and the load mass inertias transformed to the motor side.

Equation for calculating the gain

$$V_p = \frac{J}{a \times \left(T_{filter} + T_{current\ controller}\right)} \times \frac{2\pi}{60}$$

Equation for calculating the reset time

$$T_n = a^2 \times \left(T_{filter} + T_{current\ controller} \right)$$

rotating field frequencyrotating field frequencyrotating field frequencyParameter	Symbol	Description	Dimension unit
0x2900:001	V_p	Speed controller gain	Nm / rpm
-	J	Moment of inertia = J_{motor} + sum (J_{load})	kgm^2
-	a	Measure for the phase reserve (recommendation: a = 4≡ 60° phase reserve)	
0x2904	T_{Filter}	Filter time constant - actual speed value	s
-	$T_{current\ controller}$	Equivalent time constant of the current control loop = 0.0005 s	s
0x2900:002	T_n	Reset time - speed controller	s

Special case of the linear motor

In this case, a re-calculation from a linear system to a rotary system must be made. Therefore, via the feedback system a degree of freedom results for the determination of the number of pole pairs. For a rotary system, the number of pole pairs specifies the ratio of electrical and mechanical revolution, the number of encoder increments being defined via one mechanical revolution. In the case of a linear system, the user is free to decide for which length he or she wants to specify the number of encoder increments. Usually, the number of increments is given for a pole distance or for the total length of the linear scale. If the number of increments = "number of increments for one pole distance" is selected, a motor with the number of pole pairs zp = 1 is created. The effective moment of inertia for a linear motor can be calculated according to the following equations. With this J value, the equations shown above can be used to calculate the speed controller gain and reset time.

Equation for calculating the effective moment of inertia

$$J = m \times \left(\frac{zp \times 2 \times \tau_{pole\ pair}}{2\pi} \right)^2$$

$$zp = integer \times \frac{s}{2 \times \tau_{pole\ pair}}$$

Parameter	Symbol	Description	Dimension unit
-	s	Length on which the specification for the number of encoder increments is based (e.g. per pole distance or total length).	m
-	$2\ \tau_{Pole\ pair}$	Pole distance of the permanent magnets, pole pair width	m
-	J	Moment of inertia = J_{Forcer} + J_{Slide} + J_{Load}	kgm^2
-	m	Moving mass = m_{Forcer} + m_{Slide} + m_{Load}	kg

Parameter

Address	Name / setting range / [default setting]	Information
0x2900:001	Speed controller settings: Gain 0.00000 ... [**0.00033**] ... 20000.00000 Nm/rpm	Gain factor Vp of the speed controller.
0x2900:002	Speed controller settings: Reset time 1.0 ... [**17.6**] ... 6000.0 ms	Reset time Ti of the speed controller.
0x2900:003	Speed controller settings: Rate time 0.00 ... [**0.00**] ... 3.00 ms	Setting of the rate time for the speed controller.
0x2901	Speed controller gain adaption 0.00 ... [**100.00**] ... 200.00 %	Mappable parameter for adaptive adjustment of the speed controller gain.
0x2902	I component load value -1000.0 ... [**0.0**] ... 1000.0 %	Setting of the load value.
0x2903	Speed setpoint filter time 0.0 ... [**0.0**] ... 50.0 ms	Time constant for the speed setpoint filter.

Address	Name / setting range / [default setting]	Information
0x2904	Actual speed filter time 0.0 ... [**0.3**] ... 50.0 ms	Time constant for the actual speed value filter.

12.5.5.3 Current controller

The current controller consists of a direct-axis current controller and a cross current controller which are both parameterised identically. The direct-axis current controller controls the field-producing current (D current). The cross current controller controls the torque-producing current (Q current).

Description of the function

The function controls the control cycle. The following model parameters are improved.

- Inductance of the saturation characteristic
- Setpoint step-change in the small signal behavior

This correspond to the maximum possible dynamics of the current controller and increases the stability limit of the higher-level control loops. The higher-level control loops are the position control and the speed control. The setpoint step-changes are compensated within half a PWM cycle.

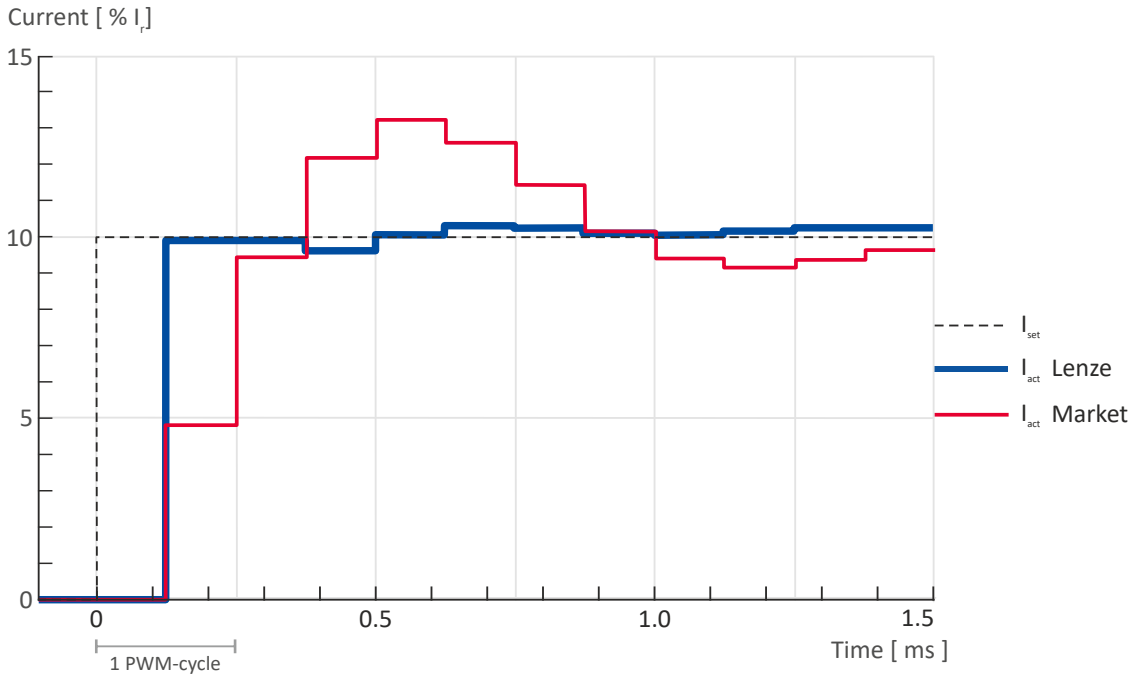

Fig. 59: Characteristic with and without torque control

Activation of the function

The function is activated via a parameter. 0x2941 ▸ 0x2941

In case of synchronous machines, this parameter is set by default to Enable [1] and in case of asynchronous machines to Disable [0].

How to activate the function

1. Set parameter to [2].

The function is activated.

For a servo control, the current controller should always be optimized if a motor of another manufacturer with unknown motor data is used! For a V/f characteristic control, the current controller only has to be optimized if voltage vector controlActivate voltage vector control (Imin controller) is used, or if the motor functions “DC braking” or “flying restart process” are activated.

Automatically calculated settings for the current controller

If one of the values calculated exceeds the upper object limit, the value is limited to the limit value.

There is a coupling between the two control loops (direct-axis current controller, cross current controller) which makes every actuation of a controller occur as fault in the control loop of the other controller. This coupling can be compensated by activating the current controller feedforward control via object 0x2941.

For the automatic calculation of the two controller parameters (gain and reset time), the "Calc. current contr. param."function is provided via object 0x2822:013. The calculation function is based on the stator resistance 0x2C01:002 and the stator leakage inductance 0x2C01:003. Thus, these motor parameters must be parameterized before, e. g. by the manual entry of data sheet values. The calculated controller parameters can be optimized by means of an experimental adjustment subsequently. The procedure is described in sectionManual "current pulse" test mode 📖 295

Equations for calculating the gain and reset time of the synchronous motor

Gain	Reset time
$V_p = \frac{L_{ss}}{T_{dead\ time}}$	$T_n = \frac{L_{ss}}{R_s}$

Parameter	Symbol	Description	Dimension unit
0x2942:001	V_p	Current controller gain	V/A
0x2C01:003	L_{ss}	Stator leakage inductance	H
-	$T_{Dead\ time}$	Equivalent time constant for the analog detection and scanning = 0.0002016 s	s
0x2942:002	T_n	Current controller reset time	s
0x2C01:002	R_s	Stator resistance (value at 20° C)	Ω

Equations for calculating the gain and reset time of the asynchronous motor

Gain	Reset time
$V_p = \frac{\sigma \times L_s}{T_{dead\ time}} \approx \frac{2 \times L_{ss}}{T_{dead\ time}}$	$\tau_n = \frac{\sigma \times L_s}{R_s} \approx \frac{2 \times L_{ss}}{R_s}$

Parameter	Symbol	Description	Dimension unit
0x2942:001	V_p	Current controller gain	V/A
-	σ	Leakage	
-	L_s	Motor stator inductance	H
0x2C01:003	L_{ss}	Motor stator leakage inductance	H
-	$T_{Dead\ time}$	Equivalent time constant for the analog detection and scanning = 0.0002016 s	s
0x2942:002	T_n	Current controller reset time	s
0x2C01:002	R_s	Motor stator resistance (value at 20° C)	Ω

Debugging

The function depends on the saturation characteristic of the inductances in parameter 0x2c04 0x2c04.

For Lenze motors, this characteristic can be found in the motor table. In case of MCS motors, the characteristic values in the first 2 entries are too high. If there are any problems regarding

the torque control, reduce these values. Lenze motors with the standard setting achieve a considerable higher performance.

In the following parameter, debugging is possible with the commissioning function **Man. Test mode curr. Imp.**. 0x2825 ▸ 0x2825

This function is documented. Here, the transient response of the current controller can be evaluated which shall considerably improve when the torque control is activated.

The following chart shows the this behavior.

- Red characteristic without torque controller
- Yellow characteristic with activated torque controller

If the course is worse with an activated torque control, the parameters of the inductance and saturation profile are faulty.

Parameter

Address	Name / setting range / [default setting]		Information
0x2941	Current controller feedforward control		Activate/deactivate feedforward control. Since the actuation of the current controller is known, they can be precontrolled to increase the actuations of the current controller. Note! For a feedforward control, the Motor equivalent circuit diagram data must be known. If only estimated values are available, we recommend you not to activate the feedforward control.
	0	**Disable**	
	1	Enable	
	2	Dead-beat control	
0x2942:001	Current controller parameters: Gain 0.00 ... [**148.21**] ... 750.00 V/A		Gain factor Vp of the current controller.
0x2942:002	Current controller parameters: Reset time 0.01 ... [**3.77**] ... 2000.00 ms		Reset time T_n of the current controller.
0x2943	Current setpoint filter time 0.00 ... [**0.00**] ... 10.00 ms		Setting of the setpoint current filter time.

Example

Applications with torque control with a switching frequency of 4 kHz reach the same dynamics as applications with 16 kHz without torque control. The stability limit of the speed controller increases depending on the switching frequency and filter setting by up to 100 %. Typical values are in the range of 30 % - 50 %. In case of applications that have already been solved with the previously found settings, an activation is not necessary.

12.5.5.4 ASM field controller

For motors with great rotor time constants or small rotor resistances, very high gain factors are calculated. Since the setting range of the field controller is limited to the double rated magnetising current, the field control loop in the case of these motors tends to a two-point response when the values calculated are entered.

The automatic calculation is made via the parameter 0x2822:016 = 1.

Starting from a calculated gain factor of approx. 1000 A/Vs, do not set the full value anymore.

Example

Calculated value: 10000 A/Vs

Setting: 3000 A/Vs

Calculation of the gain

$$V_p \approx \frac{1}{4 \times R_r \times T_{\text{current controller}}}$$

Calculation of the reset time

$$T_n = T_r = \frac{L_r}{R_r}$$

Parameter	Symbol	Description	Dimension unit
0x29C0:001	V_p	Field controller gain	A/Vs
0x29C0:002	T_n	Field controller reset time	s
0x2C02:002	L_h	Mutual motor inductance (ASM)	H
0x2C02:001	R_r	Motor rotor resistance (ASM)	Ω
-	$T_{\text{current controller}}$	Equivalent time constant of the current control loop = 0.0005 s	
-	T_r	Motor rotor time constant	
-	K_{Path}	Gain of the control path	
-	L_r	Motor rotor resistance (ASM)	H

Parameter

Address	Name / setting range / [default setting]	Information
0x29C0:001	Field controller settings: Gain 0.00 ... [**165.84**] ... 50000.00 A/Vs	Gain factor Vp of the field controller.
0x29C0:002	Field controller settings: Reset time 1.0 ... [**15.1**] ... 6000.0 ms	Reset time Tn of the field controller.

12.5.5.5 ASM field weakening controller

Since the controlled system gain changes with the speed, the field weakening controller is corrected via the speed.

The automatic calculation is made via the parameter 0x2822:017 = 1.

Calculation of the gain

$$V_p = 0, \quad V_{\text{controlled system\_Fs}} = p \times n_{eck} \times \frac{2\pi}{60}$$

Calculation of the reset time

$$T_n = 4 \times \frac{V_{\text{controlled system\_Fs}}}{60} \times \left(T_{EF} + T_{filter}\right), \quad T_{EF} = T_r = \frac{L_r}{R_r} \approx \frac{L_h + L_{ss}}{R_r}$$

Parameter	Symbol	Description	Dimension unit
0x29E0:001	V_p	Gain of the field weakening controller	Vs / A
-	V_{Path_Fs}	Gain of the control path	
-	P	Number of pole pairs	rpm
-	$n_{transition}$	Speed at which the field weakening is approximately initiated.	
0x29E0:002	T_n	Reset time of the field weakening controller	s
-	T_{EF}	Filter time constant of the field control loop	
0x29E3	T_{Filter}	Filter time constant for the required voltage	s
-	T_r	Motor rotor time constant	
-	L_r	Motor rotor resistance (ASM)	
0x2C02:002	L_h	Mutual motor inductance (ASM)	H
0x2C01:003	L_{ss}	Motor stator leakage inductance (ASM) or motor leakage inductance (SM)	H
0x2C02:001	R_r	Motor rotor resistance	Ω

Parameter

Address	Name / setting range / [default setting]	Information
0x29E0:001	Field weakening controller settings: Gain (ASM) 0.000 ... [**0.000**] ... 2147483.647 Vs/V	Gain factor Vp of the field weakening controller.
0x29E0:002	Field weakening controller settings: Reset time (ASM) 1.0 ... [**2000.0**] ... 240000.0 ms	Reset time Tn of the field weakening controller.
0x29E1	Field weakening controller Field limitation 5.00 ... [**100.00**] ... 100.00 %	Field limitation of the field weakening controller.

12.5.5.6 ASM field weakening controller (extended)

For a quick commissioning, the calculations and settings are made automatically during the optimisation.

Parameter

Address	Name / setting range / [default setting]	Information
0x29E2	DC-bus filter time 1.0 ... [**25.0**] ... 1000.0 ms	Filter time for the current DC-bus voltage used for field weakening.
0x29E3	Motor voltage filter time 1.0 ... [**25.0**] ... 1000.0 ms	Filter time for the current motor voltage used for field weakening.
0x29E4	Voltage reserve range 1 ... [**5**] ... 20 %	Voltage reserve at the transition point to the field weakening, with reference to the current value of the DC-bus voltage. Only relevant for: • Servoregelung (SC-PSM) (0x2C00 = 1) • Servo control (SC ASM) (0x2C00 = 2)

12.5.5.7 PSM operation outside the voltage range

The inverter control enables a synchronous motor to be operated outside the voltage range. If a motor is selected in the »EASY Starter«, the control is parameterised automatically.

Improve the transition from the base speed range to field weakening by activating the **current controller: feedforward control** parameter. ▸ 0x2941

- The current controller precontrol is defined via the following parameters:
  - Motor parameter: stator resistance ▸ 0x2C01:002
  - Motor parameter: stator leakage inductance ▸ 0x2C01:003
  - Motor parameter (PSM): back EMF constant ▸ 0x2C03:001
- If you want to operate a third-party motor in the field weakening range, you have to determine the parameters previously mentioned

Operation of synchronous motors outside the voltage range:

If pulse inhibit is set in the inverter, e.g. in case of an inverter disable or an error, the DC bus is loaded in accordance with the current speed (see equation).

• At high speed and outside the voltage range, the terminal voltage can be higher than the mains voltage!

• In order to prevent the DC bus from being loaded impermissibly high, connect a brake chopper to the DC bus!

The terminal voltage corresponds to the following equation

$$U_K = n \times \frac{U_N}{n_M}$$

V_K	Terminal voltage
n	Speed
V_{rated}	Rated mains voltage
n_m	Rated motor voltage

- Mains settings: rated mains voltage ▸ 0x2540:001
- Motor parameter: rated speed ▸ 0x2C01:004

Delaying the buildup of field weakening

With the default setting (5 %), field weakening is initiated, thus ensuring that a punctual buildup of the field weakening current shortly before the voltage threshold is reached.

In the case of synchronous motors, setting the **Voltage reserve range** parameter may bring about a delayed start of field weakening for synchronous machines, e.g in order to slightly reduce the thermal load of the motor. ▸ 0x29E4

12.5.5.8 Imax controller

Defining the behaviour at the current limit (Imax controller)

The maximum output current or the current limit is defined by the 0x6073 "max. current" parameter. In case of the V/f characteristic control, an Imax controller is implemented for complying with this limit. If the motor current exceeds the set maximum current, the Imax controller is activated.

- The Imax controller changes the rotating field frequency so that the motor current does not exceed the current limit. In motor mode, the frequency is reduced and in generator mode it is increased.
- The gain and reset time of the Imax controller can be parameterised.

Optimising the Imax controller

The automatic calculation serves to determine starting parameters of the Imax controller which are sufficient for many applications. Thus, an optimisation is not required for most of the applications.

The automatic calculation is made via the parameter 0x2822:019 = 1.

The parameters of the Imax controller must be adapted if

- a power control is implemented with great moments of inertia.

  Recommendation:

  Step 1: increase reset time in ▸ 0x2B08:002

  Step 2: reduce gain in ▸ 0x2B08:001
- vibrations occur with V/f characteristic control during the operation of the Imax controller.

  Recommendation:

  Step 1: increase reset time in ▸ 0x2B08:002

  Step 2: reduce gain in ▸ 0x2B08:001
- overcurrent errors occur due to load impulses or too high acceleration/deceleration ramps.

  Recommendation:

  Step 1: reduce reset time in ▸ 0x2B08:001

  Step 2: increase gain in ▸ 0x2B08:002

Parameter

Address	Name / setting range / [default setting]	Information
0x2B08:001	V/f Imax controller: Gain 0.000 ... [**0.001**] ... 1000.000 Hz/A	Gain factor Vp of the Imax controller.
0x2B08:002	V/f Imax controller: Reset time 1.0 ... [**100.0**] ... 2000.0 ms	Reset time Ti of the Imax controller.

12.5.5.9 Flying restart controller

Parameter

Address	Name / setting range / [default setting]	Information
0x2BA1	Flying restart circuit 0 ... [**15**] ... 100 %	

12.5.5.10 Position controller

Equation for calculating the gain

The automatic calculation is made via the parameter 0x2822:015 = 1.

$$V_p = \frac{1}{32 \times T_{sum}}, \quad T_{sum} = T_{filter} + T_{current\ controller}$$

Parameter	Symbol	Description	Dimension unit
0x2980	V_p	Position controller gain	Hz
0x2985:001 ... 0x2985:011	$V_p(n)$	Speed-dependent V_p adaptation	
0x2904	T_{Filter}	Filter time constant - actual speed value	s
-	$T_{current\ controller}$	Equivalent time constant of the current control loop = 0.0005 s (500 µs)	s

Instability of the position control loop due to too high dynamic performance of the speed controller

The following countermeasure must be taken if the following error cannot be reduced to acceptable values while setting the position controller:

1. Reduce speed controller by the factor 2 and slowly increase the position controller until it gets slightly unstable again.
2. Reduce the position controller slightly and increase the speed controller until the position control loop gets slightly unstable again.
3. Repeat these steps until the following error is reduced to acceptable values.

Parameter

Address	Name / setting range / [default setting]	Information
0x2980	Position controller gain 0.00 ... [**28.40**] ... 10000.00 Hz	Setting of the position controller gain.
0x2981	Position controller gain adaption 0.00 ... [**100.00**] ... 200.00 %	Setting of the percentage adaptation for the position controller gain.
0x2982	Position controller output signal limitation 0.00 ... [**480000.00**] ... 480000.00 rpm	Setting of the output signal limitation.
0x2983	Actual position start value -2147483647 ... [**0**] ... 2147483647 inc	Specifying a new actual position.
0x2984	Mode for setting the actual position	Selection of the mode for setting or shifting the actual position.
	0 **Absolute**	Actual position = Actual position start value (0x2983)
	1 Relative	Actual position = actual position + Actual position start value (0x2983)
0x2986	Resulting gain adaption • Read only: x.xx %	Display of the resulting gain after being adapted.

12.6 Fine adjustment of the motor model

The further commissioning steps are only required for servo controls if more stringent requirements with regard to the torque linearity have to be met. During the commissioning process of Lenze motors, typical values for the relevant parameters are provided. For motors of other manufacturers, these values are to be requested from the motor manufacturer, or they have to be estimated.

12.6.1 Correction of the stator leakage inductance (Lss)...

...and the current controller parameters by means of the saturation characteristic

For the most part, the electrical characteristics of the motor are the relevant factors for an optimal current controller setting (Vp, Ti), especially the stator resistance and the stator leakage inductance (Lss). However, modern motors have their stator leakage inductance changed along with the current level so that it is impossible to have an optimal current controller setting for all working points at all times.

For applications with operating phases that involve very different current and torque requirements and, at the same time, high requirements on dynamic drive behaviour, the i700 servo inverter provides the possibility of the correction of the stator leakage inductance and the current controller settings by means of the adjustable saturation characteristic.

The saturation characteristic is a typical characteristic of motors of one type/size. It does not depend on the maximum process current of the motor in the prevailing application. Thus the defined values should be based on the key data of the motors. These are rated motor current, peak motor current for a limited time and the ultimate motor current.

NOTICE

Impact of the saturation characteristic on the current controller feedforward control

► The saturation characteristic is not only used to correct the current controller, but it also influences the current controller feedforward control (can be activated via parameter 0x2941).

The following picture shows a typical saturation characteristic of an MCS motor:

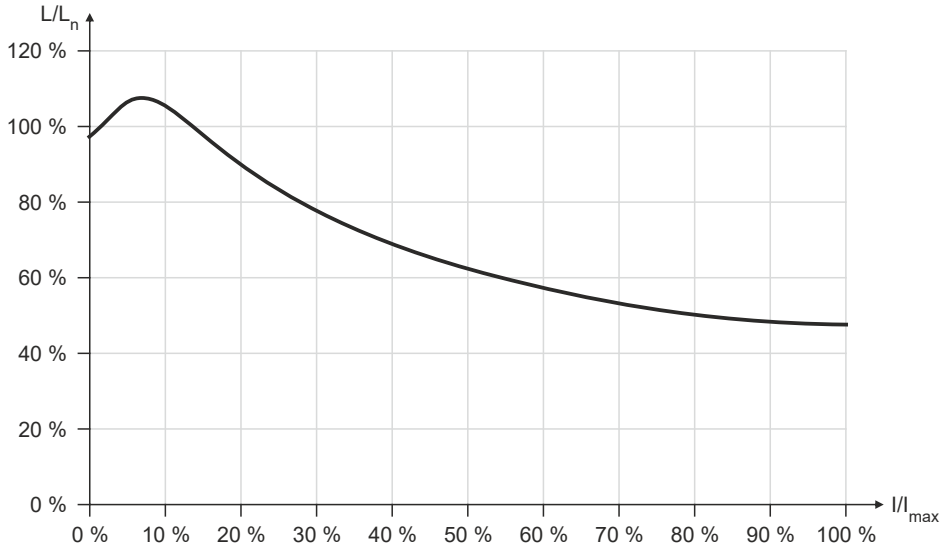

The saturation characteristic represents the change in inductance (L/Ln) as a function of the motor current (I/Imax). The variables of both axes which were scaled to a reference value are represented as percentages.

- When a Lenze motor is selected, the saturation characteristic is already filled with values typical of the series.

Distribution of the grid points

- The saturation characteristic is represented by 17 grid points.
- The 17 grid points are spaced on the X axis at equal intervals (equidistantly) in a range of 0 ... 100 %. The 100% value of the X axis refers to the current value (max. motor current in the process) set in parameter 0x2C05.
- The y values for the grid points can be accessed via the subindices of parameter .

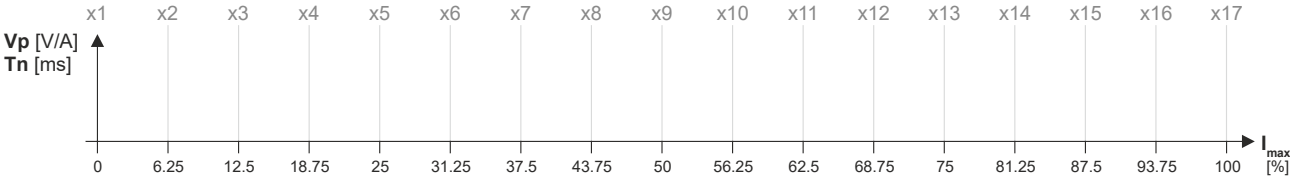

- The 100 % value of a grid point refers to
  - the set motor stator leakage inductance 0x2C01:003 and
  - the set current controller gain V_p 0x2942:001.
- Preferably select a display area of the grid points which includes at least the ultimate motor current. The current controller step response is then recorded actively only until the grid point with peak motor current. In order to prevent the motor winding from being overloaded, use the manual test mode "current pulse" for recording: ▸ Manual "current pulse" test mode. 🕮 295
- The grid points with current setpoints above the peak motor current are determined through interpolation.
- When the saturation characteristics for motor types are determined, it makes sense in some cases to select a scaled representation of the grid point distribution. This requires to know the highest value of the quotient from "ultimate motor current / rated motor current" of the motor series.

Example of determining the saturation characteristic

Given values:

- Rated motor current: 5 A
- Maximum motor current: 20 A
- Maximum process current: 15 A

Proceeding

1. Deactivate correction: Set all subindices (0x2C04:001 ... 0x2C04:017) to 100 %.
2. Use 0x2C05 to set the maximum current up to which the motor is to be operated in the process (in this example "15 A").
3. Adjust the current controller with different current setpoints by means of the manual test mode Manual "current pulse" test mode and take down the corresponding settings for Vp and Tn.
   - The procedure is described in section Manual "current pulse" test mode.
   - The current setpoints to be set for the corresponding adjustment in object 0x2835:001 result from the scaling of the maximum process current to the X axis of the saturation characteristic.
   - The grid points which are required to define the saturation characteristic with a sufficient quality varies from motor to motor and thus has to be determined individually.
   - For this example, currents that are part of the grid points 5, 9, 13, and 15 have been selected, and a measurement at rated motor current was carried out additionally:

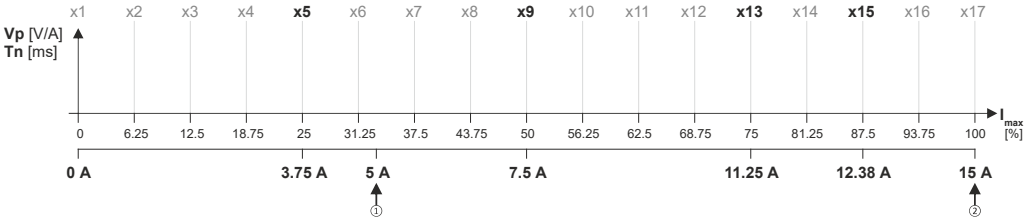

   See table "Specifications for adjustment / measured values" after this listing
4. Create a characteristic based on the detected values for Vp (but do not enter any values in yet).
   - Determine the values of the grid points that have not been adjusted by interpolation between two values.
   - **Note:** This example assumes that the inductance does not change considerably below 3.75 A. For this reason, the same Vp value that resulted from the measurement with a motor current of 3.75 A was used for all grid points below 3.75 A.

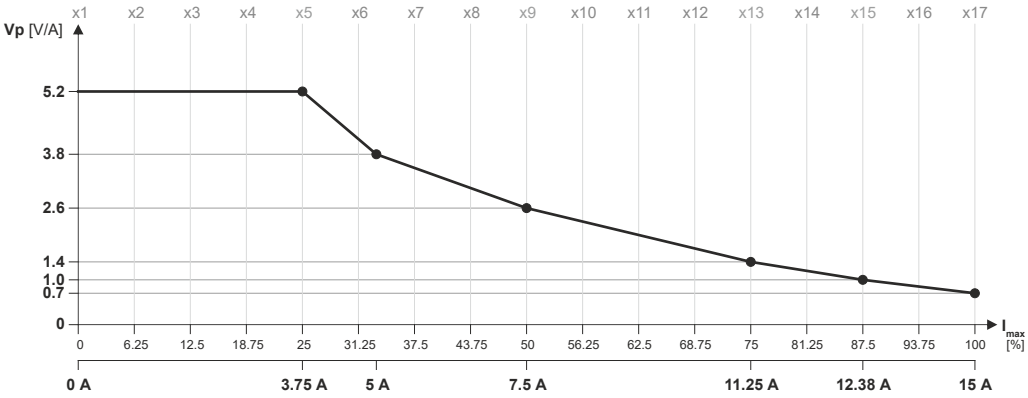

5. Set gain Vp and reset time Tn to the values that were determined during the adjustment with the rated motor current (in this example "5 A"):
   - 0x2942:001 is set to "3.8 V/A".
   - 0x2942:002 is set to "5 ms".
6. Scale Vp values on the Y axis of the characteristic to the Vp setting "3.8 V/A":

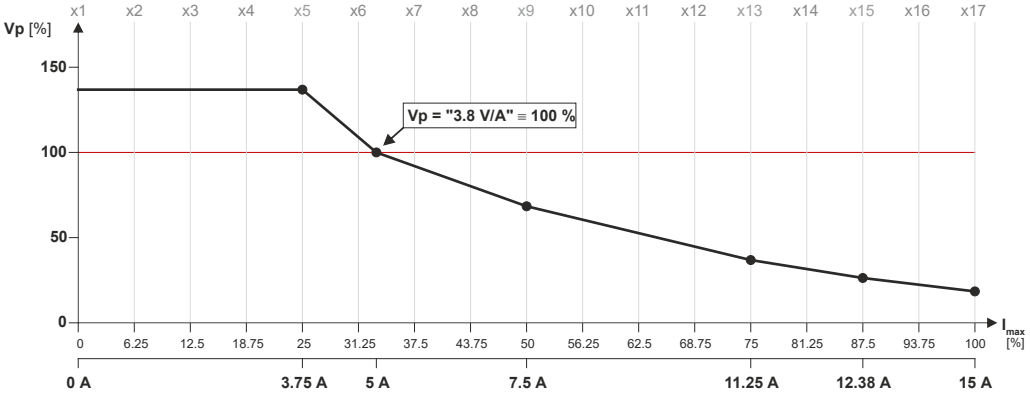

7. Enter the percentage Vp values of the grid points into the subindices (0x2C04:001 ... 0x2C04:017):

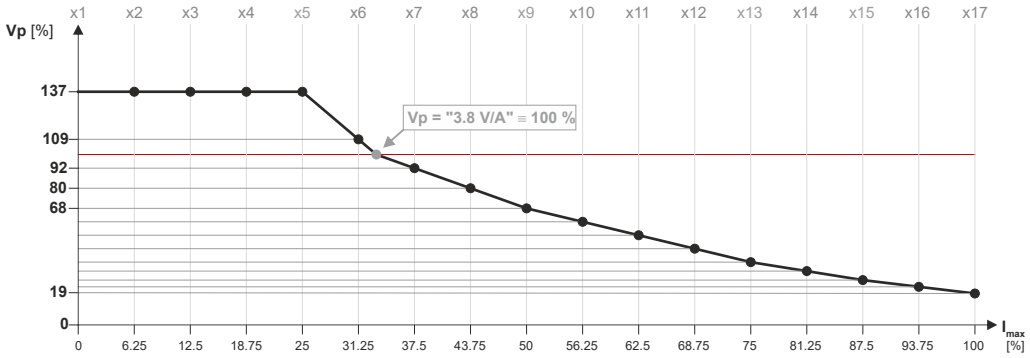

   See table "Setting of grid point 1 ... 17 in [%]" after this listing

8. Enter the maximum process current ("15 A") in 0x6073 as the maximum current.
   - The settings made should now cause the same basic current characteristic irrespective of the current level.
   - Now that the current controller gain is actively corrected, the step responses may slightly differ from the previous measurements. In this case, the current controller parameters must be post-optimised for the last time.
9. For permanent storage: save the characteristic determined.

   The »EASY Starter« serves to save the parameter settings of the inverter as parameter file (*.gdc). Saving the parameter settings

Specifications for adjustment			Measured values	
Grid point	**Scaling**	**Current setpoint**	**Vp [V/A]**	**Tn [ms]**
5	0.25 * 15 A =	3.75 A	5.2	6.5
9	0.5 * 15 A =	7.5 A	2.6	4
13	0.75 * 15 A =	11.25 A	1.4	2.5
15	0.875 * 15 A =	12.38 A	1.0	2
17	1.0 * 15 A =	15 A	0.7	1.7
Rated motor current=		5 A	3.8	5

Setting of grid point 1 ... 17 in [%]															
y1	**y2**	**y3**	**y4**	**y5**	**y6**	**y7**	**y8**	**y9**	**y10**	**y11**	**y12**	**y13**	**y14**	**y15y**	**y16**	**y17**
137	137	137	137	137	109	92	80	68	61	53	45	37	32	26	22	19

Parameter

Address	Name / setting range / [default setting]	Information
0x2C04:001	d-axis Lss saturation characteristic: y1 = L01 (x = 0.00 %) 0 ... [**165**] ... 400 %	Saturation characteristic of the leakage inductance. The linear distribution via the current results from the maximum motor current (0x2C05).
0x2C04:002	d-axis Lss saturation characteristic: y2 = L02 (x = 6.25 %) 0 ... [**200**] ... 400 %	
0x2C04:003	d-axis Lss saturation characteristic: y3 = L03 (x = 12.50 %) 0 ... [**146**] ... 400 %	
0x2C04:004	d-axis Lss saturation characteristic: y4 = L04 (x = 18.75 %) 0 ... [**117**] ... 400 %	
0x2C04:005	d-axis Lss saturation characteristic: y5 = L05 (x = 25.00 %) 0 ... [**97**] ... 400 %	
0x2C04:006	d-axis Lss saturation characteristic: y6 = L06 (x = 31.25 %) 0 ... [**82**] ... 400 %	
0x2C04:007	d-axis Lss saturation characteristic: y7 = L07 (x = 37.50 %) 0 ... [**71**] ... 400 %	
0x2C04:008	d-axis Lss saturation characteristic: y8 = L08 (x = 42.75 %) 0 ... [**62**] ... 400 %	
0x2C04:009	d-axis Lss saturation characteristic: y9 = L09 (x = 50.00 %) 0 ... [**55**] ... 400 %	
0x2C04:010	d-axis Lss saturation characteristic: y10 = L10 (x = 56.25 %) 0 ... [**50**] ... 400 %	
0x2C04:011	d-axis Lss saturation characteristic: y11 = L11 (x = 62.50 %) 0 ... [**46**] ... 400 %	
0x2C04:012	d-axis Lss saturation characteristic: y12 = L12 (x = 68.75 %) 0 ... [**43**] ... 400 %	
0x2C04:013	d-axis Lss saturation characteristic: y13 = L13 (x = 75.00 %) 0 ... [**42**] ... 400 %	
0x2C04:014	d-axis Lss saturation characteristic: y14 = L14 (x = 81.25 %) 0 ... [**41**] ... 400 %	
0x2C04:015	d-axis Lss saturation characteristic: y15 = L15 (x = 87.50 %) 0 ... [**41**] ... 400 %	
0x2C04:016	d-axis Lss saturation characteristic: y16 = L16 (x = 93.25 %) 0 ... [**41**] ... 400 %	
0x2C04:017	d-axis Lss saturation characteristic: y17 = L17 (x = 100.00 %) 0 ... [**41**] ... 400 %	
0x2C04:018	d-axis Lss saturation characteristic: Activation Lss saturation characteristic 0 Adjustment off **1 Adjustment on**	Switch on/off the correction by means of saturation characteristic.
0x2C05	Reference for current grid points (x) Lss saturation characteristic 0.0 ... [**5.4**] ... 500.0 A	Setting of the maximum motor current. Serves as reference value for the scaled current data of the X axis of the saturation characteristic.

12.6.2 Synchronous motor (SM): Compensate temperature and current influences

The properties of the permanent magnets of permanently excited synchronous motors depend on the temperature and the amperage. The relationship between motor current and resulting torque changes correspondingly.

The influences of the temperature and the amperage on the magnetisation can be taken into account by the motor control and hence be compensated for.

- To compensate for the temperature dependence of the magnets, the temperature coefficient (kT) of the permanent magnet must be entered in object 0x2C03:003 (linear characteristic).
- To compensate for the current dependence of the magnets, multiple grid points of a characteristic must be entered in the following object (non-linear characteristic):

Parameter

Address	Name / setting range / [default setting]	Information
0x2C06:001	Grid points for magnet characteristic (current): x1 = i01/iN 0 ... [**0**] ... 1000 %	Characteristic for the dependency of the magnetic flux on the active motor current.
0x2C06:002	Grid points for magnet characteristic (current): y1 = kT01/kTN 0 ... [**100**] ... 1000 %	
0x2C06:003	Grid points for magnet characteristic (current): x2 = i02/iN 0 ... [**100**] ... 1000 %	
0x2C06:004	Grid points for magnet characteristic (current): y2 = kT02/kTN 0 ... [**100**] ... 1000 %	
0x2C06:005	Grid points for magnet characteristic (current): x3 = i03/iN 0 ... [**200**] ... 1000 %	
0x2C06:006	Grid points for magnet characteristic (current): y3 = kT03/kTN 0 ... [**100**] ... 1000 %	
0x2C06:007	Grid points for magnet characteristic (current): x4 = i04/iN 0 ... [**415**] ... 1000 %	
0x2C06:008	Grid points for magnet characteristic (current): y4 = kT04/kTN 0 ... [**72**] ... 1000 %	

12.6.3 Asynchronous motor (ASM): Identifying Lh saturation characteristic

In case of an asynchronous motor, the relationship between current and torque is basically determined by the saturation behaviour of the mutual inductance. If the achieved torque accuracy, especially in the field weakening range should not be sufficient, the accuracy can be increased by the individual identification of the saturation characteristic. This behaviour can be measured by the servo inverter.

Conditions for the execution

- Before this commissioning function is executed, the inverter characteristic and the motor parameters must be identified ▸ Motor equivalent circuit diagram data. 🕮 251
- The motor may be stalled.
- The inverter is error-free and in "Switched on" device state.

Response of the motor during "standstill" performance

How to identify the L_h saturation characteristic:

The identification of the L_h saturation characteristic can take up to 11 minutes.

1. If the servo inverter enabled, disable it ▸ Disable operation. 🕮 317
2. Select the drive mode [10] in parameter 0x2825: Lh saturation characteristic identification
3. Enable the inverter to start the process.
   - Check the progress in 0x2823:002.
   - Disabling the inverter serves to abort the started procedure any time if required. Already determined characteristic values are rejected in this case.

After successful completion...

...the inverter will be disabled automatically and the points of the determined L_h saturation characteristic are set in the parameters 0x2C07:001 ... 0x2C07:017.

- Save the changed settings.

  The »EASY Starter« serves to save the parameter settings of the servo inverter as parameter file (*.gdc). ▸ Saving the parameter settings 🕮 39
- The inverter disable set automatically by the procedure can be deactivated again via the CiA402 control word 0x6040 (setting = 7, 15).

In the event of an error

If an error occurs during the procedure or the pulse inhibit gets active (e.g. due to short-time undervoltage), the procedure is terminated with inverter disable without the settings being changed.

Load standard L_h saturation characteristic

If an incorrect L_h saturation characteristic has been determined or none at all, it is possible to load a standard L_h characteristic.

How to load the standard L_h saturation characteristic:

1. The start is made via the parameter 0x2822:021 = 1.
2. For permanent storage: after the process has been completed, save the L_h saturation characteristic set in .

   The »EASY Starter« serves to save the parameter settings of the inverter as parameter file (*.gdc). Saving the parameter settings

Parameter

Address	Name / setting range / [default setting]	Information
0x2822:021	Axis commands: Load default Lh saturation characteristic	Parameters for interaction with engineering tools.
	0 Off/Ready	
	1 On/Start	
	2 In progress	
	3 Action cancelled	
	4 No access	
	5 No access (Device disabled)	
0x2C07:001	Inductance grid points (y) Lh saturation characteristic: y1 = L01 (x = 0.00 %) 0 ... [**118**] ... 400 %	Saturation characteristic of the mutual inductance of an asynchronous machine as a function of the magnetising current.
0x2C07:002	Inductance grid points (y) Lh saturation characteristic: y2 = L02 (x = 6.25 %) 0 ... [**118**] ... 400 %	
0x2C07:003	Inductance grid points (y) Lh saturation characteristic: y3 = L03 (x = 12.50 %) 0 ... [**118**] ... 400 %	
0x2C07:004	Inductance grid points (y) Lh saturation characteristic: y4 = L04 (x = 18.75 %) 0 ... [**117**] ... 400 %	
0x2C07:005	Inductance grid points (y) Lh saturation characteristic: y5 = L05 (x = 25.00 %) 0 ... [**116**] ... 400 %	
0x2C07:006	Inductance grid points (y) Lh saturation characteristic: y6 = L06 (x = 31.25 %) 0 ... [**114**] ... 400 %	
0x2C07:007	Inductance grid points (y) Lh saturation characteristic: y7 = L07 (x = 37.50 %) 0 ... [**111**] ... 400 %	
0x2C07:008	Inductance grid points (y) Lh saturation characteristic: y8 = L08 (x = 43.75 %) 0 ... [**107**] ... 400 %	
0x2C07:009	Inductance grid points (y) Lh saturation characteristic: y9 = L09 (x = 50.00 %) 0 ... [**100**] ... 400 %	
0x2C07:010	Inductance grid points (y) Lh saturation characteristic: y10 = L10 (x = 56.25 %) 0 ... [**93**] ... 400 %	
0x2C07:011	Inductance grid points (y) Lh saturation characteristic: y11 = L11 (x = 62.50 %) 0 ... [**86**] ... 400 %	
0x2C07:012	Inductance grid points (y) Lh saturation characteristic: y12 = L12 (x = 68.75 %) 0 ... [**78**] ... 400 %	
0x2C07:013	Inductance grid points (y) Lh saturation characteristic: y13 = L13 (x = 75.00 %) 0 ... [**71**] ... 400 %	
0x2C07:014	Inductance grid points (y) Lh saturation characteristic: y14 = L14 (x = 81.25 %) 0 ... [**64**] ... 400 %	
0x2C07:015	Inductance grid points (y) Lh saturation characteristic: y15 = L15 (x = 87.50 %) 0 ... [**57**] ... 400 %	
0x2C07:016	Inductance grid points (y) Lh saturation characteristic: y16 = L16 (x = 93.75 %) 0 ... [**50**] ... 400 %	
0x2C07:017	Inductance grid points (y) Lh saturation characteristic: y17 = L17 (x = 100.00 %) 0 ... [**42**] ... 400 %	

12.6.4 Estimate optimum magnetising current

In case of the given L_h saturation behaviour, there is (usually) a magnetising current where the torque efficiency is highest. This magnetising current can be determined by the servo inverter.

- Executing this function also compresses or extends the L_h saturation characteristic (interpolation points 0x2C07:001 ... 0x2C07:001).
- After the function has been executed, the determined magnetising current is entered in 0x2C02:003.

Preconditions for the performance

- Before this commissioning function is executed, the motor parameters and the L_h saturation characteristic must be identified ▸ Motor equivalent circuit diagram data. 📖 251
- The motor must be stalled.

Response of the motor during "standstill" performance

How to estimate the optimal magnetising current:

1. Start **Axis commands: estimate optimum magnetising current** parameter with = 1. ▸ 0x2822:023
2. After the process has been completed, save the changed inverter parameters:
   - L_h saturation characteristic (0x2C07:001 ... 0x2C07:017)
   - Magnetising current0x2C02:003

   The »EASY Starter« serves to save the parameter settings of the inverter as parameter file (*.gdc). ▸ Saving the parameter settings

Parameter

Address	Name / setting range / [default setting]		Information
0x2822:023	Axis commands: Estimate optimum magnetizing current		Parameters for interaction with engineering tools.
	0	**Off/Ready**	
	1	On/Start	
	2	In progress	
	3	Action cancelled	
	4	No access	
	5	No access (Device disabled)	

12.7 Parameterise filter elements in the setpoint path

12.7.1 Jerk limitation

Via the max. acceleration change that can be set in parameter 0x2945 C00274, the change of the setpoint torque can be limited for jerk limitation. Hence, sudden torque step changes can be avoided. The entire speed characteristic is smoothed.

Parameter

Address	Name / setting range / [default setting]	Information
0x2945	Torque setpoint jerk limitation 0.1 ... [**400.0**] ... 400.0 %	Setting of the maximum acceleration change.

12.7.2 Notch filter (band-stop filter)

Due to the high dynamic performance or limit frequency of the closed current control loop, mechanical natural frequencies can be activated which may lead to an unstable speed control loop in the case of resonance.

To mask out or at least damp these resonant frequencies, two notch filters are integrated in the speed control loop of the inverter. In the Lenze setting, these filters are switched off:

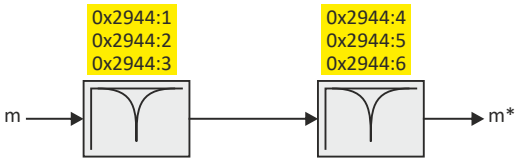

Use of the notch filters depending on the resonant frequency

⚠WARNING!

Improperly set notch filters have a negative impact on the response and disturbance behaviour of the speed control: increased overshoot of the motor speed in case of response behaviour and / or higher speed deviations (extreme case: complete instability of the drive)

In the case of impairment,

► the drive that is still running must either be coasted down by activating the inverter disable or immediately be brought to a standstill via a brake.

► the speed controller must be optimised again afterwards.

► the test procedure must be repeated.

Output frequency	Use of notch filters
0...1/2 $f_{limit\_speed\_controller}$	No
1/2 $f_{limit\_speed\_controller...f\_limit\_speed-Controller}$	yes, with restriction
<$f_{limit\_speed\_controller}$	yes, without restriction

- The notch filters are suitable for use with resonant frequencies equal to or higher than the limit frequency of the speed controller:
  - Resonant frequencies ≥ $f_{limit\_speed\_controller}$ = 70 Hz ... 110 Hz
- For resonant frequencies lower than the limit frequency of the speed controller, the use of suitable speed profiles with an S-shaped ramp is recommended.

Setting the notch filters

Since the exact frequency response of the speed control path in most cases is not known beforehand, an experimental procedure for setting the notch filters is described in the following.

How to set the notch filters:

1. Set and optimise current controller, see section Current controller .📖 256
2. Adapt the speed controller reset time to the filter time constant of the actual speed filter time and the equivalent time constant of the current control loop:
   - The following applies: 0x2900:002 = 16 * (0x2904 + 500 µs)

   Note: The setting of the reset time includes the equivalent time constant of the current control loop. The 500 µs indicated are typical in a power range of up to 50 kW. Above this value, greater time constants may occur.
3. Slowly increase the proportional gain of the speed controller in 0x2900:001 until the speed control loop starts to be unstable (acoustic determination, measurement of the motor current or recording of the speed output signal).
4. Measure the oscillation frequency using an oscilloscope:
   - Assessing the motor current via 0x2DD1:004.
   - Assessing the motor speed via 0x6044.
5. Set the oscillation frequency determined as filter frequency in 0x2944:001.
6. Set the filter width to 40 % of the filter frequency in 0x2944:002.
7. Se the filter depth to 40 dB in 0x2944:003.
   - If "0 dB" is set (default setting), the filter is not effective.
8. Further increase the proportional gain of the speed controller in 0x2900:001 until the speed control loop starts to be unstable again.
   - If the oscillation frequency has changed now, readjust the filter frequency by trimming. The use of a second filter is ineffective here.
   - If the oscillation frequency remains the same, readjust the filter depth and/or the filter width by trimming (the first reduces the amplitude, the second lets the phase rotate faster).
   - Repeat step 8 until the desired behaviour or the limit of a sensible speed controller gain has been reached.
9. Check the drive behaviour in case of quick stop (QSP)
   - Accelerate drive
   - Then, brake with quick stop (QSP) and check whether a reduced drive dynamics can be detected.
   - If so, reduce the influence of the filters until the reachable dynamics corresponds to the requirements.

NOTICE

► Readjust the speed controller after setting the notch filters (see section "Speed controller"). 📖 253

► Save the changed settings.

► The »EASY Starter« serves to save the parameter settings of the servo inverter as parameter file (*.gdc), see section Saving the parameter settings . 📖 39

Parameter

Address	Name / setting range / [default setting]	Information
0x2944:001	Torque setpoint notch filter: Frequency notch filter 1 1.0 ... [**200.0**] ... 2000.0 Hz	Setting of the frequency for notch filter 1.
0x2944:002	Torque setpoint notch filter: Bandwidth notch filter 1 0.0 ... [**20.0**] ... 1000.0 Hz	Setting of the bandwidth for notch filter 1.
0x2944:003	Torque setpoint notch filter: Damping notch filter 1 0 ... [**0**] ... 100 dB	Setting of the damping for notch filter 1.
0x2944:004	Torque setpoint notch filter: Frequency notch filter 2 1.0 ... [**400.0**] ... 2000.0 Hz	Setting of the frequency for notch filter 2.

Address	Name / setting range / [default setting]	Information
0x2944:005	Torque setpoint notch filter: Bandwidth notch filter 2 0.0 ... [**40.0**] ... 1000.0 Hz	Setting of the bandwidth for notch filter 2.
0x2944:006	Torque setpoint notch filter: Damping notch filter 2 0 ... [**0**] ... 100 dB	Setting of the damping for notch filter 2.

12.8 Motor protection

Many monitoring functions integrated in the inverter can detect errors and thus protect the device or motor from being destroyed or overloaded.

12.8.1 Motor overload monitoring (i²xt)

This function monitors the thermal overload of the motor, taking the motor currents recorded and a mathematical model as a basis.

⚠ DANGER!

Fire hazard by overheating of the motor.

Possible consequences: Death or severe injuries

- ► Since the motor utilisation calculated in the thermal model gets lost after mains switching, the following operating states cannot be determined correctly: 1.) Restarting (after mains switching) of a motor that is already very hot and 2.) Change of the cooling conditions (e.g. cooling air flow interrupted or too warm).
- ► To achieve full motor protection, an additional temperature monitoring function with a separate evaluation must be installed.
- ► When actuating motors that are equipped with PTC thermistors or thermal contacts, always activate the PTC input.

Motor overload monitoring is important for motors without thermal sensor.

Details

During the calculation of the parameters 0x2D4D:001 ...0x2D4D:008, the speed dependence of the permissible motor load and thus of the permissible current (difference between the standstill current and rated current is taken into consideration.

In case of permanent overload and excess of the warning threshold set in parameter 0x2D4E, a warning is output in order that the higher-level Controller is still able to respond and reduce the motor load or interrupt the operation.

The calculated thermal motor utilisation is displayed in parameter 0x2D4F.

Parameter

Address	Name / setting range / [default setting]		Information
0x2D4F	Motor utilisation (i²xt) • Read only: x %		Display of the current thermal motor utilisation.
0x2D4E	Motor utilisation (i²xt) - warning threshold 0 ... [**100**] ... 250 %		Setting of the warning threshold for motor overload monitoring.
0x2D50:001	Motor utilisation (i²xt) - monitoring: Error response		For displaying the motor utilisation error response (I²xt). Associated event ID: • 537469777 | 0x20092351 - Motor utilization too high (i²xt)
	0	No response	
	1	**Fehler > CiA402**	

Address	Name / setting range / [default setting]	Information
0x2D50:002	Motor utilisation (i²xt) - monitoring: Error threshold 0 ... [**105**] ... 250 %	Setting of the error threshold for motor overload monitoring.

12.8.1.1 Parameters for the thermal model

The introduction of a two-component model with two time constants (one for the winding and the other for the housing/laminated core) serves to display the thermal behaviour of the motors up to 500% of the rated current.

Structure of the monitoring

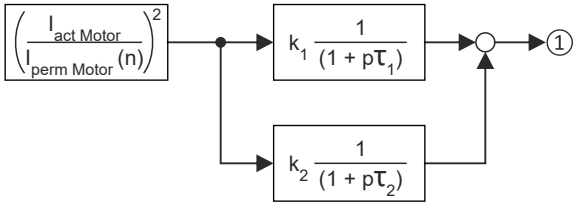

① Thermal utilisation of the motor in [%]

Parameter	Symbol	Description	Dimension unit
-	$I_{actMotor}$	Actual motor current	A
-	$I_{permMotor}$	Permissible motor current (speed-dependent)	A
0x2D4C:001	τ_1	Therm. time constant of winding	s
0x2D4C:002	τ_2	Therm. time constant of laminated core	s
0x2D4C:003	k_1	Percentage of the winding in the final temperature	%
-	k_2	Percentage of the laminated core in the final temperature: k2 = 100 % - k1	%

Calculation with only one time constant

If k1 = "0 %" is set, the part of the winding is not taken into consideration and the thermal model is only calculated using the time constant set for the housing/laminated core. This setting is e.g. required if only the time constant of the laminated core (T2) is known.

Parameter setting of the time constant and the influence of the winding on motors of other manufacturers

When the influence of the winding is activated, the i^2 xt monitoring becomes more sensible as if only the influence of the laminated core would be used for monitoring purposes.

The necessity to activate the influence of the winding rises with the increasing utilisation of the motor overload capacity. It also rises with applications where the motor is at standstill for longer periods or cyclically and a load ≥ permanent standstill current is applied.

For determining the values for the thermal time constant, try to get the data from the motor manufacturer. If this is not possible, you can use the data of a comparable Lenze motor.

Conditions for comparability are similar values in case of the following motor features:

- Square dimensions of the motor (active part)
- Length of the active part (if available)
- Permanent standstill current Io [A_RMS]
- Peak current/overload capacity [A_RMS]
- Copper resistance of the winding at 20 °C [Rphase]

Example:

Motor features	Data of the third-party motor	Description
Square dimension	95 mm	MCS09xxx = 89 mm
Standstill current	2.2 A	MCS09F38 = 3.0 A
Peak current	7.3 A	MCS09F38 = 15 A
Phase resistance	5.1 Ohms	MCS09F38 = 5.2 Ohms

Parameter

Address	Name / setting range / [default setting]	Information
0x2D4C:001	Thermal model motor utilization (i²xt): Motor utilisation (i²xt) 1 ... [**60**] ... 36000 s	Setting of the time constant for the winding.

Address	Name / setting range / [default setting]	Information
0x2D4C:002	Thermal model motor utilization (i²xt): Thermal time constant - laminations 1 ... [**852**] ... 36000 s	Setting of the time constant for the laminated core.
0x2D4C:003	Thermal model motor utilization (i²xt): Winding influence 0 ... [**27**] ... 100 %	Part of the thermal motor model: distribution factor of the copper winding influence.
0x2D4C:004	Thermal model motor utilization (i²xt): Starting value 0 ... [**0**] ... 250 %	Value for initialising the filters for the thermal motor overload monitoring (setting in % of the permissible full load).

12.8.1.2 Speed-dependent evaluation of the motor current

⚠WARNING!

Fire hazard by overheating of the self-ventilated standard motor

Possible consequences: Destruction of system parts

► Protect self-ventilated standard motors especially at low speeds by sufficient cooling or from impermissibly high motor currents. Carry out a speed-dependent evaluation of the permissible motor current.

⚠WARNING!

Fire hazard by overheating of PM synchronous motors

Possible consequences: Destruction of system parts

► Please check for every individual case which r.m.s. value can be used to permanently operate the motor at standstill. In case of some motors, a derating I1/In < 100 % is required when n1/nn = 0 %. This serves to prevent an overload of individual motor phases as their power loss doubles with continuous DC current load. (It is called DC current load as the field frequency amounts to 0 Hz at standstill.)

When you select a Lenze motor from the catalogue and transfer its parameters into the i700 servo inverter a typical characteristic is automatically set for the selected motor. A deviating parameterisation is only required if the motor is operated in ambient conditions which demand a general derating. Example: use in site altitudes > 1000 m. In case of motors of other manufacturers, the operating points have to be parameterised based on the data sheet information.

By selecting a characteristic, the permissible motor current is evaluated depending on speed for calculating the thermal motor utilisation. For this purpose, up to four operating points on the S1 characteristic of a motor can be used.

- The S1 characteristic can be found in the technical data sheet/catalogue of the respective motor.
- The representation in the objects /characteristic is carried out as relative values with reference to rated values.

The speed-dependent evaluation of the permissible motor current can actually be switched off by parameterising all 8 characteristic points to "100 %".

Operating points		
①	Standstill n01-I01	For motors, this operating point is often described with the no-Io values.
②	Reference point n02-I02	If the value falls below the speed n02, a derating in the current is required because: • the motor cooling of self-ventilated motors deteriorates considerably. • a DC current load causes an increased power loss in a winding. • For motors, this operating point is also described with the no-Io values.
③	Rated point (n03=nN)-(I03=IN)	Rated values of the motor are the reference for all operating points of the i^2xt monitoring.
④	Field weakening n04-I04	This operating point should be parameterised irrespective of the use in the current application.

Example of how to enter the characteristic for standard and servo motors

The required data of the operating points result from the S1 characteristic of the prevailing motor:

Examples of S1 characteristics	
Standard motor	
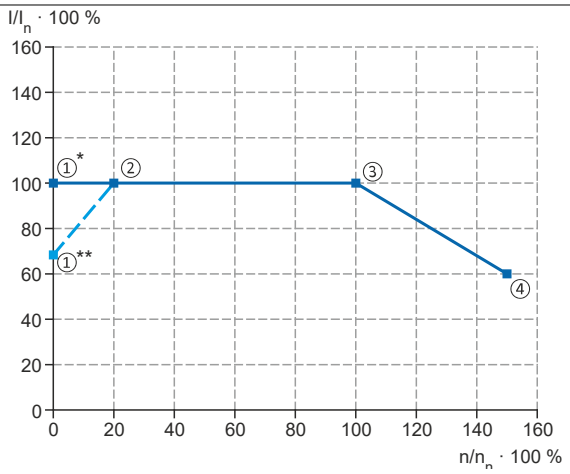	*forced ventilated standard motor **self-ventilated standard motor
Servo motor	Servo motor with derating at standstill
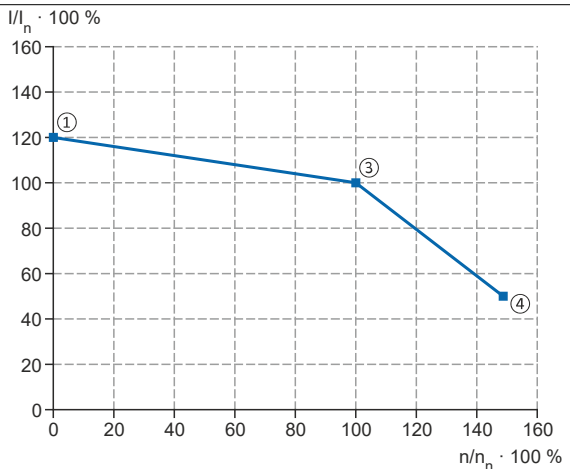	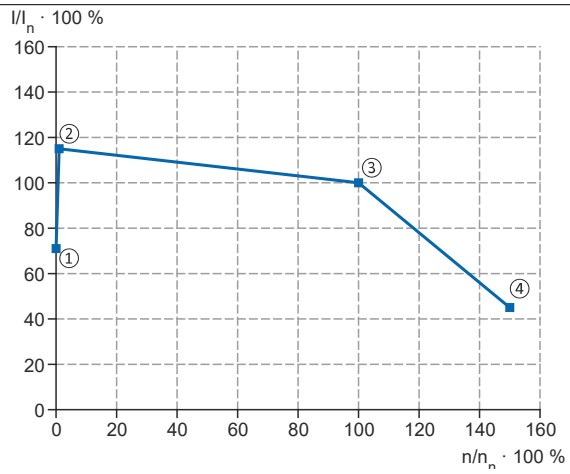

Parameter	Characteristic points		Info
0x2D4D:001	①	n_1/n_n * 100 %	Speed = "0" (standstill)
0x2D4D:002		I_1/I_n * 100 %	Permissible motor current at standstill
0x2D4D:003	②	n_2/n_n * 100 %	Speed from which the current must be reduced for self-ventilated motors. • Below this speed the cooling air flow of the integral fan is not sufficient anymore.
0x2D4D:004		I_2/I_n * 100 %	Permissible motor current at speed n_2 (torque reduction)
0x2D4D:005	③	n_3/n_n * 100 %	Rated speed
0x2D4D:006		I_3/I_n * 100 %	Permissible motor current at rated speed
0x2D4D:007	④	n_4/n_n * 100 %	Speed above the rated speed (in the field weakening range for asynchronous motors)
0x2D4D:008		I_4/I_n * 100 %	Permissible motor current at speed n_4 (field weakening)

Parameter

Address	Name / setting range / [default setting]	Information
0x2D4D:001	Motor utilisation (i²xt) - specific characteristic: x1 = n01/nN (n01 ~ 0) 0 ... [**0**] ... 600 %	User-definable characteristic for speed-dependent evaluation of the motor current.
0x2D4D:002	Motor utilisation (i²xt) - specific characteristic: y1 = i01/iN (x1) 0 ... [**100**] ... 600 %	
0x2D4D:003	Motor utilisation (i²xt) - specific characteristic: x2 = n02/nN (n02 = limit reduced cooling) 0 ... [**0**] ... 600 %	
0x2D4D:004	Motor utilisation (i²xt) - specific characteristic: y2 = i02/iN (x2) 0 ... [**100**] ... 600 %	
0x2D4D:005	Motor utilisation (i²xt) - specific characteristic: x3 = n03/nN (n03 = rated speed) 0 ... [**100**] ... 600 %	
0x2D4D:006	Motor utilisation (i²xt) - specific characteristic: y3 = i03/iN (x3) 0 ... [**100**] ... 600 %	
0x2D4D:007	Motor utilisation (i²xt) - specific characteristic: x4 = n04/nN (n04 = limit field weakening) 0 ... [**100**] ... 600 %	
0x2D4D:008	Motor utilisation (i²xt) - specific characteristic: y4 = i04/iN (x4) 0 ... [**100**] ... 600 %	

12.8.1.3 UL 508-compliant motor overload monitoring

If the operation of the motor requires the compliance with the UL Standard 508, and the UL 508-compliant motor overload monitoring is realised by the mathematical model of the I²xt monitoring, the following conditions must be observed.

UL 508 condition 1:

In case of a motor load of 600 %, the I²xt warning must be output within 20 seconds.

- A motor load of 600 % exists if the r.m.s. value of the total motor current displayed in parameter 0x2DD1:005 corresponds to 600% of the rated motor current 0x6075.

This condition can be fulfilled by setting the following parameters:

- Motor utilisation (I²xt): thermal time constant - laminated core ▸ 0x2D4C:002
- Motor utilisation (I²xt): influence winding ▸ 0x2D4C:003
- Motor utilisation (I²xt): motor overload warning threshold ▸ 0x2D4E
- Motor utilisation (I²xt): response ▸ 0x2D50:001
- Motor utilisation (I²xt): error threshold ▸ 0x2D50:002

UL 508 condition 2:

In case of a motor load of 110 %, the I²xt warning at a motor rotating field frequency of 10 Hz must be output faster than at a motor rotating field frequency of 20 Hz.

- The current motor rotating field frequency is displayed in parameter 0x2DDD.
- A motor load of 110 % exists if the r.m.s. value of the total motor current displayed in parameter 0x2DD1:005 corresponds to 110 % of the rated motor current 0x6075.

This condition can be fulfilled by setting the following parameters:

- I²xt: x1 = n01/nN (n01 ~ 0) ▸ 0x2D4D:001
- I²xt: y1 = i01/iN (x = n01 ~ 0) ▸ 0x2D4D:002
- I²xt: x2 = n02/nN (n02 = reduced cooling limit) ▸ 0x2D4D:003
- I²xt: y2 = i02/iN (x = n02 = reduced cooling limit ▸ 0x2D4D:004

UL 508 condition 3:

After mains switching and a motor load > 100 %, the I²xt warning must be output faster than in the same overload case before mains switching.

- A motor load > 100 % exists if the r.m.s. value of the total motor current displayed in parameter 0x2DD1:005 is higher than the rated motor current 0x6075.

This condition can be fulfilled by setting the following parameters:

- Motor utilisation (I²xt): starting value ▸ 0x2D4C:004

12.8.2 Motor temperature monitoring

In order to record and monitor the motor temperature, a PTC thermistor (single sensor according to DIN 44081 or triple sensor according to DIN 44082) or thermal contact (normally-closed contact) can be connected to the terminals T1 and T2. This measure helps to prevent the motor from being destroyed by overheating.

Preconditions

- The inverter can only evaluate one PTC thermistor! Do not connect several PTC thermistors in series or parallel.
- If several motors are actuated on one inverter, thermal contacts (NC contacts) (TCO) connected in series are to be used.
- To achieve full motor protection, an additional temperature monitoring function with a separate evaluation must be installed.
- By default, a wire jumper is installed between terminals X109/T1 and X109/T2, which must be removed when the PTC thermistor or thermal contact (TCO) is connected.

Details

If 1.6 kΩ < R < 4 kΩ at terminals X109/T1 and X109/T2, the monitoring function will be activated; see functional test below.

- If the monitoring function is activated, the response set in 0x2D49:002 will be effected.
- The setting 0x2D49:002 = 0 deactivates the monitoring function.

If a suitable motor temperature sensor is connected to the terminals X109/T1 and X109/T2 and the response in 0x2D49:002 is set to "Fault [3]", the response of the motor overload monitoring may be set other than "Fault [3]" in .
▸ Motor overload monitoring (i²xt) 278

Functional test

Connect a fixed resistor to the PTC input:

- R > 4 kΩ : The monitoring function must be activated.
- R < 1 kΩ : The monitoring function must not be activated.

Details

If 1.6 kΩ < R < 4 kΩ at terminals X109/T1 and X109/T2, the monitoring function will be activated; see functional test below.

- If the monitoring function is activated, the response set in 0x2D48:002 will be effected.
- The setting 0x2D48:002 = 0 deactivates the monitoring function.

If a suitable motor temperature sensor is connected to the terminals X109/T1 and X109/T2 and the response in 0x2D48:002 is set to "Fault [3]", the response of the motor overload monitoring may be set other than "Fault [3]" in 0x2D4B:003.
▸ Motor overload monitoring (i²xt) 278

Functional test

Connect a fixed resistor to the PTC input (T1/T2):

- R > 4 kΩ : The monitoring function must be activated.
- R < 1 kΩ : The monitoring function must not be activated.

Parameter

Address	Name / setting range / [default setting]		Information
0x2D48:002	PTC temperature sensor monitoring: Error response		Setting of a response for PTC temperature monitoring. Associated event ID: • 537478017 | 0x20094381 - Error - Motor temperature monitoring (PTC)
	0	No response	▸ Severity 574
	1	**Fault > CiA402**	
	2	Warning	

Address	Name / setting range / [default setting]		Information
0x2D49:001	Motor temperature monitoring: Temperature sensor type		Selection of the motor temperature sensor used.
	0	KTY83-110	
	1	KTY83-110+2xPTC 150 °C	
	2	KTY84-130	
	3	Specific characteristic	
	4	Reserved	
	5	**PT1000**	
	6	PT1000+2xPTC 150 °C	
0x2D49:002	Motor temperature monitoring: Response		Selection of the response to the triggering of the motor temperature monitoring. Associated event IDs: • 537477904 | 0x20094310 - Motor overtemperature • 537478016 | 0x20094380 - Fault - Motor temperature sensor • 537478018 | 0x20094382 - Motor overtemperature (load encoder/ master encoder) • 537478019 | 0x20094383 - Motor temperature sensor error (load encoder/master encoder)
	0	No response	▸ Severity 574
	1	**Fault > CiA402**	
0x2D49:003	Motor temperature monitoring: Warning threshold -3276.8 ... [**145.0**] ... 3276.7 °C		Setting of the warning threshold for motor temperature monitoring. The warning threshold is reset with a hysteresis of 5 °C.
0x2D49:004	Motor temperature monitoring: Error threshold -3276.8 ... [**155.0**] ... 3276.7 °C		Setting of the error threshold for motor temperature monitoring The warning threshold is reset with a hysteresis of 5 °C.
0x2D49:005	Motor temperature monitoring: Actual motor temperature • Read only: x.x °C		Display of the current motor temperature.
0x2D49:006	Motor temperature monitoring: Spec. characteristic temperature grid point 1 0.0 ... [**25.0**] ... 255.0 °C		Parameter for the specific thermal sensor characteristic (0x2D49:001 = 3).
0x2D49:007	Motor temperature monitoring: Spec. characteristic temperature grid point 2 0.0 ... [**150.0**] ... 255.0 °C		
0x2D49:008	Motor temperature monitoring: Spec. characteristic resistance grid point 1 0 ... [**1000**] ... 30000 Ω		
0x2D49:009	Motor temperature monitoring: Spec. characteristic resistance grid point 2 0 ... [**2225**] ... 30000 Ω		
0x2D49:010	Motor temperature monitoring: Temperature sensor feedback type		Selection of the thermal sensor relevant for temperature monitoring. Selection [3] motor and load feedback: temperature monitoring responds to the highest of both temperatures of the sensors at slot A and slot B.
	0	**Motor encoder**	
	3	Motor encoder and load encoder	
0x2D49:011	Motor temperature monitoring: Motor temperature (Motor encoder) • Read only: x.x °C		Display of the current motor temperature measured by motor feedback.
0x2D49:012	Motor temperature monitoring: Motor temperature (load encoder) • Read only: x.x °C		Display of the current motor temperature measured by load feedback.
0x2DDF:007	Axis information: Function of X109 • Read only		
	0	None	
	10	HIPERFACE DSL® (OCT)	
	20	PTC	

12.8.2.1 Individual characteristic for motor temperature sensor

The setting of a characteristic for the motor temperature sensor is not suitable as an adequate replacement of a tripping unit for the thermal protection of rotating electrical machines (EN 60947- 8:2013)!

If required, you can define and activate a special characteristic for the motor temperature sensor.

- The special characteristic is activated via the setting 0x2D49:001 = 3
- The special characteristic is defined based on two parameterisable grid points. The two grid points define a line that is extrapolated to the left and to the right.

This default setting can be changed by the following parameters:

- Thermal sensor characteristic: Grid point 1 - temperature ▸ 0x2D49:006
- Thermal sensor characteristic: Grid point 1 - resistance ▸ 0x2D49:008
- Thermal sensor characteristic: Grid point 2 - temperature ▸ 0x2D49:007
- Thermal sensor characteristic: Grid point 2 - resistance ▸ 0x2D49:009

Selecting a motor from the motor catalogue overwrites the parameters of the special characteristic!

12.8.3 Overcurrent monitoring

This function monitors the instantaneous value of the motor current and serves to protect the motor from irreversible damage. Overcurrent monitoring is effective for all motor control modes.

NOTICE

With an incorrect parameterization, the maximum permissible motor current may be exceeded in the process.

Possible consequences: Irreversible damage of the motor

Avoid motor damages by using the overcurrent monitoring function as follows:

► The setting of the threshold for the overcurrent monitoring in 0x2D46:001 must be adapted to the connected motor.

► Set the maximum current of the inverter in 0x6073 much lower than the threshold for overcurrent monitoring for a dynamic limitation of the motor current.

Parameter

Address	Name / setting range / [default setting]		Information
0x2D46:001	Overcurrent monitoring: Threshold 0.0 ... [**5.4**] ... 3000.0 A		• If the active motor current exceeds the set threshold, the response set in 0x2D46:002 is effected for the purpose of motor protection. • The parameter can also be set and overwritten by selecting a motor from the "motor catalog" of the engineering tool.
0x2D46:002	Overcurrent monitoring: Response		Selection of the response to the triggering of motor current monitoring. Associated event ID: • 537469828 | 0x20092384 - Ultimate motor current reached
	0	No response	▸ Severity 🕮 574
	1	**Fault > CiA402**	
	2	Warning	

12.8.4 Motor phase failure detection

The motor phase failure detection function can be activated for both synchronous and asynchronous motors.

In the Lenze setting, monitoring is not activated!

Preconditions

Motor phase failure detection during operation is suitable for applications which are operated with a constant load and speed. In other cases, transient processes or unfavourable operating points can cause erroneous triggering to occur.

Parameter

Address	Name / setting range / [default setting]	Information
0x2D45:001	Motor phase failure detection: Response - Motor phase 1	Selection of the response following the detection of a motor phase failure during operation. Associated event IDs: • 537526025 | 0x2009FF09 - Motor phase missing • 537526026 | 0x2009FF0A - Motor phase failure phase U • 537526027 | 0x2009FF0B - Motor phase failure phase V • 537526028 | 0x2009FF0C - Motor phase failure phase W
	0 **No response**	▸ Severity 574
	1 Fault > CiA402	
	2 Warning	
0x2D45:002	Motor phase failure detection: Current threshold 1.0 ... [**5.0**] ... 10.0 %	• 100 % ≡ Maximum current 0x2DDF:002 • Background: in order to be able to reliably detect the failure of a motor phase, first a certain must flow for the current sensor system. The detection function is therefore only activated if the motor current has exceeded the current threshold set here. • Display of the present motor current: 0x6078.
0x2D45:003	Motor phase failure detection: Voltage threshold 0.0 ... [**10.0**] ... 100.0 V	Voltage threshold for motor phase monitoring for the VFC control mode (0x2C00 = 6). • The monitoring function is triggered if the motor current exceeds the rated motor current-dependent current threshold for longer than 20 ms. Rated motor current 0x6075 • In case of the V/f characteristic control, the voltage threshold is considered additionally for the motor phase failure detection. If the motor voltage is higher than the voltage threshold, monitoring is combined with the motor current.
0x2D45:004	Motor phase failure detection: Response - Motor phase 2	Selection of the response following the detection of a motor phase failure directly after controller enable. Associated event IDs: • 537526025 | 0x2009FF09 - Motor phase missing • 537526026 | 0x2009FF0A - Motor phase failure phase U • 537526027 | 0x2009FF0B - Motor phase failure phase V • 537526028 | 0x2009FF0C - Motor phase failure phase W
	0 **No response**	▸ Severity 574
	1 Fault > CiA402	
	2 Warning	

12.8.5 Motor speed monitoring

This function monitors the motor speed during operation.

Parameter

Address	Name / setting range / [default setting]	Information
0x2D44:001	Overspeed monitoring: Threshold 50 ... [**8000**] ... 50000 rpm	• If the current motor speed reaches the threshold set, the response selected in 0x2D44:002 is effected. • The parameter can also be set and overwritten by selecting a motor from the "motor catalog" of the engineering tool.

Address	Name / setting range / [default setting]		Information
0x2D44:002	Overspeed monitoring: Response		Selection of the response to the triggering of motor speed monitoring. Associated event ID: • 537526022 | 0x2009FF06 - Motor overspeed
	0	No response	▸ Severity 📖574
	1	**Fault > CiA402**	
	2	Warning	

12.9 Frequency and speed limitations

By limiting the maximum output frequency to ± 599 Hz, the devices are not subject to the export restrictions of the "EC-Dual-Use Regulation" (EC 428/2009).

Output frequency

The output frequency of the servo inverter is limited to a maximum value, the amount of which corresponds to the lower of the two following values:

$$f_{lim} = \frac{f_{chop}}{8} \quad \text{or} \quad f_{lim} = f_{max\_device}$$

f_{lim} Maximum output frequency

f_{chop} Switching frequency 0x2939

f_{max_device} Maximum device output frequency: ± 599 Hz

Due to the limitation of the "Dual-Use Regulation" (EC 428/2009), values > 599 Hz do not lead to an increase of the output frequency. Please note the dead band that occurs in this case.

Speed setpoint

If servo control is used, the speed setpoint is limited depending on the number of motor pole pairs:

$$n_{lim} = \frac{f_{lim} \times 60}{zp}$$

n_{lim} Speed limit value

f_{lim} Maximum output frequency (± 599 Hz)

zp Number of motor pole pairs

- If the speed setpoint is limited, bit 1 ("Speed: Setpoint 1 limited") or bit 5 ("Speed: Setpoint 2 limited") is set in the Lenze status word 0x2831.
- The behavior corresponds to the behavior which is shown when the set maximum speed 0x6080 is reached.
- The sequence is as follows: First limit the speed to 0x6080, then limit to speed limit value n_{lim}.

Frequency setpoint

If V/f characteristic control is used, the frequency setpoint is limited in addition to the speed setpoint.

- If the frequency setpoint is limited, bit 10 ("Output frequency limited") is set in the Lenze status word 0x2831.

12.10 Testing the motor control

Parameter

Address	Name / setting range / [default setting]		Information
0x2825	Drive mode selection • Setting can only be changed if the inverter is disabled.		Internal service parameter
	0	**CiA402 operating modes**	
	1	Manual "voltage/frequency" test mode	
	2	Manual "current/frequency" test mode	
	3	Manual "current pulse" test mode	
	4	Manual control mode	
	5	Pole position identification (360°)	
	6	Pole position identification (min. movement)	
	7	Pole position identification (without movement)	
	8	Inverter characteristic identification	
	9	Motor parameters identification	
	10	Lh saturation characteristic identification	
	11	PRBS excitation - mechanical plant	
	12	PRBS excitation - current control loop	
	13	PRBS excitation - speed control loop	
	14	PRBS excitation - position control loop	
	15	Cable check	
	16	Leakage inductance identification	
	17	Manual "position" test mode	

12.10.1 General settings for test modes

Wiring check by means of manual test modes

Before starting the parameter setting of the inverter, check the motor wiring (motor connection / feedback connection) for errors and function and correct them if required:

1. Provided that the motor is connected in correct phase relation and the rotating field frequency 0x2DDD is positive, the motor shaft rotates clockwise.
2. An existing speed feedback in the rotor position (0x2DDE) generates a numerical value with positive counting direction. If required, take corrective measures: see the table at the end of the list.
3. After the controller inhibit (0x6040) has been activated, the following manual test modes are available via the parameter 0x2825:

- Manual "tension/frequency" test mode
- Manual "current/frequency" test mode

The parameters for the test modes can be adapted via the parameter . Please observe the notes in the description of the respective test mode.

Rotating field frequency 0x2DDD	Display 0x2DDE	Measure
CW	0...2047	None
	2047...0	Correct motor connection / feedback connection
CCW	2047...0	None
	0...2047	Correct motor connection / feedback connection

Parameter

Address	Name / setting range / [default setting]	Information
0x2835:001	Manual test mode: Current setpoint -1000 ... [**0**] ... 1000 %	Setting of the r.m.s. value of a phase current for the test mode. • 100 %: Rated motor current (0x6075)
0x2835:002	Manual test mode: Frequency -1000.0 ... [**0.0**] ... 1000.0 Hz	Setting of the frequency for the test mode.

Address	Name / setting range / [default setting]	Information
0x2835:003	Manual test mode: Starting angle -1000.0 ... [**0.0**] ... 1000.0 °	Setting of the starting angle for the test mode. Note! After the inverter has been enabled, the synchronous motor makes a jerky compensating movement if its pole position does not correspond to the starting angle.

12.10.2 Manual "tension/frequency" test mode

Functional description

In case of devices that correspond to the "dual use regulation" (EC 428/2009), values higher than + 599 Hz up to lower than - 599 Hz do not increase the output frequency. Please observe the deadband occurring in this case.

Further information can be found in the section "Frequency and speed limitations". 📖 290

After the controller is enabled in this test mode, a rotary field voltage is output at the motor terminals with the set output frequency f_{out}.

- If the selected frequency is positive, the motor should rotate clockwise when looking at the A side of the motor. If this is not the case, the motor phases are connected incorrectly.
- The output voltage level is determined by the following equation

Equation for calculating the output voltage			
$U_{out} = f_{out} \times \frac{U_{rated}}{f_{rated}}$			
Parameter	Symbol	Description	Dimension unit
0x2D82	V_{out}	Current output voltage	V
0x2835:002	f_{out}	Output frequency for test mode Please observe the notes in the section "Frequency and speed limitations". 📖 290	Hz
0x2B01:001	V_{rated}	Base voltage	V
0x2B01:002	f_{rated}	Base frequency	Hz

The manual "voltage / frequency" test mode also serves to check the wiring of the feedback system.

- If the feedback system of a synchronous motor is set correctly, an actual speed should be displayed that can be calculated with the following equation (if the feedback system of an asynchronous motor is set correctly, the actual speed is a bit lower due to the slip):

Equation for calculating the actual speed			
$n_{act} = \frac{f_{out}}{zp_{motor}} \times 60$			
Parameter	Symbol	Description	Dimension unit
0x606C	n_{act}	Actual speed	rpm
0x2835:002	f_{out}	Output frequency for test mode	Hz
0x2C01:001	zp_{Motor}	Number of motor pole pairs	

Conditions for the execution

- The motor must rotate freely.
- The servo inverter is error-free and in the "switched-on" device state.

Response of the motor during performance

The motor moves as a function of the set output frequency.

How to activate the manual "voltage/frequency" test mode:

1. Disable the inverter ▸ Enable operation. 📖 315
2. Change to the "voltage/frequency" test mode. ▸ 0x2825 = 1
3. Enable the inverter to start the test mode.
4. To stop the test mode again:
   - Disable inverter.
   - Change back to the "CiA402 operating mode". ▸ 0x2825 = 0

12.10.3 Manual "current/frequency" test mode

Preconditions for the performance

- The motor must rotate freely.
- The inverter is error-free and in "Switched on" device state.

Functional description

In this test mode, three phase currents are injected into the connected motor after the inverter is enabled.

- Adaptation of the phase currents:

Parameter	Info	Data type
0x2835:001	R.m.s. value of a phase current • Selected in [%] based on the rated motor current.	INTEGER_16
0x2835:002	Frequency	INTEGER_16
0x2835:003	Starting angle	INTEGER_16

- Reading out the present phase currents:

Parameter	Info	Data type
0x2D83:002	Motor current phase U	INTEGER_32
0x2D83:003	Motor current phase V	INTEGER_32
0x2D83:004	Motor current phase W	INTEGER_32

Advantages compared to the manual "voltage/frequency" test mode

- The current cannot be set freely but is adjusted to a defined value.
- If a synchronous motor is connected, it is possible to predict the torque.

Response of the motor during performance

- The motor moves as a function of the set output frequency.

After the inverter has been enabled, the synchronous motor makes a jerky compensating movement if its pole position does not correspond to the starting angle.

How to activate the manual "current/frequency" test mode:

1. Disable inverter ▸ Enable operation. 📖 315
2. Change to the "current/frequency" test mode. ▸ 0x2825 =2
3. Enable the inverter to start the test mode.
4. To stop the test mode again:
   - Disable inverter.
   - Change back to the CiA402 operating mode. ▸ 0x2825 = 0

12.10.4 Manual "current pulse" test mode

The stator resistance and the stator inductance of the inverter must be adapted to the electrical characteristics of the motor. For an experimental adjustment, the manual "Current pulse" test mode can be used.

This test mode is provided for adjusting the current controller in the "Servo control for synchronous motor/asynchronous motor" operating mode and is not suitable for adjusting the Imax controller in the "V/f characteristic control (VFC)" operating mode!

In the manual "Current pulse" test mode, setpoint step-changes are applied to the current controller input subsequent to controller enable. The step responses must then either be recorded using an oscilloscope and a clamp-on ammeter, or using the oscilloscope function of the inverter. It is the objective to optimise the two "Gain" and "Reset time" current controller parameters by evaluating the step responses so that a speedy current characteristic is achieved, which, if possible, is free of harmonics.

In the case of motors with single pole windings, satisfactory results are possibly only achieved with a current-dependent correction of the current controller parameters. For this purpose, a characteristic is stored in the inverter, which describes the current dependance of the stator leakage inductance and which tracks the current controller gain.

After the inverter has been enabled, the synchronous motor makes a jerky compensating movement if its pole position does not correspond to the starting angle.

The motor phase U is energized with a DC current the level of which is determined via the following equation.

$$I_{phase\_U} = \sqrt{2} \times I_{test}[\%] \times \frac{I_{rated}}{100\%}$$

In motor phases V and W, half of this DC current flows (negative; from the motor).

$$I_{phase\_V,\_W} = -0.5 \times \sqrt{2} \times I_{test}[\%] \times \frac{I_{rated}}{100\%}$$

The following parameters are relevant to the calculation:

- Manual test mode: setpoint current ▸ 0x2835:001
- Motor rated current ▸ 0x6075
- Read only: current phase U ▸ 0x2D83:002
- Read only: current phase V ▸ 0x2D83:003
- Read only: current phase W ▸ 0x2D83:004

Conditions for the execution

- The motor must be parameterised completely.
- The motor utilisation (I^2xt) monitoring must be parameterised and switched to active. ▸ Motor overload monitoring (i^2xt) 🕮 278
- The motor must rotate freely.
- The inverter is error-free and switched on.
- The rotor of synchronous motors must be in the pole centre during the test. For some synchronous motors, it might be required to align and lock the rotor in the pole centre.
  - Using the manual test mode "current/frequency" is useful for a one-time alignment of the rotor with the following settings:

    R.m.s. value = 70 ... 100 %; frequency = 0 Hz; starting angle = 0°

    ▸ Manual "current/frequency" test mode 🕮 294
  - Fixation by means of the holding brake or the use of external fixation aids

Responses of the motor during performance

Remove the mechanical fixation after the current controller has been adjusted!

The motor usually aligns itself only once with the first controller enable.

How to adjust the current controller by means of the manual test mode "current pulse":

- Disable inverter.
- Calculate start parameters for the inverter based on the parameterised motor data.
  - The automatic calculation is made via the parameter 0x2822:013.
  - You can determine the start parameter manually.
- Change to the "current pulse" test mode. ▸ 0x2825 = 3
- Set the setpoint current for the manual test mode. ▸ 0x2835:001
- Enable the inverter for a short while to start the test mode.
- Measure the step response of the motor current in the motor phase U by means of an oscilloscope and a clamp-on ammeter.
- Evaluate the step response.
- Adjust the gain and the reset time of the inverter.
- Repeat steps 1 ... 6 until the optimum step response of the motor current has been reached.
- Exit the test mode:
  - Disable the inverter.
  - Change to the CiA402 mode. ▸ 0x2825 = 0
- For permanent saving: save changed current controller parameters.

13 I/O extensions and control connections

13.1 Configure digital inputs

13.1.1 Digital inputs 1 ... 4

Settings for digital input 1 ... 4.

Digital inputs 1 ... 4 are located onboard on terminal X3.

Details

The digital inputs are used for control tasks. For this purpose, the digital inputs are available as selectable triggers for functions.

The following settings are possible for the digital inputs:

- Debounce time ①
- Inversion ②
- Manual I/O control ③

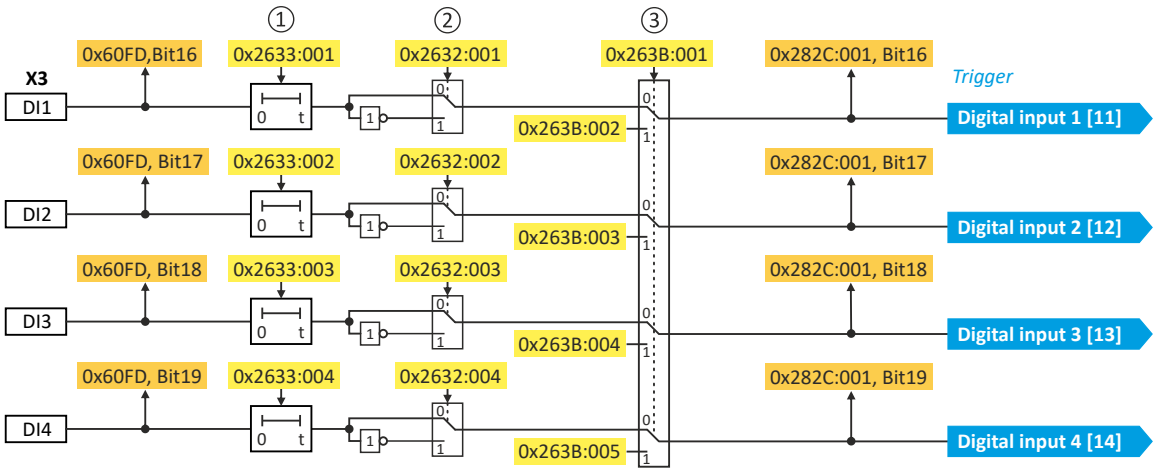

Diagnostic parameters

Display of the logic state of the digital inputs: 0x60FD.

Debounce time

The debounce time can be used to prevent short disturbances from being erroneously recognized as signals.

Inversion

Each digital input can be configured in such a way that the state pending at the terminal is logically inverted internally. This way, a closed contact, for instance, serves to deactivate an assigned function instead of activating it.

Manual I/O control

Each digital input can be manually overridden. After the function is activated, the actual values are "frozen". Afterwards, each digital input can be overwritten manually.

Setting:

- Activation for all digital inputs: 0x263B:001
- Entry of the individual manual values: 0x263B:002 ... 0x263B:005

Parameter

Address	Name / setting range / [default setting]		Information
0x2632:001	Inversion of digital inputs: Digital input 1		Inversion of digital input 1
	0	**Not inverted**	
	1	Inverted	
0x2632:002	Inversion of digital inputs: Digital input 2		Inversion of digital input 2
	0	**Not inverted**	
	1	Inverted	
0x2632:003	Inversion of digital inputs: Digital input 3		Inversion of digital input 3
	0	**Not inverted**	
	1	Inverted	
0x2632:004	Inversion of digital inputs: Digital input 4		Inversion of digital input 4
	0	**Not inverted**	
	1	Inverted	
0x2633:001	Digital input debounce time: Digital input 1 0 ... [**0**] ... 50 ms		Debounce time of digital input 1
0x2633:002	Digital input debounce time: Digital input 2 0 ... [**0**] ... 50 ms		Debounce time of digital input 2
0x2633:003	Digital input debounce time: Digital input 3 0 ... [**0**] ... 50 ms		Debounce time of digital input 3
0x2633:004	Digital input debounce time: Digital input 4 0 ... [**0**] ... 50 ms		Debounce time of digital input 4
0x263B:001	Digital inputs internal control: Activation		Activation of the internal control for all available digital inputs.
	0	**Off**	
	1	On	
0x263B:002	Digital inputs internal control: DI1 internal control		Input of the manual value for the digital inputs.
	0	**Off**	
	1	On	
0x263B:003	Digital inputs internal control: DI2 internal control		
	0	**Off**	
	1	On	
0x263B:004	Digital inputs internal control: DI3 internal control		
	0	**Off**	
	1	On	
0x263B:005	Digital inputs internal control: DI4 internal control		
	0	**Off**	
	1	On	

13.1.2 Digital inputs 5 ... 9

Settings for digital input 5 ... 9.

Digital inputs 5 ... 9 are only available with I/O extension module (Type A) I9MAGBV0000000.

Parameter

Address	Name / setting range / [default setting]		Information
0x2632:005	Inversion of digital inputs: Digital input 5		Inversion of digital input 5
	0	**Not inverted**	
	1	Inverted	
0x2632:006	Inversion of digital inputs: Digital input 6		Inversion of digital input 6
	0	**Not inverted**	
	1	Inverted	
0x2632:007	Inversion of digital inputs: Digital input 7		Inversion of digital input 7
	0	**Not inverted**	
	1	Inverted	

Address	Name / setting range / [default setting]	Information
0x2632:008	Inversion of digital inputs: Digital input 8	Inversion of digital input 8
	0 **Not inverted**	
	1 Inverted	
0x2632:009	Inversion of digital inputs: Digital input 9	Inversion of digital input 9
	0 **Not inverted**	
	1 Inverted	
0x2633:005	Digital input debounce time: Digital input 5 0 ... [**0**] ... 50 ms	Debounce time of digital input 5
0x2633:006	Digital input debounce time: Digital input 6 0 ... [**0**] ... 50 ms	Debounce time of digital input 6
0x2633:007	Digital input debounce time: Digital input 7 0 ... [**0**] ... 50 ms	Debounce time of digital input 7
0x2633:008	Digital input debounce time: Digital input 8 0 ... [**0**] ... 50 ms	Debounce time of digital input 8
0x2633:009	Digital input debounce time: Digital input 9 0 ... [**0**] ... 50 ms	Debounce time of digital input 9
0x263B:001	Digital inputs internal control: Activation	Activation of the internal control for all available digital inputs.
	0 **Off**	
	1 On	
0x263B:006	Digital inputs internal control: DI5 internal control	Input of the manual value for the digital inputs.
	0 **Off**	
	1 On	
0x263B:007	Digital inputs internal control: DI6 internal control	
	0 **Off**	
	1 On	
0x263B:008	Digital inputs internal control: DI7 internal control	
	0 **Off**	
	1 On	
0x263B:009	Digital inputs internal control: DI8 internal control	
	0 **Off**	
	1 On	
0x263B:010	Digital inputs internal control: DI9 internal control	
	0 **Off**	
	1 On	

13.2 Configure analog inputs

13.2.1 Analog input 1

Settings for analog input 1.

Details

The analog input 1 can be used as setpoint source.

The following settings are possible for the analog input:

- Definition of the input range ①
- Filter time for low-pass filters ②
- Definition of the setting range (min/max range)③
- Dead band for eliminating the smallest signal levels ④
- Manual I/O control ⑤

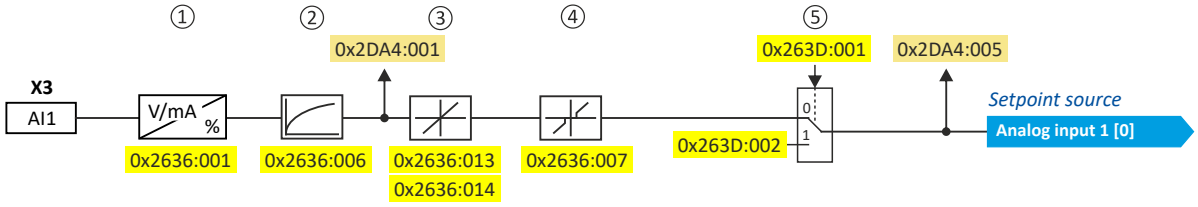

Diagnostic parameters:

- Display of the input signal status: 0x2DA4:016
  - 24-V supply status
  - Calibration status
  - Input current status
  - Input voltage status
- Display of filtered input signal in %: 0x2DA4:001
- Display of setpoint in %: 0x2DA4:005

Definition of the input range

The analog input can be configured as voltage or current input. Internally, the signal is always converted to a value in percent.

Definition of the setting range

The setting range results from the set min and max value for the respective mode.

Manual I/O control

The analog input can be overridden manually. After the function is activated, the actual values are "frozen". Afterwards, each analog input can be overwritten manually.

Setting:

- Activation: 0x263D:001
- Entering the manual value: 0x263D:002

Parameter

Address	Name / setting range / [default setting]		Information
0x2636:001	Analog input 1: Input range		Definition of the input range.
	0	**0 ... 10 VDC**	
	3	-10 ... +10 VDC	
	4	4 ... 20 mA	
	5	0 ... 20 mA	
0x2636:006	Analog input 1: Filter time 0 ... [**10**] ... 10000 ms		PT1 time constant for low-pass filter. • By the use of a low-pass filter, the impacts of noise to an analog signal can be minimised. • For an optimum filter effect, first the noise frequency has to be determined. The time constant then has to be set so that it equals the reciprocal value of the double frequency.

Address	Name / setting range / [default setting]	Information
0x2636:007	Analog input 1: Dead band 0.0 ... [**0.0**] ... 100.0 %	Optional setting of a dead band that is placed symmetrically around the frequency zero point. • If the analog input value is within the dead band, the output value for the motor control is set to "0". • 100 % = maximum value of analog input (, ,) • Example: Dead band 10 % of 50 Hz: -10 V ... 10 V, Dead band -5 Hz ... 5 Hz, 0 V... 10 V, Dead band 0 Hz ... 5 Hz
0x2636:010	Analog input 1: Error response	Error response for analog input 1. Associated event ID: • 537489537 | 0x20097081 - Fault - Analog input 1
	0 **No response**	▸ Severity 📖 574
	1 Fault > CiA402	
	2 Warning	
0x2636:013	Analog input 1: Minimum value for scaling -200.0 ... [**0.0**] ... 200.0 %	Minimum value in percent for scaling the value at the analog input (Value in percent (0x2DA4:001)).
0x2636:014	Analog input 1: Maximum value for scaling -200.0 ... [**100.0**] ... 200.0 %	Maximum value in percent for scaling the value at the analog input (Value in percent (0x2DA4:001)).
0x2DA4:005	Diagnostics of analog input 1: Scaled percent value • Read only: x.xx %	Display of the actual value at the analog input, scaled with the following parameters: • **Minimum value for scaling**. ▸ 0x2636:013 • **Maximum value for scaling**. ▸ 0x2636:014
0x263D:001	Analog inputs internal control: Activation	Activation of the internal control for all available analog inputs.
	0 **Off**	
	1 On	
0x263D:002	Analog inputs internal control: AI1 internal control -200.00 ... [**100.00**] ... 200.00 %	Input of the manual value for the analog inputs.

13.3 Configure digital outputs

13.3.1 Digital output 1

Settings for digital output 1.

Digital output 1 is located onboard on terminal X3.

Details

The digital output 1 is controlled with the trigger selected in 0x2634:002.

The following settings are possible for the digital output:

- Inversion ①
- Manual I/O control ②

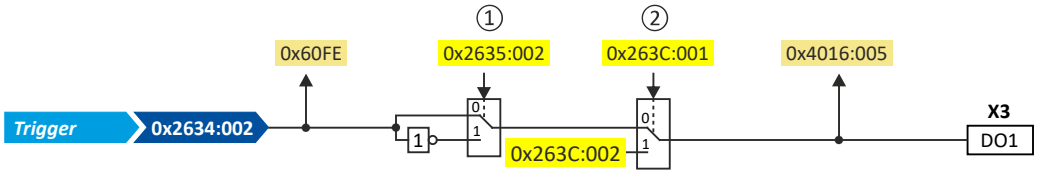

Diagnostic parameters:

- Display of the logic state of the trigger signal:
- Display of the logic state of the digital output: 0x4016:005

Inversion

The trigger signal of the digital output can be internally inverted logically.

Manual I/O control

The digital output can be overridden manually. After the function is activated, the actual values are "frozen". Afterwards, each digital output can be overwritten manually.

Setting:

- Activation: 0x263C:001
- Entering the manual value: 0x263C:002

Parameter

Address	Name / setting range / [default setting]		Information
0x2634:002	Digital outputs function: Digital output 1		Assignment of a trigger to digital output 1. Trigger = FALSE: X3/DO1 set to LOW level. Trigger = TRUE: X3/DO1 set to HIGH level. Notes: • An inversion set in 0x2635:002 is taken into consideration here.
	10	**Signal from application**	
	115	Release holding brake	
0x2635:002	Inversion of digital outputs: Digital output 1		Inversion of digital output 1
	0	**Not inverted**	
	1	Inverted	
0x4016:005	Digital output 1: Terminal state • Read only		Display of the logic state of output terminal X3/DO1.
	0	FALSE	
	1	TRUE	
0x263C:001	Digital outputs internal control: Activation		Activation of the internal control for all available digital outputs.
	0	**Off**	
	1	On	
0x263C:002	Digital outputs internal control: DO1 internal control		Input of the manual value for the digital outputs.
	0	**Off**	
	1	On	

13.3.2 Digital output 2

Parameter

Address	Name / setting range / [default setting]		Information
0x2635:003	Inversion of digital outputs: Digital output 2		Inversion of digital output 2
	0	**Not inverted**	
	1	Inverted	
0x263C:003	Digital outputs internal control: DO2 internal control		Input of the manual value for the digital outputs.
	0	**Off**	
	1	On	

13.3.3 Digital outputs 2 ... 6

Settings for digital output 2... 6.

Digital outputs 2 ... 6 are only available with I/O extension module (Type A) I9MAGBV0000000.

Parameter

Address	Name / setting range / [default setting]		Information
0x2635:003	Inversion of digital outputs: Digital output 2		Inversion of digital output 2
	0	**Not inverted**	
	1	Inverted	
0x2635:004	Inversion of digital outputs: Digital output 3		Inversion of digital output 3
	0	**Not inverted**	
	1	Inverted	
0x2635:005	Inversion of digital outputs: Digital output 4		Inversion of digital output 4
	0	**Not inverted**	
	1	Inverted	
0x2635:006	Inversion of digital outputs: Digital output 5		Inversion of digital output 5
	0	**Not inverted**	
	1	Inverted	
0x2635:007	Inversion of digital outputs: Digital output 6		Inversion of digital output 6
	0	**Not inverted**	
	1	Inverted	
0x263C:001	Digital outputs internal control: Activation		Activation of the internal control for all available digital outputs.
	0	**Off**	
	1	On	
0x263C:003	Digital outputs internal control: DO2 internal control		Input of the manual value for the digital outputs.
	0	**Off**	
	1	On	
0x263C:004	Digital outputs internal control: DO3 internal control		
	0	**Off**	
	1	On	
0x263C:005	Digital outputs internal control: DO4 internal control		
	0	**Off**	
	1	On	
0x263C:006	Digital outputs internal control: DO5 internal control		
	0	**Off**	
	1	On	
0x263C:007	Digital outputs internal control: DO6 internal control		
	0	**Off**	
	1	On	

14 Configure engineering port

The given path leads you to the engineering port.

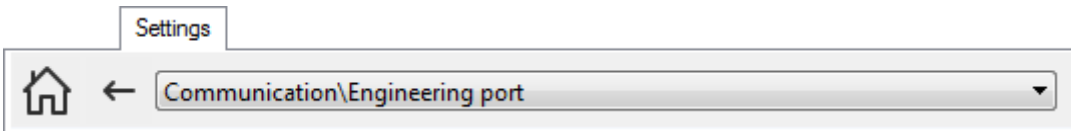

14.1 Basic setting

Preconditions

- The wired communication with the inverter has been established.
  - If this condition is not met, read more detailed notes in section "Generate a connection between inverter and »EASY Starter«". 📖 32
- The PC with the installed »EASY Starter« is started.

Automatic configuration

By default, the engineering port of the inverter receives its IP address automatically from a DHCP server. By pressing the "DHCP" button, the 0x2451:004 parameter is active ("enabled").

Now, the IP configuration is completed. The inverter can be accessed via the Ethernet connection.

Manual configuration

Make sure to press the "Restart with current values" button every time you change the values.

The engineering port must be configured when a static address is to be assigned.

For this purpose, the "DHCP" button must bet set to the "Disabled" state.

The following parameters can be entered in the »EASY Starter«:

- IP address
- Network mask
- Gateway address

Using a configuration file

A file named "ip.txt" can be used to reset the IP address. This file must be stored on the SD card in the root directory.

The network settings are evaluated and accepted when the inverter is started. The file is then renamed as "ip_old.txt".

The structure of the text file can look as follows:

- *192.168.101.221*
- *255.255.255.0*
- *192.168.101.1*

If the static IP address is to be reset to DHCP, only the content of the ip.txt file must be set to "DHCP". This serves to use DCHP for a dynamic address allocation at next boot.

Parameter

Address	Name / setting range / [default setting]		Information
0x2450	Engineering port control		Acceptance of the current settings (0x2451:xxx) for the engineering port.
	0	**No action/No error**	Only status feedback
	1	Restart with current values	Restart the device to apply the current settings.
	10	Busy	Only status feedback
	11	Action cancelled	
	12	Faulted	
0x2451:001	Engineering port settings: IP address 0.0.0.0 ... [**0.0.0.0**] ... 255.255.255.255		Setting of the IP address.
0x2451:002	Engineering port settings: Subnet 0.0.0.0 ... [**0.0.0.0**] ... 255.255.255.255		Setting of the subnet mask.
0x2451:003	Engineering port settings: Gateway 0.0.0.0 ... [**0.0.0.0**] ... 255.255.255.255		Setting of the gateway address.
0x2451:004	Engineering port settings: DHCP		Use (enable) of the Dynamic Host Configuration Protocol (DHCP).
	0	Disabled	
	1	**Enabled**	

Address	Name / setting range / [default setting]		Information
0x2451:007	Engineering port settings: DNS server address 0.0.0.0 ... [**0.0.0.0**] ... 255.255.255.255		
0x245B:001	System time: Time base		
	0	**NTP**	NTP synchronization Network Time Protocol (Standard for the synchronization of clocks in computer systems) Note! • NTP server addresses must be defined in 0x245A. • An NTP server must send the current system time via Ethernet. • The sent system time is automatically adopted.
	1	EtherCAT Distributed Clocks	EtherCAT Distributed Clocks synchronization Note! • The Distributed Clocks synchronization must be active. • The system time of the higher-level controller is automatically adopted.
	2	Manual input	No automatic synchronization Note! The time entered manually in 0x2452B:002 is adopted as the system time.
0x245B:002	System time: Current time 0 ... [] ... 18446744073709551615 ns		• 0x245B:001 = 0 or 1: - Display of the current synchronized system time • 0x245B:001 = 2: - Manual timing - Format: TT/MM/YY HH:MM:SS.ms - The system time is recalculated after each mains switching New system time = last stored time + value of the switch-on hour counter

14.2 NTP server addresses

Parameter

Address	Name / setting range / [default setting]		Information
0x245A:001	NTP server addresses: Activate NTP server addresses		
	0	**No action/no error**	
	1	Restart with current values	
	10	In progress	
	11	Action cancelled	
	12	Fault	
0x245A:002	NTP server addresses: NTP server address 1 0.0.0.0 ... [**0.0.0.0**] ... 255.255.255.255		
0x245A:003	NTP server addresses: NTP server address 2 0.0.0.0 ... [**0.0.0.0**] ... 255.255.255.255		
0x245A:004	NTP server addresses: NTP server address 3 0.0.0.0 ... [**0.0.0.0**] ... 255.255.255.255		
0x245A:005	NTP server addresses: NTP server address 4 0.0.0.0 ... [**0.0.0.0**] ... 255.255.255.255		
0x245A:006	NTP server addresses: NTP server name 1		
0x245A:007	NTP server addresses: NTP server name 2		
0x245A:008	NTP server addresses: NTP server name 3		
0x245A:009	NTP server addresses: NTP server name 4		

14.3 Diagnostics

The network settings can be diagnosed as follows:

Parameter

Address	Name / setting range / [default setting]	Information
0x2452:001	Active engineering port settings: IP address • Read only	Display of the active IP address.
0x2452:002	Active engineering port settings: Subnet • Read only	Display of the active subnet mask.
0x2452:003	Active engineering port settings: Gateway • Read only	Display of the active gateway address.
0x2452:004	Active engineering port settings: DHCP • Read only 0 Disabled 1 Enabled	Display of the DHCP status.
0x2452:005	Active engineering port settings: MAC address • Read only	Display of the MAC-ID.
0x2452:006	Active engineering port settings: Link status • Read only 0 No link established 1 Link established	Display of the connection status.
0x2452:007	Active engineering port settings: DNS server address • Read only	Display of the DNS server address.

15 Configuring the network

Supported drive profiles:

CiA 402 device profile 📖 309

Available network options:

- CANopen 📖 331
- EtherCAT 📖 383
- onboard EtherCAT - Operation as master or slave on the system bus 📖 365
- EtherNet/IP 📖 395
- PROFINET 📖 431
- onboard EtherCAT - Operation as standard EtherCAT slave 📖 356

The following conventions are used in this documentation for specifying the parameter address:

- The index is specified as a hexadecimal value.
- The subindex is specified as a decimal value.

15.1 CiA 402 device profile

The CiA® 402 device profile defines the functional behaviour of stepping motors, servo drives, and frequency inverters. In order to be able to describe the different drive types, various operating modes and device parameters are specified in the device profile. Each operating mode provides objects (e.g. for the setpoint speed, acceleration and deceleration) to generate the desired drive behaviour.

- CiA® is a registered community trademark of the CAN in Automation e. V user organization.
- More information can be found in the CiA 402 specification (CANopen device profile for drives and Motion Control) of the CAN in Automation (CiA) user organization: http://www.can-cia.org

15.1.1 Supported operating modes

The inverter supports the following CiA 402 operating modes:

CiA 402 operating modes	Can be used with	
	Servo control	V/f characteristic control
Operating mode "CiA 402 cyclic sync position mode (csp)" 📖 134	●	-
Operating mode "CiA 402 velocity mode (vl)" 📖 147	●	●
Operating mode "CiA 402 cyclic sync velocity mode (csv)" 📖 154	●	●
Operating mode "CiA 402 cyclic sync torque mode (cst)" 📖 165	●	-

A CiA 402 operating mode can be activated via 0x6060.

Parameter

Address	Name / setting range / [default setting]		Information
0x6060	CiA: Operation mode		CiA: Operation mode
	-13	MS: Manual jog open loop (MOL)	Manufacturer-specific manual control ▸ Operation mode "Manual Jog" 📖 330
	-12	MS: Pole position identification (PPI)	Manufacturer-specific pole position identification (PLI) ▸ Synchronous motor: Pole position identification (PPI) 📖 207 ▸ Selection of the PPI method for CiA mode 📖 208
	0	**No selection**	No selection
	2	CiA: Velocity mode (vl)	▸ Operating mode "CiA 402 velocity mode (vl)" 📖 147
	8	CiA: Cyclic sync position (csp)	▸ Operating mode "CiA 402 cyclic sync position mode (csp)" 📖 134
	9	CiA: Cyclic sync velocity mode (csv)	▸ Operating mode "CiA 402 cyclic sync velocity mode (csv)" 📖 154
	10	CiA: Cyclic sync torque mode (cst)	▸ Operating mode "CiA 402 cyclic sync torque mode (cst)" 📖 165
0x6061	CiA: Active operation mode • Read only		CiA: Active operation mode
	-13	MS: Manual jog open loop (MOL)	Manufacturer-specific manual control
	-12	MS: Pole position identification (PPI)	Manufacturer-specific pole position identification (PLI)
	-11	Identification	
	-10	Test mode	
	0	No selection	No selection
	2	CiA: Velocity mode (vl)	▸ Operating mode "CiA 402 velocity mode (vl)" 📖 147
	8	CiA: Cyclic sync position (csp)	▸ Operating mode "CiA 402 cyclic sync position mode (csp)" 📖 134
	9	CiA: Cyclic sync velocity mode (csv)	▸ Operating mode "CiA 402 cyclic sync velocity mode (csv)" 📖 154
	10	CiA: Cyclic sync torque mode (cst)	▸ Operating mode "CiA 402 cyclic sync torque mode (cst)" 📖 165
0x6502	Supported drive modes • Read only		Bit coded display of the operating modes supported.
	Bit 1	CiA: Velocity mode	1 = CiA: velocity mode is supported.
	Bit 7	Cyclic sync position mode	1 ≡ Cyclic sync position mode is supported.
	Bit 8	Cyclic sync velocity mode	1 ≡ Cyclic sync velocity mode is supported.
	Bit 9	Cyclic sync torque mode	1 ≡ Cyclic sync torque mode is supported.

15.1.2 Basic setting

Set the following parameters.

Parameter

Address	Name / setting range / [default setting]		Information
0x605A	CiA: Quick stop mode		Device status after exiting the quick stop ramp.
	2	Ramp > switch on disabled	Automatic change to the "Switch-on inhibited" device state. • The "Quick stop active [54]" status is reset to FALSE after ramp-down to standstill.
	6	**Ramp > quick stop active**	The inverter remains in the "Quick stop active" device state. • The "Quick stop active [54]" status remains TRUE until the "Quick stop" function is activated.
0x605B	Shutdown option code		Defines the transition from the status "Operation enabled" to "Ready to start".
	0	**Disable drive function**	0: Immediate inverter disable (standard setting)
	1	Slow down on quick stop ramp and disable drive function	1: "Quick stop" with subsequent inverter disable.
0x605E	CiA: Response to minor faults		Set the transition response for slight errors. List of minor faults: ▸ Configuring the transition response for minor faults
	-2	**Advanced quick stop**	If possible, the motor is brought to a standstill with the "quick stop" function. If this is not possible (e.g. in the event of an encoder error), a braking torque is generated with reverse current braking or short-circuit braking.
	0	No transition response	The motor is no longer energized.
	2	Quick stop	The motor is brought to a standstill with the "quick stop" function.
0x2826	Timeout for error response 0 ... [**4**] ... 100 s		If the transition reaction specified in CiA: Response to minor faults is not completed within this time, the inverter changes to the 'Error' state. The motor is no longer energized. When the automatic brake is activated, a brake controlled by the inverter is applied. ▸ 0x2820:001
0x607E	Polarity 0 ... [**0**] ... 0 • Setting can only be changed if the inverter is disabled.		Setting of the polarity of the position setpoint. 0 ≡ the position setpoint is interpreted as entered in 0x607A (Set position).
0x6085	Quick stop deceleration 0 ... [**2147483647**] ... 2147483647		Change in velocity used for deceleration to a standstill if quick stop is activated.

15.1.3 Process input data

Information on the CiA 402 process input data can be found in the following sections:

- Configure position control ▸ Process input data (CiA 402 objects) 🕮 137
- Configure speed control ▸ Process input data (CiA 402 objects) 🕮 159
- Configure torque control ▸ Process input data (CiA 402 objects) 🕮 168

15.1.4 Process output data

Information on the CiA 402 process output data can be found in the following sections:

- Configure position control ▸ Process output data (CiA 402 objects) 🕮 137
- Configure speed control ▸ Process output data (CiA 402 objects) 🕮 159
- Configure torque control ▸ Process output data (CiA 402 objects) 🕮 168

15.1.5 Commands for device state control

0x6040 (CiA control word) can be used to trigger commands to put the inverter into a certain device state.

Command	Bit pattern in the CiA control word (0x6040)							
	Bit 7	Bit 6	Bit 5	Bit 4	Bit 3	Bit 2	Bit 1	Bit 0
	Reset fault	Dependent on the operating mode			Operation enable	Activating quick stop	Establish readiness for operation	Switch-on
Switch-off 313	0	X	X	X	X	1	1	0
Switch on 314	0	X	X	X	0	1	1	1
Enable operation 315	0	X	X	X	1	1	1	1
Activate quick stop 316	0	X	X	X	X	0	1	X
Disable operation 317	0	X	X	X	0	1	1	1
Pulse inhibit 318	0	X	X	X	X	X	0	X
Reset fault 319	0↗1	X	X	X	X	X	X	X
X = state is not relevant								

More Lenze-specific control bits (bit 8 ... 15)

Command	Bit pattern in the CiA control word (0x6040)							
	Bit 15	Bit 14	Bit 13	Bit 12	Bit 11	Bit 10	Bit 9	Bit 8
	Reserved	Release brake	Reserved	Dependent on the operating mode				Stop motor
Apply brake	X	0	X	X	X	X	X	X
Release brake	X	1	X	X	X	X	X	X
Stop motor	X	X	X	X	X	X	X	1
X = state is not relevant								

Detailed information on the various commands can be found in the following sections.

Parameter

Address	Name / setting range / [default setting]		Information
0x6040	CiA control word 0x0000 ... [**0x0000**] ... 0xFFFF		Mappable CiA control word with bit assignment according to device profile CiA 402.
	Bit 0	Switch on	1 = switch-on
	Bit 1	Enable voltage	1 = Enable voltage
	Bit 2	Disable quick stop	0 = activate quick stop
	Bit 3	Enable operation	1 = Enable operation
	Bit 4	Operation mode specific	
	Bit 5	Operation mode specific	
	Bit 6	Operation mode specific	
	Bit 7	Fault reset	0-1 edge = fault reset
	Bit 8	Halt	1 = stop motor (ramping down to frequency setpoint 0 Hz)
	Bit 9	Operation mode specific	Operating mode specific
	Bit 14	Release holding brake	1 = release holding brake ⚠ CAUTION! • The manually triggered "Release holding brake" command has a direct impact on the "Release holding brake [115]" trigger. Thus, the holding brake can be manually released if the power section is switched off. • The responsibility for a manual opening of the holding brake lies with the user of the external trigger source for the "Release holding brake" command. ▸ Holding brake control 240
0x2DE0:014	Overwrite bit 4 of CiA control word		
	0	**No overwrite**	
	1	Overwrite with FALSE	
	2	Overwrite with TRUE	

Example

A PLC program of a PLCopen control can, for instance, trigger several commands for state changes in a row by the level change at the *bRegulatorOn* input of the "MC_Power" block.

In the mentioned example, these device commands are "Switch-off" and "Switch on" in this order.

15.1.5.1 Switch-off

This command serves to change the "Switch-on inhibited" device state to the "Ready to switch on" device state.

If the pulse inhibit has already been deactivated and the device status of the inverter is "Operation enabled", this command sets the pulse inhibit again.

- If automatic brake operation is activated, the parameterized Brake closing time (0x2820:002) is observed: The system waits until the brake is applied before the pulse inhibit is set. In the CiA 402 "CiA: Velocity mode", the Brake closing time is not observed.
- The motor has no torque.
- The device state "Switched on" or "Operation enabled" changes back to the "Ready to switch on" state.

⚠ DANGER!

Uncontrolled motor movements by pulse inhibit.

If the motor has no torque, a load that is connected to motors without a holding brake may cause uncontrolled movements! Without a load, the motor will coast.

Possible consequences: Death or severe injuries

► Only operate the inverter under permissible load conditions.

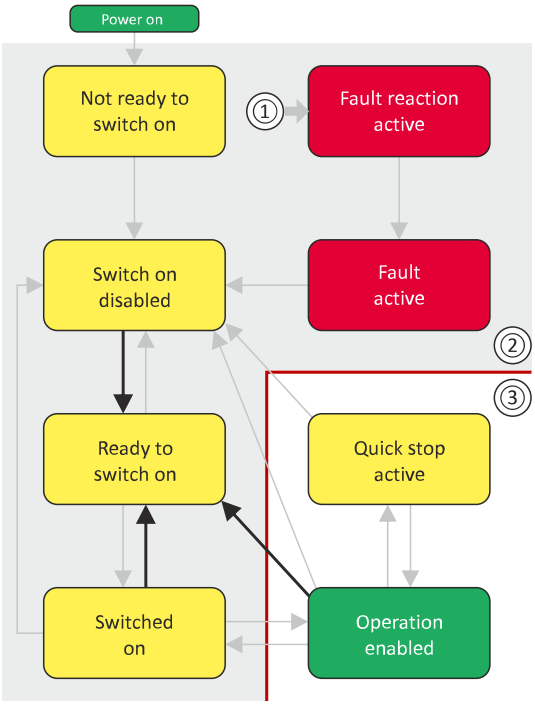

1 From all states
2 Power section disabled (pulse inhibit)
3 Power section enabled

Bit pattern in the CiA control word (0x6040)								
Bit 15 ... 8	**Bit 7**	**Bit 6**	**Bit 5**	**Bit 4**	**Bit 3**	**Bit 2**	**Bit 1**	**Bit 0**
Reserved (specific)	**Reset fault**	**Operating mode dependent**			**Operation enabled**	**Activate quick stop**	**Establish readiness for operation**	**Switch-on**
X	0	X	X	X	X	1	1	0
X = state is not relevant								

15.1.5.2 Switch on

This command serves to deactivate the switch on inhibit which is active after switch on or after the reset (acknowledgement) of an error.

A changeover to the "Switched on" device status takes place.

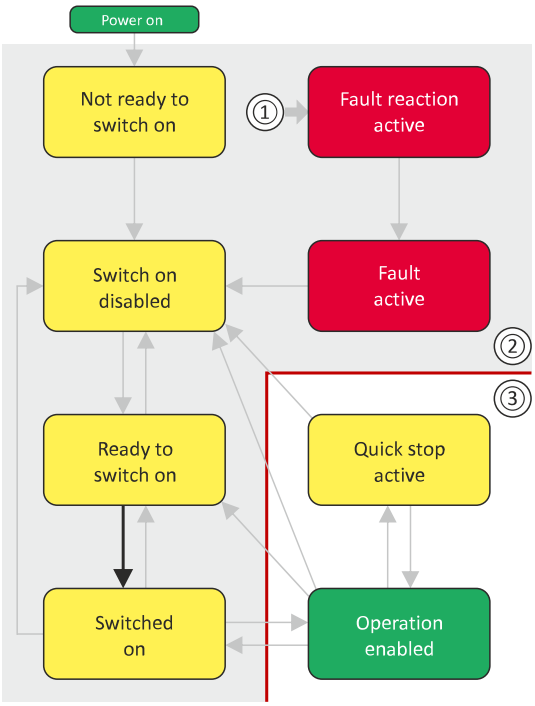

1 From all states
2 Power section inhibited (pulse inhibit)
3 Power section enabled

Bit pattern in the CiA control word (0x6040)								
Bit 15 ... 8	**Bit 7**	**Bit 6**	**Bit 5**	**Bit 4**	**Bit 3**	**Bit 2**	**Bit 1**	**Bit 0**
Reserved (specific)	**Reset fault**	**Operating mode-dependent**			**Operation enabled**	**Activate quick stop**	**Establish readiness for operation**	**Switch-on**
X	0	X	X	X	0	1	1	1
X = state is not relevant								

15.1.5.3 Enable operation

This command enables the operation and stop an active quick stop again.

- A changeover to the "Operation enabled" device status takes place.
- The output stages of the inverter become active.

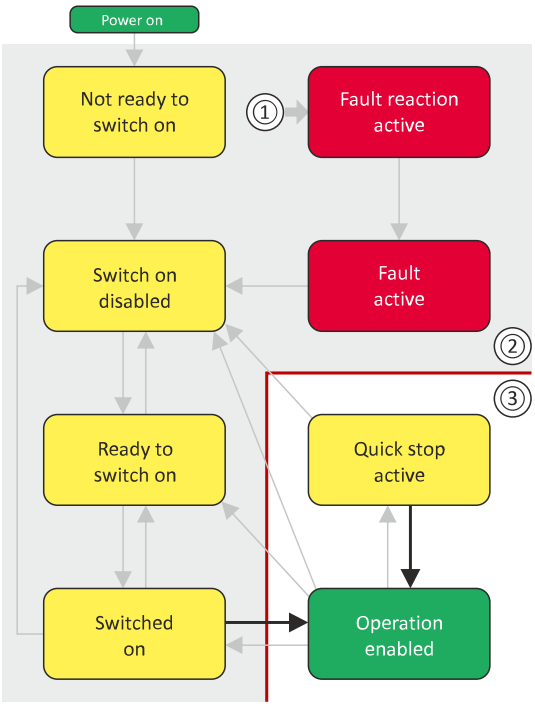

1 From all states
2 Power section inhibited (pulse inhibit)
3 Power section enabled

Bit pattern in the CiA control word (0x6040)								
Bit 15 ... 8	**Bit 7**	**Bit 6**	**Bit 5**	**Bit 4**	**Bit 3**	**Bit 2**	**Bit 1**	**Bit 0**
Reserved (specific)	**Reset fault**	**Operating mode dependent**			**Operation enabled**	**Activate quick stop**	**Establish readiness for operation**	**Switch-on**
X	0	X	X	X	1	1	1	1
X = state is not relevant								

15.1.5.4 Activate quick stop

This command activates quick stop when the operation is enabled.

- The drive is brought to a standstill irrespective of the setpoint specified with the deceleration (0x6085) set for quick stop.
- A changeover to the "Quick stop active" device status takes place.
- Then, state change to "Switch-on inhibited" parameter 0x605A "CiA: Quick stop mode".

If the operation is not enabled (device state "Ready to switch on" or "Switched on"), this command changes the state to "operation disabled".

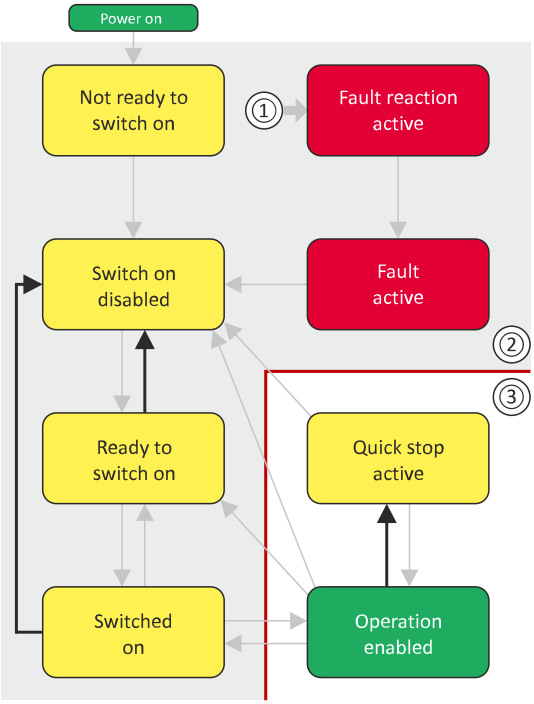

1 From all states
2 Power section disabled (pulse inhibit)
3 Power section enabled

Bit pattern in the CiA control word (0x6040)								
Bit 15 ... 8	**Bit 7**	**Bit 6**	**Bit 5**	**Bit 4**	**Bit 3**	**Bit 2**	**Bit 1**	**Bit 0**
Reserved (specific)	**Reset fault**	**Operating mode dependent**			**Operation enabled**	**Activate quick stop**	**Establish readiness for operation**	**Switch-on**
X	0	X	X	X	X	0	1	X
X = state is not relevant								

- During quick stop, the inverter executes the setpoint generation and no longer follows the setpoint defined by the network master.
- If several inverters execute a chained synchronous motion, the quick stop function has to be coordinated by the network master by means of a quick stop profile (master function). In this case, quick stop cannot be activated via the control bit 2.
- During the quick stop, the maximum current (0x6073) and the maximum torque (0x6072) are active. The lower of the two limits determines the motor torque output. The torque limits from 0x60E0 and 0x60E1 are not effective during the quick stop.

15.1.5.5 Disable operation

This command disables the enabled operation again.

- The pulse inhibit is set (pulses of the inverter are inhibited).
- If automatic brake operation is activated, the parameterized Brake closing time (0x2820:002) is observed: The system waits until the brake is applied before the pulse inhibit is set. In the CiA 402 "CiA: Velocity mode", the Brake closing time is not observed.
- A changeover to the "Switched on" device state takes place.

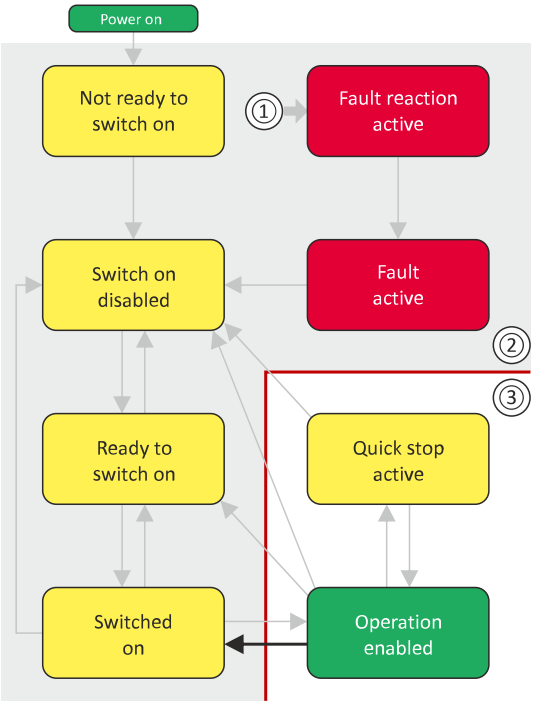

1 From all states
2 Power section disabled (pulse inhibit)
3 Power section enabled

Bit pattern in the CiA control word (0x6040)								
Bit 15 ... 8	**Bit 7**	**Bit 6**	**Bit 5**	**Bit 4**	**Bit 3**	**Bit 2**	**Bit 1**	**Bit 0**
Reserved (specific)	**Reset fault**	**Operating mode dependent**			**Operation enabled**	**Activate quick stop**	**Establish readiness for operation**	**Switch-on**
X	0	X	X	X	0	1	1	1
X = state is not relevant								

15.1.5.6 Pulse inhibit

This command disables the output stages of the inverter.

- The pulse inhibit is activated (pulses of the inverter are inhibited) if not already active.
- The motor has no torque.
- A changeover to the "Switch-on inhibited" device state takes place.

⚠ DANGER!

Uncontrolled motor movements by pulse inhibit.

If the motor has no torque, a load that is connected to motors without a holding brake may cause uncontrolled movements! Without a load, the motor will coast.

Possible consequences: Death or severe injuries

► Only operate the inverter under permissible load conditions.

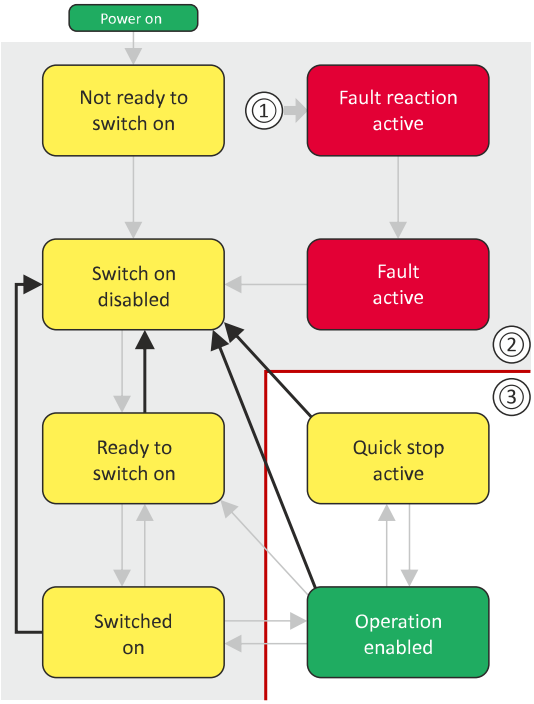

1 From all states
2 Power section inhibited (pulse inhibit)
3 Power section enabled

Bit pattern in the CiA control word (0x6040)								
Bit 15 ... 8	**Bit 7**	**Bit 6**	**Bit 5**	**Bit 4**	**Bit 3**	**Bit 2**	**Bit 1**	**Bit 0**
Reserved (specific)	**Reset fault**	**Operating mode dependent**			**Operation enabled**	**Activate quick stop**	**Establish readiness for operation**	**Switch-on**
X	0	X	X	X	X	X	0	X
X = state is not relevant								

15.1.5.7 Reset fault

This command resets a pending fault if the cause of the fault has been eliminated.

- The pulse inhibit remains active (pulses of the inverter are inhibited).
- A changeover to the "Switch-on inhibited" device status takes place (switch-on inhibit remains active).

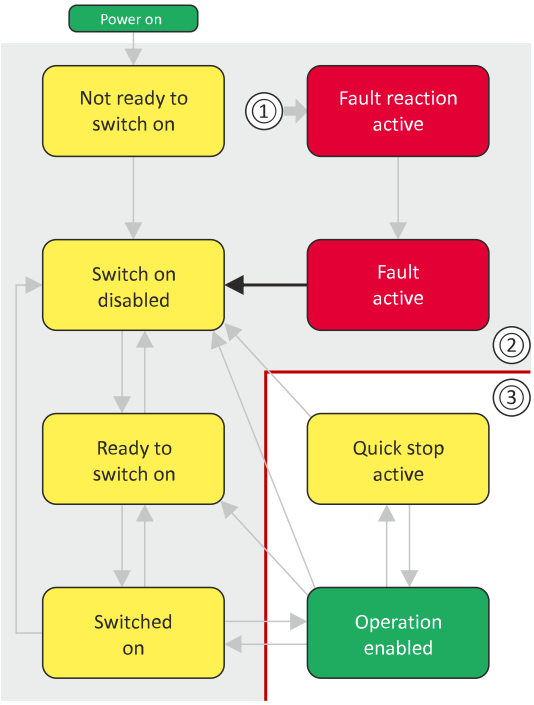

1 From all states
2 Power section inhibited (pulse inhibit)
3 Power section enabled

Bit pattern in the CiA control word (0x6040)								
Bit 15 ... 8	**Bit 7**	**Bit 6**	**Bit 5**	**Bit 4**	**Bit 3**	**Bit 2**	**Bit 1**	**Bit 0**
Reserved (specific)	**Reset fault**	**Operating mode dependent**			**Operation enabled**	**Activating quick stop**	**Establish readiness for operation**	**Switch-on**
X	0↗1	X	X	X	X	X	X	X
X = state is not relevant								

15.1.6 Device states

0x6041 (CiA status word) displays the current device status of the inverter.

Device status	Bit pattern in the CiA 402 status word (0x6041)							
	Bit 7	Bit 6	Bit 5	Bit 4	Bit 3	Bit 2	Bit 1	Bit 0
	Warning is active	Operation inhibited	Quick stop active	DC bus ready for operation	Fault active	Operation enabled	Switched on	Ready to switch on
Not ready to switch on 322	X	1	X	X	0	0	0	0
Switch-on inhibited 323	X	1	X	X	0	0	0	0
Ready to switch on 324	X	1	1	X	0	0	0	1
Switched on 325	X	1	1	X	0	0	1	1
Operation enabled 326	X	0	0	X	0	1	1	1
Quick stop active 327	X	0	1	X	0	1	1	1
Fault reaction active 328	X	0	X	X	1	1	1	1
Trouble 329	X	1	X	X	1	0	0	0
X = state is not relevant								

Status bit 7: "Warning active"

Status bit 7 indicates a warning.

- A warning does **not** cause a state change.
- Warnings do not need to be reset.

More Lenze-specific status bits (bit 8 ... 15)

Device status	Bit pattern in the CiA 402 status word (0x6041)							
	Bit 15	Bit 14	Bit 13	Bit 12	Bit 11	Bit 10	Bit 9	Bit 8
	Not active	Brake released	Following error is active	Drive follows setpoint selection	Internal limitation is active	Target position reached	Control word processed successfully	RPDOs deactivated
Brake applied	X	0	X	X	X	X	X	X
Brake released	X	1	X	X	X	X	X	X
Active	0	X	X	X	X	X	X	X
not active	1	X	X	X	X	X	X	X
X = state is not relevant								

Detailed information on the various device states can be found in the following sections.

Parameter

Address	Name / setting range / [default setting]		Information
0x6041	CiA status word • Read only		Mappable CiA status word with bit assignment according to device profile CiA 402.
	Bit 0	Ready to switch on	1 = drive ready to start
	Bit 1	Switched on	1 = drive switched-on
	Bit 2	Operation enabled	1 = operation enabled
	Bit 3	Fault	1 = fault or trouble active
	Bit 4	Voltage enabled	1 = DC bus ready for operation
	Bit 5	Quick stop disabled	0 = quick stop active
	Bit 6	Switch on disabled	1 = operation inhibited
	Bit 7	Warning	1 = warning active
	Bit 8	RPDOs disabled	1 = cyclic PDOs have been deactivated
	Bit 9	CiA control enabled	1 = inverter can receive commands via network. • Bit is not set in the operating mode 0x6060 = "MS: Velocity mode [-2]".
	Bit 10	Setpoint reached	1 = the actual speed is in the window.
	Bit 11	Internal limit active	1 = internal limitation of a setpoint active
	Bit 12	Operation mode specific	1 = operation enabled and no test mode activated. (no internal setpoint generation active.)
	Bit 13	Operation mode specific	1 ≡ following error active
	Bit 14	Brake released or switching	
	Bit 15	STO not active	0 = STO is active or impermissible state at the safe inputs SIA and SIB (inverter disabled) 1 = STO is not active (inverter enabled)

15.1.6.1 Not ready to switch on

This is the device state of the inverter directly after switching on the supply voltage.

- In this device status, the device is initialised.
- Communication is not possible yet.
- The inverter cannot be parameterised yet and no device commands can be carried out yet.
- The motor brake, if available, is closed.
- Operation is inhibited.

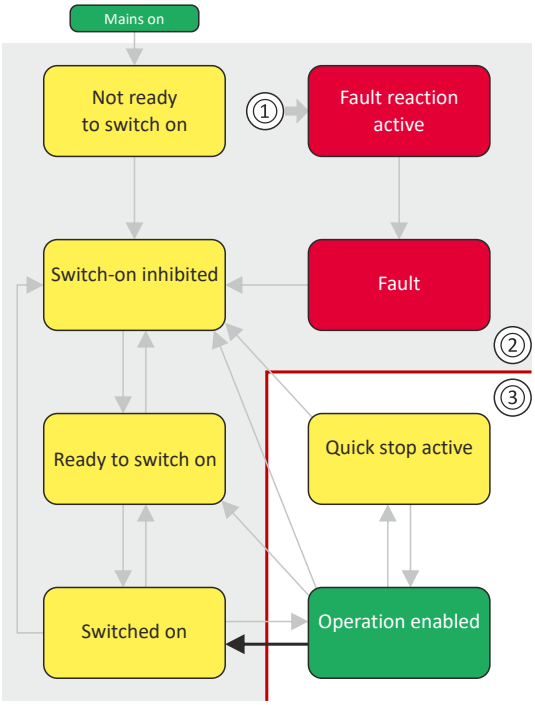

1 From all states
2 Power section inhibited (pulse inhibit)
3 Power section enabled

Bit pattern in the CiA status word (0x6041)								
Bit 15 ... 8	**Bit 7**	**Bit 6**	**Bit 5**	**Bit 4**	**Bit 3**	**Bit 2**	**Bit 1**	**Bit 0**
Reserved (specific)	**Warning active**	**Operation inhibited**	**Quick stop active**	**DC bus ready for operation**	**Fault active**	**Operation enabled**	**Switched on**	**Ready to switch on**
X	X	0	X	X	0	0	0	0
X = state is not relevant								

15.1.6.2 Switch-on inhibited

This is the device state of the inverter after the device has been initialised successfully.

A change to this state also takes place when the EtherCAT bus is in "Operational" state or the PDO communication via (Control selection) is deactivated.

- Process data monitoring is active.
- Communication is possible.
- The DC-bus voltage can be present.
- The inverter can be parameterised.
- If the internal holding brake control (0x2820:001) is active in the inverter, the motor brake is closed.
- Operation is inhibited.

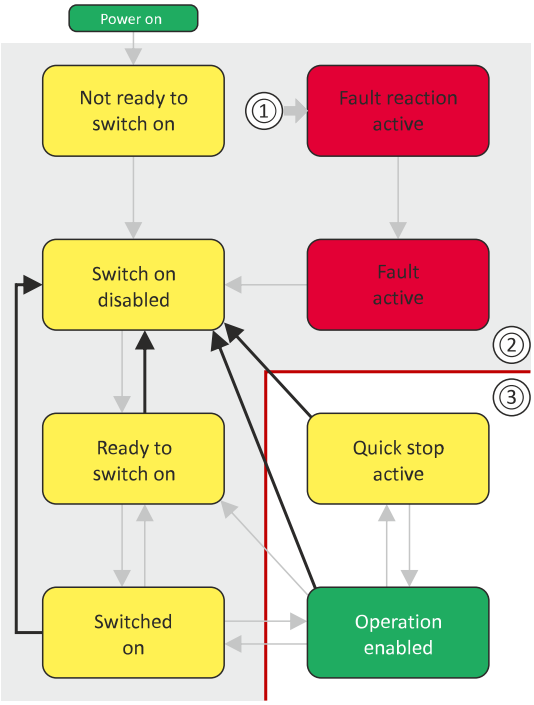

1 From all states
2 Power section inhibited (pulse inhibit)
3 Power section enabled

Bit pattern in the CiA status word (0x6041)								
Bit 15 ... 8	**Bit 7**	**Bit 6**	**Bit 5**	**Bit 4**	**Bit 3**	**Bit 2**	**Bit 1**	**Bit 0**
Reserved (specific)	**Warning active**	**Operation inhibited**	**Quick stop active**	**DC bus ready for operation**	**Fault active**	**Operation enabled**	**Switched on**	**Ready to switch on**
X	X	1	X	X	0	0	0	0
X = state is not relevant								

15.1.6.3 Ready to switch on

This is the device state of the inverter after the device has been initialised successfully and after the Switch-off command has been triggered.

A change to this device state also takes place if the "Switch-off" command was triggered in the states "Switched on" or "Enable operation".

- Process data monitoring is active.
- Communication is possible.
- The DC-bus voltage is available.
- The inverter can be parameterised.
- If the internal holding brake control (0x2820:001) is active in the inverter, the motor brake is closed.
- Operation is inhibited.

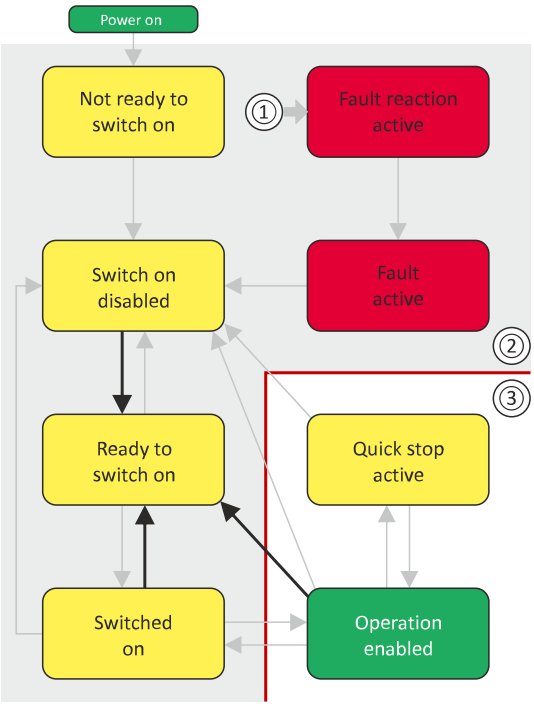

1 From all states
2 Power section inhibited (pulse inhibit)
3 Power section enabled

Bit pattern in the CiA status word (0x6041)								
Bit 15 ... 8	**Bit 7**	**Bit 6**	**Bit 5**	**Bit 4**	**Bit 3**	**Bit 2**	**Bit 1**	**Bit 0**
Reserved (specific)	**Warning active**	**Operation inhibited**	**Quick stop active**	**DC bus ready for operation**	**Fault active**	**Operation enabled**	**Switched on**	**Ready to switch on**
X	X	0	1	X	0	0	0	1
X = state is not relevant								

15.1.6.4 Switched on

This is the device state of the inverter after the "Switch on" command has been triggered in the "Ready to switch on" device state.

- Process data monitoring is active.
- Communication is possible.
- The DC-bus voltage is available.
- The inverter can be parameterized.
- If the internal holding brake control (0x2820:001) is active in the inverter, the motor brake is closed.
- Operation is disabled.

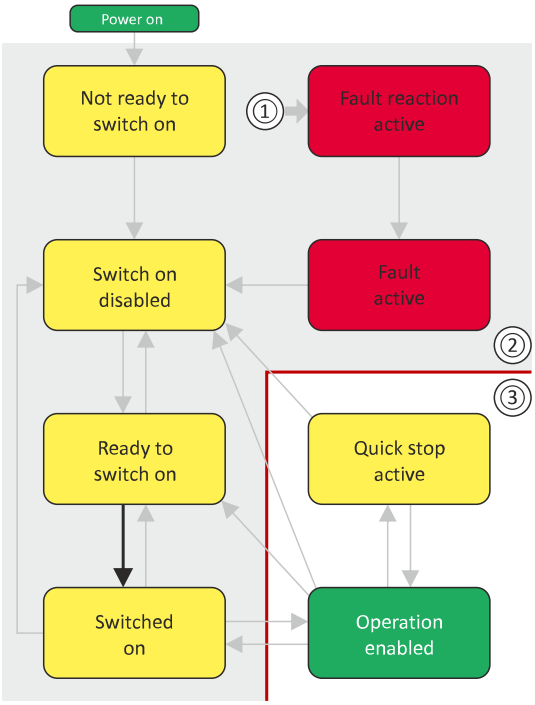

1 From all states
2 Power section disabled (pulse inhibit)
3 Power section enabled

Bit pattern in the CiA status word (0x6041)								
Bit 15 ... 8	**Bit 7**	**Bit 6**	**Bit 5**	**Bit 4**	**Bit 3**	**Bit 2**	**Bit 1**	**Bit 0**
Reserved (specific)	**Warning active**	**Operation disabled**	**Quick stop active**	**DC bus ready for operation**	**Fault active**	**Operation enabled**	**Switched on**	**Ready to switch on**
X	X	0	1	X	0	0	1	1
X = stateis not relevant								

15.1.6.5 Operation enabled

This device state represents normal operation. Operation in the selected operating mode is enabled and no errors have occurred.

- Only the parameters of the inverter can be changed that do not require an inverter disable.
- A motor brake, if any, is open if the automatic operation of the holding brake control is activated (0x2820:001 = 0).
- The drive control is active.

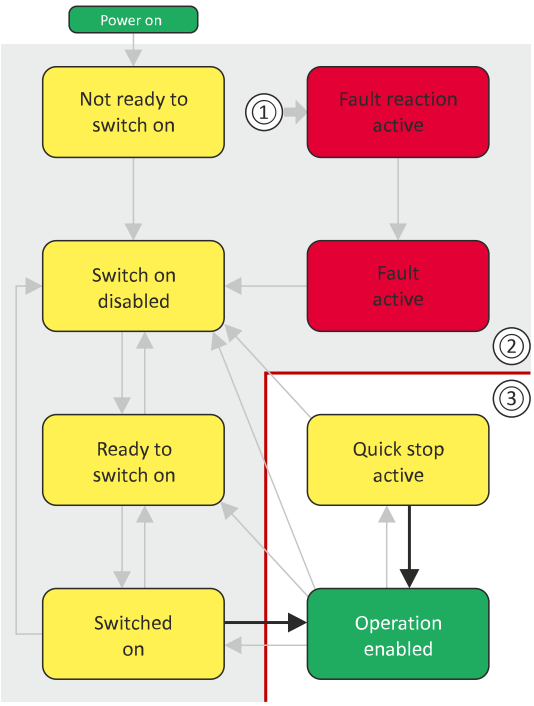

1 From all states
2 Power section inhibited (pulse inhibit)
3 Power section enabled

Bit pattern in the CiA status word (0x6041)								
Bit 15 ... 8	**Bit 7**	**Bit 6**	**Bit 5**	**Bit 4**	**Bit 3**	**Bit 2**	**Bit 1**	**Bit 0**
Reserved (specific)	**Warning active**	**Operation inhibited**	**Quick stop active**	**DC bus ready for operation**	**Fault active**	**Operation enabled**	**Switched on**	**Ready to switch on**
X	X	0	1	X	0	1	1	1
X = state is not relevant								

15.1.6.6 Quick stop active

This device state is active if quick stop is executed or active.

- Only the parameters of the inverter can be changed that do not require an inverter disable.
- If the internal holding brake control (0x2820:001) is active in the inverter, the motor brake is closed.
- The drive control is active.

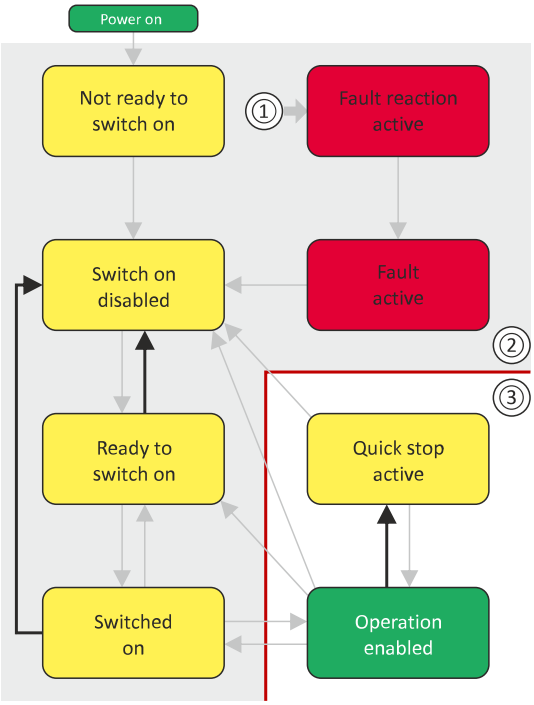

1 From all states
2 Power section inhibited (pulse inhibit)
3 Power section enabled

Bit pattern in the CiA status word (0x6041)								
Bit 15 ... 8	**Bit 7**	**Bit 6**	**Bit 5**	**Bit 4**	**Bit 3**	**Bit 2**	**Bit 1**	**Bit 0**
Reserved (specific)	**Warning active**	**Operation inhibited**	**Quick stop active**	**DC bus ready for operation**	**Fault active**	**Operation enabled**	**Switched on**	**Ready to switch on**
X	X	0	0	X	0	1	1	1
X = state is not relevant								

The "Enable operation" command stops an active quick stop.

15.1.6.7 Fault reaction active

This device state becomes active if a minor fault occurs. This means that the inverter is still able to drive the motor in a controlled way.

- The inverter is brought to a standstill irrespective of the setpoint specified with the deceleration (0x6085) set for quick stop.

  If the inverter is at standstill, a change to the "Trouble" device state take place automatically.
- Only the parameters of the inverter can be changed that do not require an inverter disable.
- If the internal holding brake control (0x2820:001) is active in the inverter, the motor brake is closed.
- The drive control is active.

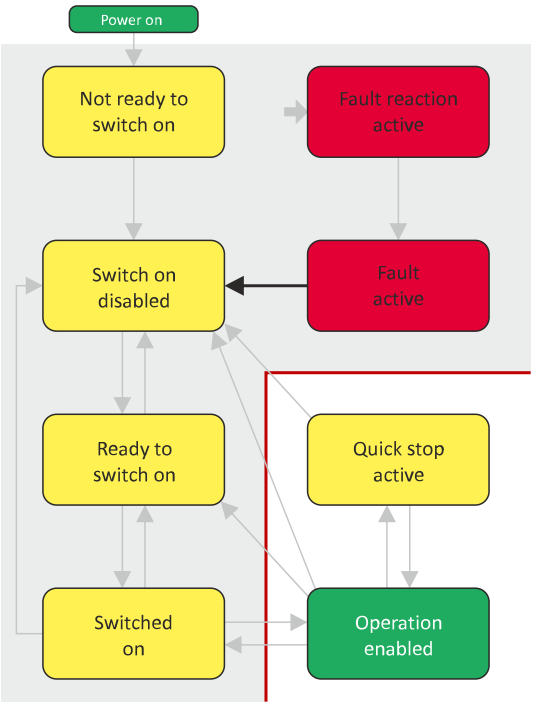

1 From all states
2 Power section inhibited (pulse inhibit)
3 Power section enabled

Bit pattern in the CiA status word (0x6041)								
Bit 15 ... 8	**Bit 7**	**Bit 6**	**Bit 5**	**Bit 4**	**Bit 3**	**Bit 2**	**Bit 1**	**Bit 0**
Reserved (specific)	**Warning active**	**Operation inhibited**	**Quick stop active**	**DC bus ready for operation**	**Fault active**	**Operation enabled**	**Switched on**	**Ready to switch on**
X	X	0	X	X	1	1	1	1
X = state is not relevant								

15.1.6.8 Trouble

This device state becomes active if a serious system fault occurs. This means that the inverter is no longer able to drive the motor in a controlled way. The inverter is switched off immediately.

- The pulse inhibit is active (pulses of the inverter are inhibited).
- The motor is torqueless.
- The motor brake, if available, is closed.
- Operation is inhibited.
- The inverter can be parameterised.

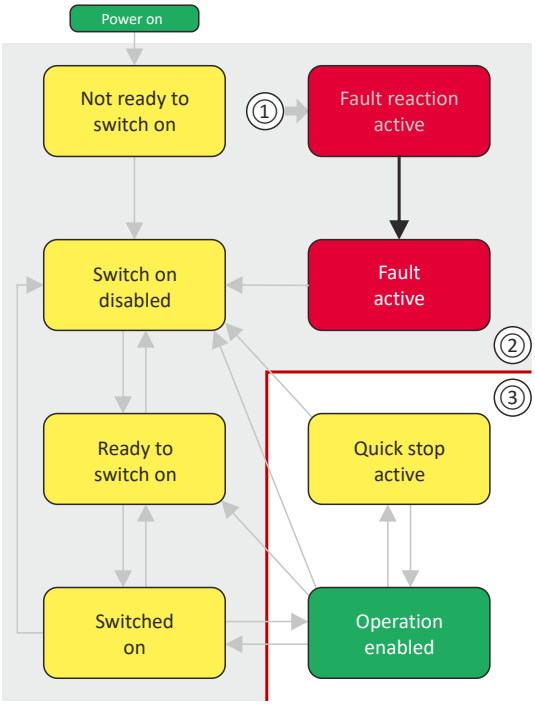

1 From all states
2 Power section inhibited (pulse inhibit)
3 Power section enabled

Bit pattern in the CiA status word (0x6041)								
Bit 15 ... 8	**Bit 7**	**Bit 6**	**Bit 5**	**Bit 4**	**Bit 3**	**Bit 2**	**Bit 1**	**Bit 0**
Reserved (specific)	**Warning active**	**Operation inhibited**	**Quick stop active**	**DC bus ready for operation**	**Fault active**	**Operation enabled**	**Switched on**	**Ready to switch on**
X	X	0	X	X	1	0	0	0
X = state is not relevant								

This device state can only be left with the "Reset fault" command if the cause of the fault has been removed.

15.1.7 Operation mode "Manual Jog"

Parameter

Address	Name / setting range / [default setting]	Information
0x2C67:001	MOL settings for 0x6060: Current setpoint 1 0 ... [**71**] ... 200 %	
0x2C67:002	MOL settings for 0x6060: Frequency 1 -500.0 ... [**1.0**] ... 500.0 Hz	
0x2C67:003	MOL settings for 0x6060: Current 1 - ramp time 10 ... [**10**] ... 1000 ms	
0x2C67:004	MOL settings for 0x6060: Frequency 1 - ramp time 0 ... [**200**] ... 10000 ms	
0x2C67:005	MOL settings for 0x6060: Starting angle 1 -179.9 ... [**0.0**] ... 179.9 °	
0x2C67:006	MOL settings for 0x6060: Stopping time 1 0.0 ... [**10000.0**] ... 10000.0 s • Setting can only be changed if the inverter is disabled.	
0x2C67:011	MOL settings for 0x6060: Current setpoint 2 0 ... [**71**] ... 200 %	
0x2C67:012	MOL settings for 0x6060: Frequency 2 -500.0 ... [**5.0**] ... 500.0 Hz	
0x2C67:013	MOL settings for 0x6060: Current 2 - ramp time 10 ... [**10**] ... 1000 ms	
0x2C67:014	MOL settings for 0x6060: Frequency 2 - ramp time 0 ... [**1000**] ... 10000 ms	
0x2C67:015	MOL settings for 0x6060: Starting angle 2 -179.9 ... [**0.0**] ... 179.9 °	
0x2C67:016	MOL settings for 0x6060: Stopping time 2 0.0 ... [**10000.0**] ... 10000.0 s • Setting can only be changed if the inverter is disabled.	

15.2 CANopen

CANopen® is an internationally approved communication protocol which is designed for commercial and industrial automation applications.

- CANopen® is a registered community trademark of the CAN in Automation e. V user organisation.
- Detailed information on CANopen can be found on the web page of the CAN in Automation (CiA) user organisation: http://www.can-cia.org
- Information about the dimensioning of a CANopen network can be found in the configuration document for the inverter.

Preconditions:

- The inverter is equipped with the "CANopen" network module.
- The network is terminated by one bus terminating resistor each at the first and last physical node. See "Typical topologies".
- Selection of the technology application in the inverter with parameter ▸ 0x4000 > 1.
- The required EDS device description files for the inverters to be put into operation are loaded in the master (PLC).
  - Download of EDS files

Device description files for Lenze products can be found on the Internet: www.Lenze.com → Downloads → Product-related Application Knowledge Base articles

Details

- The implementation of the CANopen communication profile (CiA DS301, version 4.02) enables baud rates of 20 kbps to 1 Mbps.
- For easy network connection, the inverter provides a predefined PDO mapping.

Typical topology

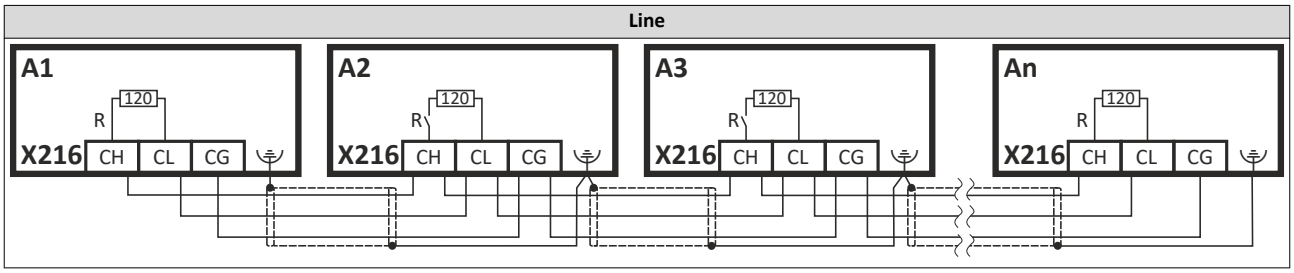

15.2.1 Supported CANopen objects

The inverter can be parameterized with Lenze parameters as well as with the manufacturer-independent "CANopen objects". For fully CANopen-compliant communication, only the CANopen objects may be used for parameterization.

The CANopen objects described here are defined in the CANopen specification DS301, V4.02. The mapping to Lenze parameters is listed in the following table in the "Info" column.

Supported CANopen objects

Address	Name / setting range / [default setting]	Information
0x1000	Device type • Read only	CANopen device profile according to CANopen specification CiA 301/CiA 402 Specifies the type of axis: 0x01020000 = Servo single axis
0x1001	Error register • Read only	Bit-coded error status. • Bit 0 is set if an error is active.
0x1003	Pre-defined error field	Error list display
0x1003:000	Pre-defined error field: Number of errors • Read only	Number of errors
0x1003:001 ... 0x1003:010	Pre-defined error field: Standard error field 1 ... Pre-defined error field: Standard error field 10 • Read only	Error messages • The error messages (U32) consist of a 16-bit error code and a 16-bit manufacturer-specific information field.
0x1005	COB-ID SYNC 0x00000000 ... **[0x00000080]** ... 0xFFFFFFFF	Identifier for sync telegram • See Lenze image: ▸ 0x2304:001
0x1006	Communication cyclic period 0 ... **[0]** ... 65535000 µs	Cycle time for sync telegrams • See Lenze image: ▸ 0x2304:002
0x1008	Manufacturer device name • Read only	Display of the manufacturer device name
0x1009	Manufacturer hardware version • Read only	Display of the manufacturer hardware version of the CANopen module
0x100A	Manufacturer software version • Read only	Display of the manufacturer software version
0x1014	COB-ID Emergency telegram (EMCY) • Read only	Display of the identifier for emergency telegrams • See Lenze image: ▸ 0x2302:003
0x1015	Inhibit time EMCY	Blocking time which can be set in order to limit the bus load in the case of emergency telegrams following quickly in succession. • See Lenze image: ▸ 0x2304:003
0x1016	Consumer heartbeat time	Node ID and heartbeat time of the max. 4 nodes to be monitored • See Lenze image: ▸ 0x2304:004 • See Lenze image: ▸ 0x2304:005 • See Lenze image: ▸ 0x2304:006 • See Lenze image: ▸ 0x2304:007
0x1017	Producer heartbeat time	Time interval for the transmission of the heartbeat telegram to the consumer(s). • See Lenze image: ▸ 0x2304:020
0x1018	Identity object	Inverter data
0x1018:001	Identity object: Vendor ID • Read only	Manufacturer's identification number Lenze = 0x0000003B
0x1018:002	Identity object: Product ID • Read only	Inverter product code
0x1018:003	Identity object: Revision number • Read only	Main and subversion of the firmware
0x1018:004	Identity object: Serial number • Read only	Serial number of the inverter
0x1029	Error behavior	Behavior in case of communication errors
0x1029:001	Error behavior: Communication error	Selection to which NMT state the inverter is to change automatically in the event of a communication error. • See Lenze image: ▸ 0x2304:021
0x1200	SDO1 server parameter	Setting the identifiers for the SDO server channel 1
0x1200:001	SDO1 server parameter: COB-ID client > server (rx)	Specification of the receive identifier for SDO server channel 1. • Identifier = node address 0x2302:001 + 0x600 (cannot be changed)
0x1200:002	SDO1 server parameter: COB-ID server > client (tx)	Specification of the transmit identifier for SDO server channel 1. • Identifier = node address 0x2302:001 + 0x580 (cannot be changed)
0x1201	SDO2 server parameter	Setting the identifiers for the SDO server channel 2 • See Lenze image: ▸ 0x2304:031 • See Lenze image: ▸ 0x2304:032
0x1400	RPDO1 communication parameter	Setting the communication parameters for RPDO1 • See Lenze image: ▸ 0x2304:041 • See Lenze image: ▸ 0x2304:042 • See Lenze image: ▸ 0x2304:045

Address	Name / setting range / [default setting]	Information
0x1401	RPDO2 communication parameter	Setting the communication parameters for RPDO2 • See Lenze image: ▸ 0x2304:051 • See Lenze image: ▸ 0x2304:052 • See Lenze image: ▸ 0x2304:055
0x1402	RPDO3 communication parameter	Setting the communication parameters for RPDO3 • See Lenze image: ▸ 0x2304:061 • See Lenze image: ▸ 0x2304:062 • See Lenze image: ▸ 0x2304:065
0x1403	RPDO4 communication parameter	Setting the communication parameters for RPDO4 • See Lenze image: ▸ 0x2304:071 • See Lenze image: ▸ 0x2304:072 • See Lenze image: ▸ 0x2304:075
0x1600	RPDO1 mapping parameter	Data mapping for RPDO1 ... RPDO4 • Description: ▸ Data mapping 📖 344
0x1601	RPDO2 mapping parameter	
0x1602	RPDO3 mapping parameter	
0x1603	RPDO4 mapping parameter	
0x1800	TPDO1 communication parameter	Setting the communication parameters for TPDO1 • See Lenze image: ▸ 0x2304:081 • See Lenze image: ▸ 0x2304:082 • See Lenze image: ▸ 0x2304:083 • See Lenze image: ▸ 0x2304:085
0x1801	TPDO1 communication parameter	Setting the communication parameters for TPDO2 • See Lenze image: ▸ 0x2304:091 • See Lenze image: ▸ 0x2304:092 • See Lenze image: ▸ 0x2304:093 • See Lenze image: ▸ 0x2304:095
0x1802	TPDO1 communication parameter	Setting the communication parameters for TPDO3 • See Lenze image: ▸ 0x2304:101 • See Lenze image: ▸ 0x2304:102 • See Lenze image: ▸ 0x2304:103 • See Lenze image: ▸ 0x2304:105
0x1803	TPDO1 communication parameter	Setting the communication parameters for TPDO4 • See Lenze image: ▸ 0x2304:111 • See Lenze image: ▸ 0x2304:112 • See Lenze image: ▸ 0x2304:113 • See Lenze image: ▸ 0x2304:115
0x1A00	TPDO1 mapping parameter	Data mapping for TPDO1 ... TPDO4 • Description: ▸ Data mapping 📖 344
0x1A01	TPDO2 mapping parameter	
0x1A02	TPDO3 mapping parameter	
0x1A03	TPDO4 mapping parameter	

15.2.2 Commissioning

In the following, the steps required for controlling the inverter via CANopen are described.

Required commissioning steps

How to set up the controller via CANopen:

1. **Required settings:**
   1. Activate bus terminating resistor at the physically first and last node in the network.
      ▸ Activating the bus terminating resistor 📖 336
   2. Set the CANopen node setting. ▸ Node address setting 📖 336

      Each network node must be provided with a unique node address.
   3. Set CANopen baud rate. ▸ Baud rate setting 📖 336

      Default setting: 500 = kbps
   4. Set PDOs. ▸ Process data transfer 📖 338
   5. Select technology application: ▸ 0x4000 > 1.
   6. Select interface: ▸ 0x4001 = [0] Fieldbus network.
2. **Optional settings**
   1. Configure inverter as “mini master”. ▸ Configuring the device as mini master 📖 337

      Required if the initialization of the CANopen network and the associated status change from "Pre-Operational" to "Operational" is not effected by a higher-level CANopen master (PLC).
   2. Change response of the inverter when RPDO time monitoring is triggered. ▸ Error responses 📖 351

      Default setting: In case of missing RPDOs, an error is triggered.
3. **Final settings**
   1. Save parameter settings: 0x2022:003 = = [1] On / start.
   2. Restart communication. ▸ Restarting or stopping the communication 📖 337

The inverter can now be controlled via CANopen.

15.2.3 Basic setting and options

15.2.3.1 Activating the bus terminating resistor

The bus terminating resistor must be activated at the physically first and last node in the network.

To do this, set the jumper to the "R" position on the plug connector.

15.2.3.2 Node address setting

Each network node must be provided with a unique node address.

- Set node address: ▸ 0x2301:001.
- Display active node address: ▸ 0x2302:001.

Parameter

Address	Name / setting range / [default setting]	Information
0x2301:001	CANopen settings: Node ID 1 ... [**1**] ... 127	

The change becomes effective only after saving the parameter set and restarting the communication. ▸ Restarting or stopping the communication 🕮 337

15.2.3.3 Baud rate setting

All network nodes must be set to the same baud rate.

- Set baud rate: ▸ 0x2301:002.
- Display active baud rate: ▸ 0x2302:002.

Parameter

Address	Name / setting range / [default setting]		Information
0x2301:002	CANopen settings: Baud rate		
	0	Automatic	
	1	20 kbps	
	2	50 kbps	
	3	125 kbps	
	4	250 kbps	
	5	**500 kbps**	
	6	800 kbps	
	7	1 Mbps	

The change becomes effective only after saving the parameter set and restarting the communication. ▸ Restarting or stopping the communication 🕮 337

15.2.3.4 Configuring the device as mini master

If the initialisation of the CANopen network and the associated status change from "Pre-Operational" to "Operational" is not effected by a master (PLC), the inverter can instead be defined as a "mini master" to execute this task.

Details

In the default setting, the inverter is configured as a slave and waits for the NMT telegram "Start Remote Node" from the CANopen master (PLC) after being switched on in the "Pre-Operational" state.

If the initialization of the CANopen network and the associated change of state from "Pre-Operational" to "Operational" is not taken over by a higher-level CANopen master (PLC), an inverter must be configured as a mini-master.

Configured as mini master, the inverter changes to the "Operational" state after being switched on and sets all nodes connected to the CAN bus (broadcast telegram) to the "Operational" communication state using the "Start Remote Node" NMT telegram after the "Start remote delay time" has elapsed. Only this communication status enables data exchange via the process data objects.

- Activate mini master: ▸ 0x2301:003 = [1]
- Delay time until the NMT telegram "Start Remote Node" is sent: ▸ 0x2301:004

Parameter

Address	Name / setting range / [default setting]		Information
0x2301:003	CANopen settings: Slave/Master		1 = after mains switching, inverter starts as mini-master.
	0	**Slave**	
	1	Mini-master	
0x2301:004	CANopen settings: Start remote delay 0 ... [**3000**] ... 65535		If the inverter has been defined as mini-master, a delay time can be set here, which has to elapse after mains switching before the inverter deposits the "Start Remote Node" NMT telegram on the CAN bus.

The change becomes effective only after saving the parameter set and restarting the communication. ▸ Restarting or stopping the communication 🕮 337

15.2.3.5 Restarting or stopping the communication

After changes to the interface configuration (parameters 0x2301:001 ... 0x2301:007), the communication must be restarted for the new settings to take effect.

Ways to restart communication:

- Switch the inverter off and on again.
- 0x2300 = "Restart with current values [1]".

Parameter

Address	Name / setting range / [default setting]		Information
0x2300	CANopen communication		Restart / stop communication. • After successful execution, the value 0 is shown.
	0	**No action/no error**	Only status feedback
	1	Restart with current values	Restart communication with the current values of the CANopen parameters.
	2	Restart with default values	Restart communication with the standard values of the CANopen parameters.
	5	Stop network communication	Stop communication.
	10	In progress	Only status feedback
	11	Action cancelled	
	12	Fault	

15.2.4 Process data transfer

Process data objects (PDOs) are used for the cyclic transmission of (process) data via CANopen. PDOs only contain data and an identifier. They do not contain any information about the sender or receiver and are therefore very efficient.

Details

- Four process data channels (PDO1 ... PDO4) are available.
- Process data objects which the inverter receives via the network are referred to as "Receive PDOs" (RPDOs).
- Process data objects which the inverter sends via the network are referred to as "Transmit PDOs" (TPDOs).
- The maximum length of a PDO is 8 bytes (4 data words).
- Each PDO requires a unique identifier ("COB-ID") for the purpose of identification within the network.
- Communication parameters (such as the transmission type and cycle time) for each PDO can be set freely and independently of the settings of other PDOs
- Default setting:
  - RPDO1 and TPDO1 are activated.
  - RPDO2 ... RPDO4 and TPDO2 ... TPDO4 are deactivated.
- The respective mapping cannot be changed.

Set RPDO

How to change the communication parameters for RPDO1:

1. Set RPDO1 to “invalid": RPDO1 - COB-ID 0x2304:041, Bit31 = 1.
2. If appropriate, change timeout time: RPDO1 - Event timer 0x2304:045.

   Default setting: 100 ms
3. If necessary, change the transmission of the process data: RPDO1 - Transmission type 0x2304:042.

   Default setting: 255 (cyclic or event-controlled)
4. If appropriate, change identifier and reset RPDO1 to "valid" (bit31 = “0”): RPDO1 - COB-ID 0x2304:041.

   Default setting: Identifier = basic identifier (0x200) + node address (hex)

   Example: Node address = 10 (0xA)

   Identifier = 0x200 + 0xA = 0x0000020A

RPDO1 is enabled again with the new settings.

Set TPDO

How to change the communication parameters for TPDO1:

1. Set TPDO1 to “invalid": TPDO1 - COB-ID 0x2304:081, Bit31 = 1.
2. If required, change timeout: TPDO1 - Event timer 0x2304:085.

   Default setting: 20 ms
3. If necessary, change the transmission of the process data: TPDO1 - Transmission type 0x2304:082.

   Default setting: 255 (cyclic)
4. If required, Change identifier and reset TPDO1 to "valid" (bit31 = “0”): TPDO1 - COB-ID 0x2304:081.

   Default setting: Identifier = basic identifier (0x40000180) + node address (hex)

   Example: Node address = 10 (0xA)

   Identifier = 0x40000180 + 0xA = 0x4000018A

TPDO1 is enabled again with the new settings.

Transmission type

Process data objects are transmitted event-controlled or time-controlled. Combinations of the different transmission types are also possible:

- Event-controlled: The PDO is sent when a special device-internal event has occurred, e.g. change of the data content of the TPDO or expiry of a transmission cycle time.
- Synchronous: After the inverter has received a sync telegram (COB-ID 0x80), it sends a TPDO or receives an RPDO.
- Cyclic: The PDOs are transmitted cyclically after the transmission cycle time has elapsed.
- Via RTR (TPDO only): Another device triggers the transmission of a TPDO with a request via a data request telegram RTR (Remote Transmit Request). For this purpose, the data requestor (e.g. master) sends an RTR with the COB ID of the TPDO that is to be requested to transmit. The receiver detects the RTR and transmits.

Transmission type	PDO transmission	Description
0	Synchronous and acyclic	• The PDO is transmitted event-controlled with a sync if the PDO data has changed.
1 ... 240	Synchronous and cyclic	• Selection n = 1: The PDO is transmitted with every sync. • Selection 1 < n ≤ 240: The PDO is transmitted at every nth sync.
241 ... 251	-	Reserved
252 (only TPDO)	Synchronous - RTR only	• A sync request from the sync master updates the TPDO. • The TPDO is not sent until it receives an RTR request.
253 (only TPDO)	Asynchronous - RTR only	• The TPDO is updated when a change is made. • The TPDO is not sent until it receives an RTR request.
254	Asynchronous and cyclic	• The PDO is sent and received in the set cycle time. • Changing the PDO data has no effect.
255	Asynchronous and cyclic OR acyclic	• The PDO is sent and received in the set cycle time. • In addition, PDO data is sent and received each time it is changed. • The PDO is event-controlled and transmitted cyclically.

Synchronization of PDOs with sync telegram

With cyclic transmission, one or more PDOs are sent or received at fixed time intervals. For the synchronization of the cyclic process data the special "Sync telegram" is used.

- The sync telegram is the trigger for transmitting process data from the slaves to the master and for transferring process data from the master to the slaves.
- The response to a sync telegram is determined by the transmission type selected.

Set up sync telegram:

- Specify identifier:
  - All inverters are set to the sync telegram with identifier 0x80 according to CANopen specification.
  - If sync telegrams are only to be received by specific nodes, their identifiers can be specified with a value of up to and including 0x07FF.
  - The identifier may only be changed if the inverter does not send any sync telegrams (0x2304:001, Bit 30 = "0").
- Generate sync telegram:
  - Activate transmission: 0x2304:001, Bit 30 = 1
  - Set transmission cycle: 0x2304:002

Sync telegram assignment

8. Byte (data 4)		7. Byte (data 3)	6. Byte (data 2)	5. Byte (data 1)
Bit 31	Bit 30	Bit 29 ... Bit 11		Bit 10 ... Bit 0
x	0/1	Extended Identifier (not supported) Bit 29 ... Always set bit 11 to "0".		11-bit identifier

Parameter

Address	Name / setting range / [default setting]		Information
0x2301:006	CANopen settings: COB-ID Configuration - PDO		Selection of the process for assigning the identifiers. Irrespective of this selection, these are the following bits of the identifiers: • Bit 30: "RTR not allowed" (only in case of TPDO) • Bit 31: "PDO invalid"
	0	**Base + node-ID**	Identifier = set (basic) identifiers + set node address
	1	Freely configurable	Identifier = set identifiers
	2	Legacy base + node ID	Identifier = inherited (basic) identifier + set node address
0x2304:001	CANopen settings: SYNC - COB-ID 0x00000000 ... [**0x00000080**] ... 0xFFFFFFFF		Image of the CANopen object 0x1005
	Bit 0	COB-ID bit 0	
	Bit 1	COB-ID bit 1	
	Bit 2	COB-ID bit 2	
	Bit 3	COB-ID bit 3	
	Bit 4	COB-ID bit 4	
	Bit 5	COB-ID bit 5	
	Bit 6	COB-ID bit 6	
	Bit 7	COB-ID bit 7	
	Bit 8	COB-ID bit 8	
	Bit 9		
	Bit 10	COB-ID bit 10	Image of the CANopen object 0x1005
	Bit 30	Enable sync	
0x2304:002	CANopen settings: Communication cyclic period 0 ... [**0**] ... 65535000 µs		Image of the CANopen object 0x1006
0x2304:041	CANopen settings: RPDO1 - COB-ID 0x00000000 ... [**0x00000201**] ... 0xFFFFFFFF		Image of the CANopen object 0x1400:001
	Bit 0	COB-ID bit 0	
	Bit 1	COB-ID bit 1	
	Bit 2	COB-ID bit 2	
	Bit 3	COB-ID bit 3	
	Bit 4	COB-ID bit 4	
	Bit 5	COB-ID bit 5	
	Bit 6	COB-ID bit 6	
	Bit 7	COB-ID bit 7	
	Bit 8	COB-ID bit 8	
	Bit 9	COB-ID bit 9	
	Bit 10	COB-ID bit 10	
	Bit 31	PDO invalid	
0x2304:042	CANopen settings: RPDO1 - Transmission type 0 ... [**255**] ... 255		Image of the CANopen object 0x1400:002
0x2304:045	CANopen settings: RPDO1 - Event timer 0 ... [**100**] ... 65535 ms		Image of the CANopen object 0x1400:005
0x2304:051	CANopen settings: RPDO2 - COB-ID 0x00000000 ... [**0x80000301**] ... 0xFFFFFFFF		Image of the CANopen object 0x1401:001
	Bit 0	COB-ID bit 0	
	Bit 1	COB-ID bit 1	
	Bit 2	COB-ID bit 2	
	Bit 3	COB-ID bit 3	
	Bit 4	COB-ID bit 4	
	Bit 5	COB-ID bit 5	
	Bit 6	COB-ID bit 6	
	Bit 7	COB-ID bit 7	
	Bit 8	COB-ID bit 8	
	Bit 9	COB-ID bit 9	
	Bit 10	COB-ID bit 10	
	Bit 31	PDO invalid	

Address	Name / setting range / [default setting]		Information
0x2304:052	CANopen settings: RPDO2 - Transmission type 0 ... [**255**] ... 255		Image of the CANopen object 0x1401:002
0x2304:055	CANopen settings: RPDO2 - Event timer 0 ... [**100**] ... 65535 ms		Image of the CANopen object 0x1401:005
0x2304:061	CANopen settings: RPDO3 - COB-ID 0x00000000 ... [**0x80000401**] ... 0xFFFFFFFF		Image of the CANopen object 0x1402:001
	Bit 0	COB-ID bit 0	
	Bit 1	COB-ID bit 1	
	Bit 2	COB-ID bit 2	
	Bit 3	COB-ID bit 3	
	Bit 4	COB-ID bit 4	
	Bit 5	COB-ID bit 5	
	Bit 6	COB-ID bit 6	
	Bit 7	COB-ID bit 7	
	Bit 8	COB-ID bit 8	
	Bit 9	COB-ID bit 9	
	Bit 10	COB-ID bit 10	
	Bit 31	PDO invalid	
0x2304:062	CANopen settings: RPDO3 - Transmission type 0 ... [**255**] ... 255		Image of the CANopen object 0x1402:002
0x2304:065	CANopen settings: RPDO3 - Event timer 0 ... [**100**] ... 65535 ms		Image of the CANopen object 0x1402:005
0x2304:071	CANopen settings: RPDO4 - COB-ID 0x00000000 ... [**0x80000501**] ... 0xFFFFFFFF		RPDO4: Identifier Image of the CANopen object 0x1403:001 How to change the identifier: 1. Set PDO to "invalid": Set bit 31 to "1". 2. Change identifier and reset PDO to "valid" (bit 31 = "0").
	Bit 0	COB-ID bit 0	
	Bit 1	COB-ID bit 1	
	Bit 2	COB-ID bit 2	
	Bit 3	COB-ID bit 3	
	Bit 4	COB-ID bit 4	
	Bit 5	COB-ID bit 5	
	Bit 6	COB-ID bit 6	
	Bit 7	COB-ID bit 7	
	Bit 8	COB-ID bit 8	
	Bit 9	COB-ID bit 9	
	Bit 10	COB-ID bit 10	
	Bit 31	PDO invalid	
0x2304:072	CANopen settings: RPDO4 - Transmission type 0 ... [**255**] ... 255		RPDO4: Transmission type in compliance with DS301 V4.02 Image of the CANopen object 0x1403:002
0x2304:075	CANopen settings: RPDO4 - Event timer 0 ... [**100**] ... 65535 ms		RPDO4: Timeout for monitoring data reception. Image of the CANopen object 0x1403:005
0x2304:081	CANopen settings: TPDO1 - COB-ID 0x00000000 ... [**0x40000181**] ... 0xFFFFFFFF		Image of the CANopen object 0x1800:001
	Bit 0	COB-ID bit 0	
	Bit 1	COB-ID bit 1	
	Bit 2	COB-ID bit 2	
	Bit 3	COB-ID bit 3	
	Bit 4	COB-ID bit 4	
	Bit 5	COB-ID bit 5	
	Bit 6	COB-ID bit 6	
	Bit 7	COB-ID bit 7	
	Bit 8	COB-ID bit 8	
	Bit 9	COB-ID bit 9	
	Bit 10	COB-ID bit 10	
	Bit 30	RTR not allowed	
	Bit 31	PDO invalid	
0x2304:082	CANopen settings: TPDO1 - Transmission type 0 ... [**255**] ... 255		Image of the CANopen object 0x1800:002

Address	Name / setting range / [default setting]	Information
0x2304:083	CANopen settings: TPDO1 - Inhibit time 0.0 ... [**0.0**] ... 6553.5 ms	TPDO1: minimum time between the transmission of two identical PDOs in compliance with DS301 V4.02 Image of the CANopen object 0x1800:003 • The set time is rounded off internally to whole ms.
0x2304:085	CANopen settings: TPDO1 - Event timer 0 ... [**20**] ... 65535 ms	Image of the CANopen object 0x1800:005
0x2304:091	CANopen settings: TPDO2 - COB-ID 0x00000000 ... [**0xC0000281**] ... 0xFFFFFFFF	Image of the CANopen object 0x1801:001
	Bit 0 | COB-ID bit 0	
	Bit 1 | COB-ID bit 1	
	Bit 2 | COB-ID bit 2	
	Bit 3 | COB-ID bit 3	
	Bit 4 | COB-ID bit 4	
	Bit 5 | COB-ID bit 5	
	Bit 6 | COB-ID bit 6	
	Bit 7 | COB-ID bit 7	
	Bit 8 | COB-ID bit 8	
	Bit 9 | COB-ID bit 9	
	Bit 10 | COB-ID bit 10	
	Bit 30 | RTR not allowed	
	Bit 31 | PDO invalid	
0x2304:092	CANopen settings: TPDO2 - Transmission type 0 ... [**255**] ... 255	Image of the CANopen object 0x1801:002
0x2304:093	CANopen settings: TPDO2 - Inhibit time 0.0 ... [**0.0**] ... 6553.5 ms	TPDO2: minimum time between the transmission of two identical PDOs in compliance with DS301 V4.02 Image of the CANopen object 0x1801:003 • The set time is rounded off internally to whole ms.
0x2304:095	CANopen settings: TPDO2 - Event timer 0 ... [**0**] ... 65535 ms	Image of the CANopen object 0x1801:005
0x2304:101	CANopen settings: TPDO3 - COB-ID 0x00000000 ... [**0xC0000381**] ... 0xFFFFFFFF	Image of the CANopen object 0x1802:001
	Bit 0 | COB-ID bit 0	
	Bit 1 | COB-ID bit 1	
	Bit 2 | COB-ID bit 2	
	Bit 3 | COB-ID bit 3	
	Bit 4 | COB-ID bit 4	
	Bit 5 | COB-ID bit 5	
	Bit 6 | COB-ID bit 6	
	Bit 7 | COB-ID bit 7	
	Bit 8 | COB-ID bit 8	
	Bit 9 | COB-ID bit 9	
	Bit 10 | COB-ID bit 10	
	Bit 30 | RTR not allowed	
	Bit 31 | PDO invalid	
0x2304:102	CANopen settings: TPDO3 - Transmission type 0 ... [**255**] ... 255	Image of the CANopen object 0x1802:002
0x2304:103	CANopen settings: TPDO3 - Inhibit time 0.0 ... [**0.0**] ... 6553.5 ms	TPDO3: minimum time between the transmission of two identical PDOs in compliance with DS301 V4.02 Image of the CANopen object 0x1802:003 • The set time is rounded off internally to whole ms.
0x2304:105	CANopen settings: TPDO3 - Event timer 0 ... [**0**] ... 65535 ms	Image of the CANopen object 0x1802:005

Address	Name / setting range / [default setting]		Information
0x2304:111	CANopen settings: TPDO4 - COB-ID 0x00000000 ... [**0xC0000481**] ... 0xFFFFFFFF		TPDO4: Identifier Image of the CANopen object 0x1803:001 How to change the identifier: 1. Set PDO to "invalid": Set bit 31 to "1". 2. Change identifier and reset PDO to "valid" (bit 31 = "0").
	Bit 0	COB-ID bit 0	
	Bit 1	COB-ID bit 1	
	Bit 2	COB-ID bit 2	
	Bit 3	COB-ID bit 3	
	Bit 4	COB-ID bit 4	
	Bit 5	COB-ID bit 5	
	Bit 6	COB-ID bit 6	
	Bit 7	COB-ID bit 7	
	Bit 8	COB-ID bit 8	
	Bit 9	COB-ID bit 9	
	Bit 10	COB-ID bit 10	
	Bit 30	RTR not allowed	
	Bit 31	PDO invalid	
0x2304:112	CANopen settings: TPDO4 - Transmission type 0 ... [**255**] ... 255		TPDO4: Transmission type in compliance with DS301 V4.02 Image of the CANopen object 0x1803:002
0x2304:113	CANopen settings: TPDO4 - Inhibit time 0.0 ... [**0.0**] ... 6553.5 ms		TPDO4: Minimum time between the transmission of two identical PDOs according to DS301 V4.02 Image of the CANopen object 0x1803:003 • The set time is rounded off internally to whole ms.
0x2304:115	CANopen settings: TPDO4 - Event timer 0 ... [**0**] ... 65535 ms		TPDO4: Cycle time for PDO transmission with transmission type "254" or "255". Image of the CANopen object 0x1803:005

15.2.4.1 Data mapping

Data mapping serves to define which process data are transmitted cyclically via the process data channels.

Details

Data mapping is preconfigured. It cannot be changed.

Pre-assignment:

- RPDOs: Process input image of the active technology application
- TPDOs: Process output image of the active technology application

The CANopen objects used can only be accessed via CANopen. They are not mapped as Lenze parameters.

RPDO-CANopen objects

Address	Name / setting range / [default setting]	Information
0x1600:000	RPDO1 mapping parameter: Number of mapped application objects in PDO 0 ... **[2]**	Number of objects mapped in RPDO1.
0x1600:001	RPDO1 mapping parameter: Application object 1 **[0x24E70120]**	Mapping entry 1 for RPDO1. Control word 00 of the technology application
0x1600:002	RPDO1 mapping parameter: Application object 2 **[0x24E70220]**	Mapping entry 2 for RPDO1. Control word 01 of the technology application
0x1601:000	RPDO2 mapping parameter: Number of mapped application objects in PDO 0 ... **[2]**	Number of objects mapped in RPDO2.
0x1601:001	RPDO2 mapping parameter: Application object 1 **[0x24E70320]**	Mapping entry 1 for RPDO2. Control word 02 of the technology application
0x1601:002	RPDO2 mapping parameter: Application object 2 **[0x24E70420]**	Mapping entry 2 for RPDO2. Control word 03 of the technology application
0x1602:000	RPDO3 mapping parameter: Number of mapped application objects in PDO 0 ... **[2]**	Number of objects mapped in RPDO3.
0x1602:001	RPDO3 mapping parameter: Application object 1 **[0x24E70520]**	Mapping entry 1 for RPDO3. Control word 04 of the technology application
0x1602:002	RPDO3 mapping parameter: Application object 2 **[0x24E70620]**	Mapping entry 2 for RPDO3. Control word 05 of the technology application
0x1603:000	RPDO4 mapping parameter: Number of mapped application objects in PDO 0 ... **[2]**	Number of objects mapped in RPDO4.
0x1603:001	RPDO4 mapping parameter: Application object 1 **[0x24E70720]**	Mapping entry 1 for RPDO4. Control word 06 of the technology application
0x1603:002	RPDO4 mapping parameter: Application object 2 **[0x24E70820]**	Mapping entry 2 for RPDO4. Control word 07 of the technology application

TPDO-CANopen objects

Address	Name / setting range / [default setting]	Information
0x1A00:000	TPDO1 mapping parameter: Number of mapped application objects in TPDO 0 ... **[2]**	Number of objects mapped in TPDO1.
0x1A00:001	TPDO1 mapping parameter: Application object 1 **[0x24E80120]**	Mapping entry 1 for TPDO1. Status word 00 of the technology application
0x1A00:002	TPDO1 mapping parameter: Application object 2 **[0x24E80220]**	Mapping entry 2 for TPDO1. Status word 01 of the technology application
0x1A01:000	TPDO2 mapping parameter: Number of mapped application objects in TPDO 0 ... **[2]**	Number of objects mapped in TPDO2.
0x1A01:001	TPDO2 mapping parameter: Application object 1 **[0x24E80320]**	Mapping entry 1 for TPDO2. Status word 02 of the technology application
0x1A01:002	TPDO2 mapping parameter: Application object 2 **[0x24E80420]**	Mapping entry 2 for TPDO2. Status word 03 of the technology application
0x1A02:000	TPDO3 mapping parameter: Number of mapped application objects in TPDO 0 ... **[2]**	Number of objects mapped in TPDO3.
0x1A02:001	TPDO3 mapping parameter: Application object 1 **[0x24E80520]**	Mapping entry 1 for TPDO3. Status word 04 of the technology application
0x1A02:002	TPDO3 mapping parameter: Application object 2 **[0x24E80620]**	Mapping entry 2 for TPDO3. Status word 05 of the technology application
0x1A03:000	TPDO4 mapping parameter: Number of mapped application objects in TPDO 0 ... **[2]**	Number of objects mapped in TPDO4.
0x1A03:001	TPDO4 mapping parameter: Application object 1 **[0x24E80720]**	Mapping entry 1 for TPDO4. Status word 06 of the technology application
0x1A03:002	TPDO4 mapping parameter: Application object 2 **[0x24E80820]**	Mapping entry 2 for TPDO4. Status word 07 of the technology application

15.2.5 Parameter data transfer

Service data objects (SDOs) make it possible to read and write all parameters of the inverter via CANopen.

Details

- Two independent SDO channels are provided at the same time. SDO channel 1 is always active. SDO channel 2 can be activated via 0x2301:005.
- An SDO is always transmitted with confirmation, i. e. the reception of an SDO frame is acknowledged by the receiver.
- The identifiers for SDO1 and SDO2 are generated from the basic identifier (in compliance with the "Predefined Connection Set") and the node address set:

Object	Direction		Identifier
	to the device	from the device	
SDO1	●		Basic identifier 0x600 + node address
		●	Basic identifier 0x580 + node address
SDO2	●		Basic identifier 0x640 + node address
		●	Basic identifier 0x5C0 + node address

Structure of the SDO frame user data

The user data are shown in Motorola format:

1st byte	2nd byte	3rd byte	4th byte	5th byte	6th byte	7th byte	8th byte
Command	**Index**		**Subindex**	**Data 1**	**Data 2**	**Data 3**	**Data 4**
See table below.	LOW byte	HIGH byte		LOW word		HIGH word	
	Address of the parameter to be read or written.			LOW byte	HIGH byte	LOW byte	HIGH byte

The following commands can be transmitted or received for writing and reading the parameters:

Command	1st byte		Data length	Info
	hex	dec		
Write request	0x23	35	4 bytes	Writing of a parameter to the inverter.
	0x2B	43	2 bytes	
	0x2F	47	1 byte	
	0x21	33	Block	
Write response	0x60	96	4 bytes	Inverter acknowledges a write request.
Read request	0x40	64	4 bytes	Reading of a parameter from the inverter.
Read response	0x43	67	4 bytes	Inverter response to a read request with the current parameter value.
	0x4B	75	2 bytes	
	0x4F	79	1 byte	
	0x41	65	Block	
Error response	0x80	128	4 bytes	Inverter response to the incorrect execution of the read/write request.

More precisely, the command byte comprises the following information:

Command	1st byte							
	Command specifier (cs)			Toggle (t)	Length*		e	s
	Bit 7	Bit 6	Bit 5	Bit 4	Bit 3	Bit 2	Bit 1	Bit 0
Write request	0	0	1	0	0/1	0/1	1	1
Write response	0	1	1	0	0	0	0	0
Read request	0	1	0	0	0	0	0	0
Read response	0	1	0	0	0/1	0/1	1	1
Error response	1	0	0	0	0	0	0	0

*Bit coding of the length: 00 = 4 bytes, 01 = 3 bytes, 10 = 2 bytes, 11 = 1 byte
e: expedited (shortened block service)
s: segmented (normal block service)

More commands are defined in the DS301 V4.02 CANopen specification (e. g. segmented transfer).

Up to 4 bytes are available for parameter value entries. Depending on the data format, they are assigned as follows:

5th byte	6th byte	7th byte	8th byte
Parameter value (1 byte)	0x00	0x00	0x00
Parameter value (2 bytes)		0x00	0x00
LOW byte	HIGH byte		
Parameter value (4 bytes)			
LOW word		HIGH word	
LOW byte	HIGH byte	LOW byte	HIGH byte

Parameter

Address	Name / setting range / [default setting]		Information
0x2301:005	CANopen settings: Activate SDO2 channel		1 = activate SDO server channel 2.
	0	**Not active**	
	1	Active	
0x2301:007	CANopen settings: COB-ID Configuration - SDO2		1 = COB-ID configuration -SDO 2 freely configurable.
	0	Base + node-ID	
	1	**Freely configurable**	
0x2304:031	CANopen settings: COB-ID client -> server (rx) 0x00000000 ... [**0x80000641**] ... 0xFFFFFFFF		Image of the CANopen object 0x1201:001 • If SDO server channel 2 is activated via 0x2301:005, this parameter is set to the value "node address + 0x640". This default setting can be changed. • The SDO server parameter is only valid if bit 31 is set to "0" for both transmission directions. How to change the identifier: 1. Set SDO to "invalid": Set bit 31 to "1". 2. Change identifier and reset SDO to "valid" (bit 31 = "0").
	Bit 0	COB-ID bit 0	
	Bit 1	COB-ID bit 1	
	Bit 2	COB-ID bit 2	
	Bit 3	COB-ID bit 3	
	Bit 4	COB-ID bit 4	
	Bit 5	COB-ID bit 5	
	Bit 6	COB-ID bit 6	
	Bit 7	COB-ID bit 7	
	Bit 8	COB-ID bit 8	
	Bit 9	COB-ID bit 9	
	Bit 10	COB-ID bit 10	
	Bit 31	PDO invalid	
0x2304:032	CANopen settings: COB-ID server -> client (tx) 0x00000000 ... [**0x800005C1**] ... 0xFFFFFFFF		Image of the CANopen object 0x1201:002 • If SDO server channel 2 is activated via 0x2301:005, this parameter is set to the value "node address + 0x640". This default setting can be changed. • The SDO server parameter is only valid if bit 31 is set to "0" for both transmission directions. How to change the identifier: 1. Set SDO to "invalid": Set bit 31 to "1". 2. Change identifier and reset SDO to "valid" (bit 31 = "0").
	Bit 0	COB-ID bit 0	
	Bit 1	COB-ID bit 1	
	Bit 2	COB-ID bit 2	
	Bit 3	COB-ID bit 3	
	Bit 4	COB-ID bit 4	
	Bit 5	COB-ID bit 5	
	Bit 6	COB-ID bit 6	
	Bit 7	COB-ID bit 7	
	Bit 8	COB-ID bit 8	
	Bit 9	COB-ID bit 9	
	Bit 10	COB-ID bit 10	
	Bit 31	PDO invalid	
0x2304:033	CANopen settings: SDO client - Node-ID 1 ... [**1**] ... 127		Image of the CANopen object 0x1201:003

15.2.6 Monitoring

15.2.6.1 Emergency telegram

If the error status changes when an internal device error occurs or is remedied, an emergency telegram is sent to the NMT master once.

Details

- The identifier for the emergency telegram is predefined. Display: ▸ 0x2302:003.
- A blocking time can be set to limit the bus load in the event of emergency telegrams following in quick succession. Setting: ▸ 0x2304:003

Parameter

Address	Name / setting range / [default setting]		Information
0x2302:003	Active CANopen settings: COB-ID Emergency telegram (EMCY) • Read only		Image of the CANopen object 0x1014
	Bit 0	Reserved	
	Bit 1	COB-ID bit 1	
	Bit 2	COB-ID bit 2	
	Bit 3	COB-ID bit 3	
	Bit 4	COB-ID bit 4	
	Bit 5	COB-ID bit 5	
	Bit 6	COB-ID bit 6	
	Bit 7	COB-ID bit 7	
	Bit 8	COB-ID bit 8	
	Bit 9	COB-ID bit 9	
	Bit 10	COB-ID bit 10	
	Bit 31	EMCY invalid	
0x2304:003	CANopen settings: EMCY - Inhibit time 0.0 ... [**0.0**] ... 6553.5 ms		Image of the CANopen object 0x1015

15.2.6.2 Heartbeat protocol

The heartbeat protocol can be used for node monitoring purposes within a CAN network.

Basic procedure

1. A heartbeat producer cyclically sends a heartbeat telegram to one or several receivers (consumers).
2. The consumer(s) monitor(s) the heartbeat telegram for arrival on a regular basis.

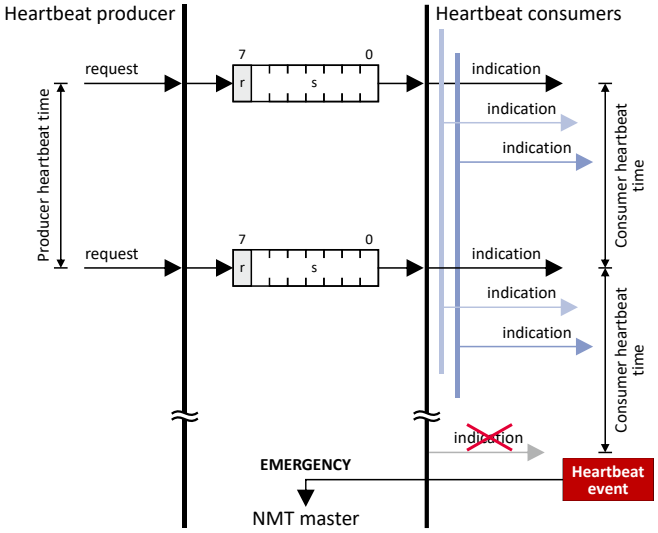

The inverter can be configured as producer or as consumer to monitor up to four other nodes.

Parameter

Address	Name / setting range / [default setting]	Information
0x2304:004	CANopen settings: Consumer heartbeat time 1 0x00000000 ... [**0x00000000**] ... 0xFFFFFFFF	Image of the CANopen object 0x1016:001 • Format: 0x00nnhhhh (nn = node ID, hhhh = Heartbeat Time in [ms]) • The parameterized time must be greater than the "Heartbeat Producer Time" of the node to be monitored.
	Bit 0	
	Bit 1	
	Bit 2	
	Bit 3	
	Bit 4	
	Bit 5	
	Bit 6	
	Bit 7	
	Bit 8	
	Bit 9	
	Bit 10	
	Bit 11	
	Bit 12	
	Bit 13	
	Bit 14	
	Bit 15	
	Bit 16	
	Bit 17	
	Bit 18	
	Bit 19	
	Bit 20	
	Bit 21	
	Bit 22	
	Bit 23	

Address	Name / setting range / [default setting]	Information
0x2304:005	CANopen settings: Consumer heartbeat time 2 0x00000000 ... [**0x00000000**] ... 0xFFFFFFFF	Image of the CANopen object 0x1016:002 • Format: 0x00nnhhhh (nn = node ID, hhhh = Heartbeat Time in [ms]) • The parameterized time must be greater than the "Heartbeat Producer Time" of the node to be monitored.
	Bit 0	
	Bit 1	
	Bit 2	
	Bit 3	
	Bit 4	
	Bit 5	
	Bit 6	
	Bit 7	
	Bit 8	
	Bit 9	
	Bit 10	
	Bit 11	
	Bit 12	
	Bit 13	
	Bit 14	
	Bit 15	
	Bit 16	
	Bit 17	
	Bit 18	
	Bit 19	
	Bit 20	
	Bit 21	
	Bit 22	
	Bit 23	
0x2304:006	CANopen settings: Consumer heartbeat time 3 0x00000000 ... [**0x00000000**] ... 0xFFFFFFFF	Image of the CANopen object 0x1016:003 • Format: 0x00nnhhhh (nn = node ID, hhhh = Heartbeat Time in [ms]) • The parameterized time must be greater than the "Heartbeat Producer Time" of the node to be monitored.
	Bit 0	
	Bit 1	
	Bit 2	
	Bit 3	
	Bit 4	
	Bit 5	
	Bit 6	
	Bit 7	
	Bit 8	
	Bit 9	
	Bit 10	
	Bit 11	
	Bit 12	
	Bit 13	
	Bit 14	
	Bit 15	
	Bit 16	
	Bit 17	
	Bit 18	
	Bit 19	
	Bit 20	
	Bit 21	
	Bit 22	
	Bit 23	

Address	Name / setting range / [default setting]		Information
0x2304:007	CANopen settings: Consumer heartbeat time 4 0x00000000 ... [**0x00000000**] ... 0xFFFFFFFF		Image of the CANopen object 0x1016:004 • Format: 0x00nnhhhh (nn = node ID, hhhh = Heartbeat Time in [ms]) • The parameterized time must be greater than the "Heartbeat Producer Time" of the node to be monitored.
	Bit 0		
	Bit 1		
	Bit 2		
	Bit 3		
	Bit 4		
	Bit 5		
	Bit 6		
	Bit 7		
	Bit 8		
	Bit 9		
	Bit 10		
	Bit 11		
	Bit 12		
	Bit 13		
	Bit 14		
	Bit 15		
	Bit 16		
	Bit 17		
	Bit 18		
	Bit 19		
	Bit 20		
	Bit 21		
	Bit 22		
	Bit 23		
0x2304:020	CANopen settings: Producer heartbeat time 0 ... [**0**] ... 65535 ms		Image of the CANopen object 0x1017 • The heartbeat telegram is sent automatically as soon as a time > 0 ms is set.

15.2.6.3 Error responses

The responses to CANopen errors such as missing PDOs or heartbeat frames can be configured via the following parameters.

Parameter

Address	Name / setting range / [default setting]		Information
0x2304:021	CANopen settings: Communication error		Image of the CANopen object 0x1029:001
	0	**Status -> Pre-operational**	
	1	No status change	
	2	Status -> Stopped	
0x2857:001	CANopen monitoring: RPDO1-Timeout		Selection of the response to triggering the RPDO1 time monitoring. Associated event ID: • 822313617 | 0x31038291 - CAN: RPDO1 time-out
	0	No response	▸ Severity 574
	1	Fault > CiA402	
	2	**Warning**	
0x2857:002	CANopen monitoring: RPDO2-Timeout		Selection of the response to triggering the RPDO2 time monitoring. Associated event ID: • 822313618 | 0x31038292 - CAN: RPDO2 time-out
	0	No response	▸ Severity 574
	1	Fault > CiA402	
	2	**Warning**	

Address	Name / setting range / [default setting]		Information
0x2857:003	CANopen monitoring: RPDO3-Timeout		Selection of the response to triggering the RPDO3 time monitoring. Associated event ID: • 33427 | 0x8293 - CAN: RPDO3 time-out
	0	No response	▸ Severity 574
	1	Fault > CiA402	
	2	**Warning**	
0x2857:004	CANopen monitoring: RPDO4-Timeout		Associated event ID: • 822313620 | 0x31038294 - CAN: RPDO4 time-out
	0	No response	▸ Severity 574
	1	Fault > CiA402	
	2	**Warning**	
0x2857:005	CANopen monitoring: Heartbeat-Timeout Consumer 1		Selection of the response with "Heartbeat Event" in consumer 1. Associated event ID: • 822313348 | 0x31038184 - CAN: heartbeat time-out consumer 1
	0	No response	▸ Severity 574
	1	Fault > CiA402	
	2	**Warning**	
0x2857:006	CANopen monitoring: Heartbeat-Timeout Consumer 2		Selection of the response with "Heartbeat Event" in consumer 2. Associated event ID: • 822313349 | 0x31038185 - CAN: heartbeat time-out consumer 2
	0	No response	▸ Severity 574
	1	Fault > CiA402	
	2	**Warning**	
0x2857:007	CANopen monitoring: Heartbeat-Timeout Consumer 3		Selection of the response with "Heartbeat Event" in consumer 3. Associated event ID: • 822313350 | 0x31038186 - CAN: heartbeat time-out consumer 3
	0	No response	▸ Severity 574
	1	Fault > CiA402	
	2	**Warning**	
0x2857:008	CANopen monitoring: Heartbeat-Timeout Consumer 4		Selection of the response with "Heartbeat Event" in consumer 4. Associated event ID: • 822313351 | 0x31038187 - CAN: heartbeat time-out consumer 4
	0	No response	▸ Severity 574
	1	Fault > CiA402	
	2	**Warning**	
0x2857:010	CANopen monitoring: "Bus-off" state change		Selection of the response to changing to the "Bus off" state. Associated event ID: • 822313346 | 0x31038182 - CAN: bus off
	0	No response	▸ Severity 574
	1	Fault > CiA402	
	2	**Warning**	
0x2857:011	CANopen monitoring: Warning		Selection of the response that is executed in the case of too many incorrectly sent or received CAN telegrams (> 96). Associated event ID: • 822313347 | 0x31038183 - CAN: warning
	0	No response	▸ Severity 574
	1	Fault > CiA402	
	2	**Warning**	

15.2.7 Diagnostics

15.2.7.1 LED status display

Information about the CAN bus status can be obtained quickly via the "CAN-RUN" and "CAN-ERR" LED displays on the front of the inverter.

The meaning can be seen from the tables below.

Inverter not active on the CAN bus (yet)

LED "CAN-RUN"	LED "CAN-ERR"	Meaning
off	off	Inverter is not active on the CAN bus.
	on	"Bus Off" state.
Both LEDs are flickering alternately		Automatic baud rate detection active.

Inverter active on the CAN bus

The green "CAN-RUN" LED indicates the CANopen state:

LED "CAN-RUN"	CANopen state
blinking fast (5 Hz)	Pre-Operational
on	Operational
blinking 1x, then goes off for 1 s	Stopped

The red "CAN-ERR" LED indicates a CANopen error:

LED "CAN-ERR"	CANopen error
blinking 1x, then goes off for 1 s	Warning Limit reached
blinking 2x, then goes off for 1 s	Heartbeat Event
blinking 3x, then goes off for 1 s	Sync message error (only possible in the "Operational" state)

15.2.7.2 Information on the network

Parameter

Address	Name / setting range / [default setting]		Information
0x2302:001	Active CANopen settings: Active node ID • Read only		Display of the active node address.
0x2302:002	Active CANopen settings: Active baud rate • Read only		Display of the active baud rate.
	0	Automatic	
	1	20 kbps	
	2	50 kbps	
	3	125 kbps	
	4	250 kbps	
	5	500 kbps	
	6	800 kbps	
	7	1 Mbps	

Address	Name / setting range / [default setting]		Information
0x2307	CANopen time-out status • Read only		Bit-coded status display of the CAN time monitoring functions.
	Bit 0	RPDO1-Timeout	1 = RPDO1 was not received within the monitoring time or not with the sync configured. • Status is reset automatically after the RPDO has been received again. • Setting of monitoring time for RPDO1 in 0x2304:045.
	Bit 1	RPDO2-Timeout	1 = RPDO2 was not received within the monitoring time or not with the sync configured. • Status is reset automatically after the RPDO has been received again. • Setting of monitoring time for RPDO2 in 0x2304:055.
	Bit 2	RPDO3-Timeout	1 = RPDO3 was not received within the monitoring time or not with the sync configured. • Status is reset automatically after the RPDO has been received again. • Setting of monitoring time for RPDO3 in 0x2304:065.
	Bit 3	RPDO4-Timeout	1 = RPDO4 was not received within the monitoring time or not with the sync configured. • Status is reset automatically after the RPDO has been received again. • Setting of monitoring time for RPDO4 in 0x2304:075.
	Bit 8	Heartbeat-Timeout Consumer 1	1 = within the "Heartbeat Consumer Time", no heartbeat telegram was received from node 1 to be monitored. • Status is automatically reset after the heartbeat telegram is received again. • "Heartbeat Consumer Time" setting in 0x2304:004.
	Bit 9	Heartbeat-Timeout Consumer 2	1 = within the "Heartbeat Consumer Time", no heartbeat telegram was received from node 2 to be monitored. • Status is automatically reset after the heartbeat telegram is received again. • "Heartbeat Consumer Time" setting in 0x2304:005.
	Bit 10	Heartbeat-Timeout Consumer 3	1 = within the "Heartbeat Consumer Time", no heartbeat telegram was received from node 3 to be monitored. • Status is automatically reset after the heartbeat telegram is received again. • "Heartbeat Consumer Time" setting in 0x2304:006.
	Bit 11	Heartbeat-Timeout Consumer 4	1 = within the "Heartbeat Consumer Time", no heartbeat telegram was received from node 4 to be monitored. • Status is automatically reset after the heartbeat telegram is received again. • "Heartbeat Consumer Time" setting in 0x2304:007.
0x2308	CANopen status • Read only		Display of the current state.
	0	Initialisation	Initialisation active. • The initialization is started automatically at mains connection. During this phase, the inverter us not involved in the data exchange process on the CAN bus. • When the initialization process has been completed, the inverter automatically adopts the "Pre-Operational" state.
	1	Reset node	"Reset Node" NMT command active. • Initialization of all CANopen-relevant parameters with the saved settings.
	2	Reset communication	"Reset Communication" NMT command active. • Initialization of all CANopen-relevant parameters with the saved settings.
	4	Stopped	"Stop remote node" NMT command active. • Only network management telegrams can be received.
	5	Operational	Parameter data and process data can be received. If defined, process data is sent as well.
	127	Pre-Operational	Parameter data can be received, process data are ignored.

Address	Name / setting range / [default setting]		Information
0x2309	CANopen controller status • Read only		Status display of the internal CANopen controller.
	1	Error active	The inverter is a fully-fledged communication node at the CANopen network. It is able to transmit and receive data and to report faults.
	2	Error passive	The inverter can only passively indicate faulty reception via the ACK field.
	3	Bus off	The inverter is electrically separated from the CANopen network. In order to exit this state, the CANopen interface must be reset. An automatic restart is implemented.
0x230A:001	CANopen statistics: PDO1 received • Read only		Display of the number of PDO1 telegrams received.
0x230A:002	CANopen statistics: PDO2 received • Read only		Display of the number of PDO2 telegrams received.
0x230A:003	CANopen statistics: PDO3 received • Read only		Display of the number of PDO3 telegrams received.
0x230A:004	CANopen statistics: POD3 recieved • Read only		Display of the number of received PDO4 telegrams.
0x230A:005	CANopen statistics: PDO1 transmitted • Read only		Display of the number of PDO1 telegrams sent.
0x230A:006	CANopen statistics: PDO2 transmitted • Read only		Display of the number of PDO2 telegrams sent.
0x230A:007	CANopen statistics: PDO3 transmitted • Read only		Display of the number of PDO3 telegrams sent.
0x230A:008	CANopen statistics: PDO4 transmitted • Read only		Display of the number of sent PDO4 telegrams.
0x230A:009	CANopen statistics: SDO1 telegrams • Read only		Display of the number of SDO1 telegrams.
0x230A:010	CANopen statistics: SDO2 telegrams • Read only		Display of the number of SDO2 telegrams.
0x230B	CANopen error counter • Read only		Display of the total number of CAN faults that have occurred.

15.3 onboard EtherCAT - Operation as standard EtherCAT slave

EtherCAT® (Ethernet for Controller and Automation Technology) is an Ethernet-based fieldbus system which fulfils the application profile for industrial realtime systems.

- EtherCAT® is a registered trademark and patented technology, licensed by Beckhoff Automation GmbH, Germany.
- Detailed information on EtherCAT can be found on the web page of EtherCAT Technology Group (ETG): http://www.ethercat.org
- Information about the sizing of an EtherCAT network can be found in the configuration document.

The inverter is equipped with an onboard EtherCAT connection that can be used in two variants:

- Connection of the inverter as Distributed Clocks (DC)-capable EtherCAT slave for process data and safety data under a standard EtherCAT motion control
- Connection of the inverter to the EtherCAT system bus.

▸ onboard EtherCAT - Operation as master or slave on the system bus 📖 365

15.3.1 Commissioning

During commissioning, the EtherCAT master operates as gateway to access from the Engineering PC to the slaves.

In the following, the required steps are described to control the device as EtherCAT slave.

Preconditions:

- The inverter is networked as an EtherCAT slave with an EtherCAT master and, if necessary, further EtherCAT devices.
- The entire wiring has already been checked for completeness, short circuit and earth fault.
- All EtherCAT devices are supplied with voltage and are switched on.
- The inverter is commissioned with the "EASY Starter" or the "PLC Designer".
  - Download »EASY Starter«
  - Download »PLC Designer«
- The EtherCAT master is commissioned with a manufacturer-specific engineering tool.
  Examples:
  - Lenze Controller with »PLC Designer«
  - Beckhoff PLC with TwinCAT
- The device description file required for project engineering of the inverter is installed.
  - The "PLC Designer" receives these files via the Lenze EASY Package Manager.
  - Third party engineering tools require an ESI device description file.

    Download XML/ESI files for Lenze devices
  - We always recommend the use of the current device description.

Parameterization required

The EtherCAT device must be configured as slave.

By default, the slave functionality is activated. 0x2371:009 = 0

How to activate the slave functionality:

1. Setting: 0x2371:009 = 0
2. Save parameter settings.

   ▸ Saving the parameter settings 📖 39
3. Restart inverter.

   Device command: 0x2022:035 = 1

The inverter is now configured as a slave.

Commissioning steps

How to configure the network:

1. **Configure gateway function of the master**
   1. Start »PLC Designer«.
   2. Open or recreate a »PLC Designer« project.
   3. Open the "Communication settings" tab of the master.
   4. Click "Add gateway".

      Do the following in the appearing dialog box:

      a) Enter the IP address of the master.
      b) Confirm the entry with "OK".
   5. Click "Search network".
   6. Select the corresponding master for the previously entered IP address.
   7. Click "Set active path".
   8. Log into the master using the "Online → Log in" menu command or with <Alt>+<F8>.

      Now you can access the slaves from the Engineering PC via the EtherCAT master as gateway.
2. **Carry out network scan.**
   1. Execute the "Start Search" command in the context menu of the master.

      The appearing dialog box lists all available EtherCAT devices according to the physical order in the network.
   2. Click "Copy all devices into the project".

      The physical network structure is reproduced in the »PLC Designer« project.

A proper operation requires that the network topology generated in the project corresponds to the physical order of the EtherCAT devices in the network. Otherwise, an error message displays which slave (product code) is to be expected at which position.

3. **Adapt EtherCAT device to the application**
   1. Adapt parameter values of the inverter.
   2. Set the PDO-Mapping.
   3. The selected parameters must be set as shown above.
4. **Load the network configuration into the master**
   1. Log off: Menu command "Online → Log off" or <Ctrl>+<F8>.
   2. Compiling: Menu command "Build → Build" or <F11>.
   3. Log in: Menu command "Online → Log in" or <Alt>+<F8>.

      The configuration, the parameter settings and the PLC program are loaded into the master. Afterwards, all EtherCAT slaves are initialized.

These steps must be carried out after every change within the »PLC Designer« project. An already existing configuration and an existing PLC program in the master are overwritten.

15.3.2 Basic setting and options

15.3.2.1 Synchronisation with "distributed clocks" (DC)

The **Distributed Clocks** (DC) functionality enables an exact time leveling for applications, in which several axes execute simultaneous, coordinated movements. The data is accepted synchronously with the PLC program. For DC synchronization, all slaves are synchronized with a reference clock, the so-called "DC master".

Parameter

Address	Name / setting range / [default setting]		Information
0x2580:001	Distributed Clocks: Real time status • Read only		Since its switch-on, the inverter has not yet received any real time information from outside. The inverter still works with a time based on the time of the last switch-off or the time stamp of the firmware.
	0	Not adjusted	Since its switch-on, the inverter has not yet received any real time information from outside.
	1	Adjusted once	
	2	Adjusted cyclically	
0x2580:002	Distributed Clocks: First setting time • Read only: x ns		Display of the time when the inverter has received a real time information from outside for the for first time after its switch-on. In the "No real time information received yet", the value "0" is displayed.
0x2580:003	Distributed Clocks: Newest setting time • Read only: x ns		Display of the time when the inverter has most recently received a real time information from outside.
0x2580:004	Distributed Clocks: Current time • Read only: x ns		Display of the time information currently used by the inverter (device time).

15.3.3 Process data transfer

- Process data is cyclically transferred between the EtherCAT master and the slaves (permanent exchange of current input and output data).
- The transfer of process data is time-critical.
- Supported cycle times:
  - 0.250 ms
  - 0.500 ms
  - 1,000 ms ... integer multiples of 1,000 ms ... max. 10,000 ms
- The process data serve to control the EtherCAT slaves.
- The process data can be directly accessed by the master. The data in the PLC, for instance, are directly stored in the I/O area.
- The contents of the process data are defined via I/O data mapping. This defines which EtherCAT objects are to be transmitted cyclically. The mapping of the process data depends on the technology application used.
- Process data is not saved in the device.
- Process data is, e.g. setpoints, actual values, control and status words.

15.3.4 Parameter data transfer

- For configuring and diagnosing the EtherCAT devices, the parameters are accessed by means of acyclic communication.
- Parameter data are transferred as SDOs (Service Data Objects).
- The SDO services enable the writing and reading access to parameters and EtherCAT objects.
- The transfer of parameter data is usually not time-critical.
- Parameter data is, for instance, operating parameters, motor data and diagnostic information.

SDO return values

If an SDO request is evaluated negatively, a corresponding error code is output:

Index	Description
0x00000000	No fault.
0x05030000	The state of the toggle bit has not changed.
0x05040000	SDO protocol time-out.
0x05040001	Invalid or unknown specification symbol for the client/server command.
0x05040005	The space in the main memory is not sufficient.
0x06010000	Unsupported access to an object.
0x06010001	Read access to a write-only object.
0x06010002	Write access to a read-only object.
0x06020000	An object is not available in the object directory.
0x06040041	An object cannot be mapped into the PDO.
0x06040042	The number and/or length of the mapped objects would exceed the PDO length.
0x06040043	General parameter incompatibility.
0x06040047	General internal incompatibility in the device.
0x06060000	The access has failed due to errors in the hardware.
0x06070010	The data type or the parameter length do not match.
0x06070012	Wrong data type: The parameter length is too big.
0x06070013	Wrong data type: The parameter length is too small.
0x06090011	A subindex is not available.
0x06090030	The value range for parameters is too big (only in case of write access).
0x06090031	The parameter value is too high.
0x06090032	The parameter value is too low.
0x06090036	The maximum value is smaller than the minimum value.
0x08000000	General fault.
0x08000020	Data cannot be transferred to the application or saved in the application.
0x08000021	Due to local control, the data cannot be transferred to the application or saved in the application.
0x08000022	Due to the current device state, the data cannot be transferred to the application or saved in the application.
0x08000023	The dynamic object directory generation has failed or no object directory is available.

15.3.5 Monitoring

Three different EtherCAT monitoring systems are available.

- Monitoring for cable interruption
- For distributed clocks (DC):
  - Sync0 monitoring
  - PDO telegram failure detection

Monitoring for cable interruption

This monitoring generally checks whether the EtherCAT cable is interrupted. Monitoring is not configurable and works with and without distributed clocks".

Behavior in the event of a cable interruption:

- The inverter changes to the "Safe-Operational" state.
- The inverter triggers a parameterizable error response.
  - Error response: ▸ 0x605E
  - Error code: ▸ 0x30018181

Sync0 monitoring for DC

This monitoring checks whether the Sync0 signals are generated correctly in time in the inverter when the inverter is in the "Operational" state.

The following is monitored:

- After "Pre-Operational" has changed to "Safe-Operational", the generation of Sync0 pulses has to be started within 5 seconds.
- The change from "Safe-Operational" to "Operational" without Sync0 signals being generated.
- No more Sync0 signals are detected for the duration of the double Sync0 cycle time.

Error behavior:

- The inverter changes to the "Safe-Operational" state.
- The inverter triggers a parameterizable error response.
  - Error response: ▸ 0x605E
  - Error code: ▸ 0x30018700
  - AL status code: 0x32

PDO telegram failure detection for DC

This monitoring checks whether an EtherCAT PDO telegram has arrived between two Sync0 signals (Sync Manager 2 Event).

For this purpose, the inverter has an internal error counter for PDO telegram failures:

- Each failed PDO telegram increases the counter by the value "3".
- Each correctly received PDO telegram decreases the counter by the value "1".
- Monitoring is configurable. ▸ 0x10F1:002

Error behavior:

- The inverter changes to the "Safe-Operational" state.
- The inverter triggers a parameterizable error response.
  - Error response: ▸ 0x605E
  - Error code: ▸ 0x30018701

Recommendation: Set 0x10F1:002 ≥ 4.

Thus one failed PDO telegram is tolerated, two PDO telegram failures in a row are forbidden.

Parameter

Address	Name / setting range / [default setting]	Information
0x10F1:001	Error settings: Local error reaction	An error response takes place exclusively via the inverter.
	2 **Device specific state**	
0x10F1:002	Error settings: Sync error counter limit 0 ... [**20**] ... 100	Setting for PDO frame failure detection. When the internal telegram failure error counter reaches the value set here, the inverter changes to the "Safe-Operational" state and causes an error (CiA402 error code 0x8700).

15.3.6 Diagnostics

15.3.6.1 LED status displays

The meaning of the "RUN" and "ERR" LEDs can be obtained from the following two tables.

LED "RUN" (green)

Blinking pattern	EtherCAT status	Status/meaning
off	off / Init	The network option is not active at the network or is in the "Init" status.
blinking	Pre-Operational	Access to parameters and objects is possible. No process data exchange.
	Safe-Operational	The data is not active yet in the standard device.
on	"Operational"	Valid process data is exchanged cyclically.

"ERR" LED (red)

Blinking pattern	Status/meaning
off	No fault
flickers	Local error. The network option changes automatically to the "Safe-Operational" status.
on (red)	A "Sync Manager Watchdog Timeout" has occurred.
blinking	The configuration is invalid/incorrect.

"L/A" LED (green)

Blinking pattern	State	Meaning
off	Not connected	Network not available
on	Connected	Network available No data transfer
blinking	Traffic	Data transfer

15.3.6.2 Information on the network

Parameter

Address	Name / setting range / [default setting]		Information
0x2378	onboard EtherCAT - status • Read only		Display of the active network status.
	1	Initialisation	
	2	Pre-Operational	
	3	Bootstrap	
	4	Safe-Operational	
	8	Operational	
0x2379	onboard EtherCAT - Error • Read only		Display of the active network error.
0x2372:009	onboard EtherCAT - Information: Active interface mode • Read only		Display of the active EtherCAT master/slave functionality for the system bus interface.
	0	Slave	Slave functionality is active.
	1	Master	Master functionality is active.

15.3.6.3 Device identification

The EtherCAT product code in 0x1018:002 consists of device-specific data and the currently activated technology application (0x4000). The last three positions in the product code refer to the activated technology application.

Parameter

Address	Name / setting range / [default setting]	Information
0x1000	Device type • Read only	CANopen device profile according CANopen specification CiA 301/ CiA 402.

Address	Name / setting range / [default setting]	Information
0x1008	Manufacturer device name • Read only	Display of the manufacturer device name.
0x1009	Manufacturer hardware version • Read only	Display of the manufacturer hardware version.
0x100A	Manufacturer software version • Read only	Display of the manufacturer software version.
0x1018:001	Identity object: Vendor ID • Read only	Display of the manufacturer's identification number.
0x1018:002	Identity object: Product Code • Read only	Display of the product code of the inverter.
	419446784 i950 (Basic Safety - STO)	
	419450880 i950 (BS-STO) 2	
	419479552 i950 (ES)	
	419479562 i950 (ES) - TA Speed Control	
	419483648 i950 (ES) 4	
	419483658 i950 (ES) - TA Speed Control	
0x1018:003	Identity object: Revision number • Read only	Display of the main and subversion of the firmware.
0x1018:004	Identity object: Serial number • Read only	Display of the serial number of the inverter.

15.3.7 EoE communication

With the protocol "Ethernet over EtherCAT (EoE)" normal standard Ethernet telegrams can be sent via the EtherCAT network without affecting the real-time communication of the EtherCAT process data.

The protocol enables the establishment of a parameter communication (SDO communication) to devices on the EtherCAT bus via a standard Ethernet connection.

Preconditions:

EoE communication

- A MAC address must be transmitted in the EoE initialization telegram.
- IP address assignment
  - With static IP address assignment, an IP different from 0.0.0.0, subnet mask and gateway IP must also be transmitted.
  - With dynamic IP address assignment, the transmission of the IP address, subnet mask and gateway IP can be omitted in the EoE initialization telegram.

System architecture

- The IP address assignment in the network can be done statically by the EtherCAT master via configuration or via a higher-level infrastructure that can be connected to the Ethernet switch port terminal.
- The PC used can obtain the IP address via the Ethernet switch port terminal if this supports a DHCP server or BOOTP mechanisms, or it must itself have a statically assigned IP in the same subnet.

Supported protocols and services

- ARP
- DHCP-Client
- ESDCP
- ICMP (ping)
- UDP/TCP
- GCI-SDO communication (TCP-Port 9410)

Parameter

Address	Name / setting range / [default setting]	Information
0x2020:001	EoE information: Virtual MAC address • Read only	Display of the virtual MAC address.

Address	Name / setting range / [default setting]	Information
0x2020:002	EoE information: IP address • Read only	Display of the IP address.
0x2020:003	EoE information: Subnet mask • Read only	Display of the subnet mask.
0x2020:004	EoE information: Standard gateway • Read only	Display of the standard gateway.
0x2020:005	EoE information: DNS server • Read only	Display of the DNS server.
0x2020:006	EoE information: DNS name • Read only	Display of the DNS name.
0x2020:007	EoE information: Received packages 0 ... [] ... 4294967295	Display of the packages received during the EoE transmission.
0x2020:008	EoE information: Transmitted packages 0 ... [] ... 4294967295	Display of the packages sent during the EoE transmission.

15.4 onboard EtherCAT - Operation as master or slave on the system bus

EtherCAT® (Ethernet for Controller and Automation Technology) is an Ethernet-based fieldbus system which fulfils the application profile for industrial realtime systems.

- EtherCAT® is a registered trademark and patented technology, licensed by Beckhoff Automation GmbH, Germany.
- Detailed information on EtherCAT can be found on the web page of EtherCAT Technology Group (ETG): http://www.ethercat.org
- Information about the sizing of an EtherCAT network can be found in the configuration document.

The inverter is equipped with an onboard EtherCAT connection that can be used in two variants:

- Connection of the inverter as Distributed Clocks (DC)-capable EtherCAT slave for process data and safety data under a standard EtherCAT motion control
- Connection of the inverter to the EtherCAT system bus.

▸ onboard EtherCAT - Operation as standard EtherCAT slave 🕮 356

The EtherCAT system bus offers the simple possibility of synchronizing up to 16 inverters without additional motion control via the onboard EtherCAT connection. The physically first inverter on the system bus is the EtherCAT master, the other system bus nodes are slaves. The system bus is configured automatically (plug & play).

Preconditions

- Only inverters of the i950 series are connected to the system bus.
- A maximum of 16 nodes including the master can be connected via the system bus.
- No further accessories are connected to the system bus.
- The inverters are not parameterised as CiA 402 motion drives, i.e. selection of a technology application: ▸ 0x4000 > 1

The technology application set is not checked.

Details

- The inverter can act as a system bus master or system bus slave.
- The system bus is prepared, i. e. a configuration is not required.
- The master assigns an identical master value to all system bus nodes (slaves).
- The »EASY Starter« is sufficient ...
  - to parameterise the devices in the network;
  - to configure the process data individually.
  - Download »EASY Starter«
- If further EtherCAT-compliant devices are to be used in addition to the inverters, the bus configuration must be adapted to the »PLC Designer«.
  - Download »PLC Designer«
  - Download XML/ESI files for Lenze devices
- Detailed information regarding the adaptation of the EtherCAT configuration with the »PLC Designer« can be found here:
  - Online help »EASY Starter«/»PLC Designer«, topic "Controller-based Automation EtherCAT"
  - Communication manual "Controller-based Automation EtherCAT" (PDF)

System bus topology

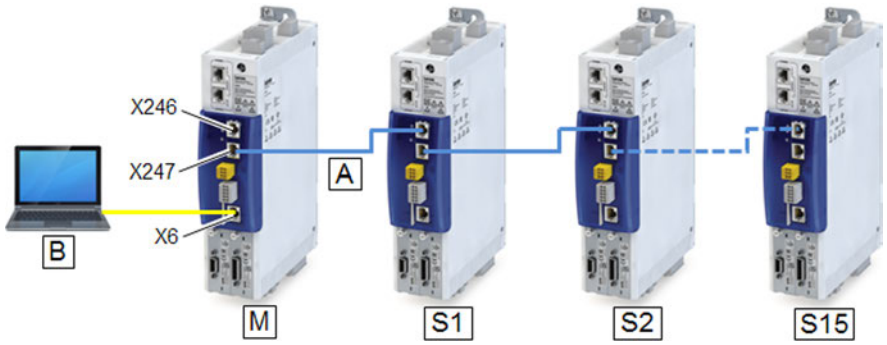

X246	System bus interface EtherCAT IN
x247	System bus interface EtherCAT OUT
X6	Ethernet NRT interface
A	EtherCAT system bus
B	Engineering PC
M	System bus master
S1 ... 15	System bus slaves 1 ... 15

15.4.1 Commissioning

Commissioning can be subdivided as follows:

- Initial commissioning in which at least the system bus master must be determined.
- System bus change, in which slave devices are added or removed subsequently.

Preconditions

- The inverter is linked in the system bus network (max. 16 devices) as EtherCAT master or EtherCAT slave.

  See "system bus topology" under: ▸ onboard EtherCAT - Operation as standard EtherCAT slave 📖 356
- The entire wiring has been checked for completeness, short circuit and earth fault.
- All system bus nodes are supplied with voltage and are switched on.
- An Engineering PC with installed »EASY Starter« is connected to the master.
  - Download »EASY Starter«

Parameterisation required

Set and activate master functionality at the 1st inverter in the system bus network:

1. Setting: 0x2371:009 = 1
2. Save parameter settings.

   ▸ Saving the parameter settings 📖 39
3. Restart inverter.

   Device command: 0x2022:035 = 1

The master function of the 1st inverter is now activated.

The cyclic master value and the individual process data are set via the technology application (0x4000) of the system bus master.

The 0x2371:009 parameter does not need to be set for the slave devices. The slave functionality is already preset with the value "0".

Select and configure technology applications:

1. Select a technology application (unequal to "CiA 402").

   Selection with: 0x4000
2. Optionally set the "IO configuration" with: 0x4001
3. Save parameter settings.

   ▸ Saving the parameter settings 📖 39

The technology applications of the inverter are now set.

The technology application in the system bus master provides the master value. The slave devices are FAST slaves (process slaves) as well and follow the master value of the process master.

Start system bus:

1. Restart system bus master (1st inverter).

   Device command: 0x2022:035 = 1

All devices currently found at the system are assigned and addressed to the corresponding devices in the device tree of the system bus master according to their physical order at the bus. See "Addressing of the system bus nodes under: ▸ Basic setting and options 📖 368

The number of devices at the system bus may be lower than the number of devices in the device tree of the system bus master.

All devices at the system bus are set to the "Operational" bus state when they have been identified as system bus nodes.

15.4.2 Basic setting and options

Addressing the system bus nodes

The first device in the system bus network is always active as EtherCAT master. In addition, this device is also an internal EtherCAT slave, which e. g. provides a DC master (Distributed Clocks).

The slave devices at the system bus are addressed via their active EtherCAT station address.

This address is assigned by the master while the system bus is initialised:

- The internal slave in the master device has the address "1001".
- The first slave in the network has the address "1002".
- The second slave in the network has the address "1003" etc.

Master/slave functionality

The 0x2371:009 parameter is used to set the functionality of the system bus interface of the inverter (EtherCAT master/slave).

Parameter

Address	Name / setting range / [default setting]		Information
0x2371:009	onboard EtherCAT: Interface mode • Setting can only be changed if the inverter is disabled.		Selection of the master/slave functionality for the EtherCAT interface. For activating this setting, save the parameter set and restart the device.
	0	**Slave**	Activation of the slave functionality.
	1	Master	Activation of the master functionality.

15.4.3 Process data transfer

In the system bus network …

- the setpoint process data (master to slave) are set via the system bus master inside the technology application;
- the actual process data (slave to master) is set via the slave device.

Data mapping

All inverter i950 slave devices have a fixed generic data mapping. This data mapping enables the use of the slave devices with an i950 inverter as system bus master and with other EtherCAT-based master control systems (PLC).

- The process data is set to 8 double words (32 bytes) for each direction.
- Output data direction: From Master to Slave.
  - Output data: 0xA200:001 ... 0xA200:008
- Input data direction: From Slave to Master.
  - Input data: 0xA680:001 ... 0xA680:008
- This fixed data mapping is automatically activated as master for an i950 inverter.
- The process data is transmitted cyclically in a 1 ms cycle between the master and the slaves.
- The process data transfer is synchronised by the "Distributed Clocks" EtherCAT mechanism.
  - A i950 master device provides the DC master via the internal slave.
  - The data in the slaves is accepted synchronously with the PLC program in the master.
  - All slaves are synchronised with a reference clock, the so-called "DC master".

Parameter

Address	Name / setting range / [default setting]	Information
0xA200:001	Systembus output data: Systembus data output 1 • Read only	Generic system bus output data from the PLC to the inverter.
0xA200:002	Systembus output data: Systembus data output 2 • Read only	
0xA200:003	Systembus output data: Systembus data output 3 • Read only	
0xA200:004	Systembus output data: Systembus data output 4 • Read only	
0xA200:005	Systembus output data: Systembus data output 5 • Read only	
0xA200:006	Systembus output data: Systembus data output 6 • Read only	
0xA200:007	Systembus output data: Systembus data output 7 • Read only	
0xA200:008	Systembus output data: Systembus data output 8 • Read only	
0xA680:001	Systembus input data: Systembus data input 1 0 ... [**0**] ... 4294967295	Generic system bus input data from the inverter to the PLC.
0xA680:002	Systembus input data: Systembus data input 2 0 ... [**0**] ... 4294967295	
0xA680:003	Systembus input data: Systembus data input 3 0 ... [**0**] ... 4294967295	
0xA680:004	Systembus input data: Systembus data input 4 0 ... [**0**] ... 4294967295	
0xA680:005	Systembus input data: Systembus data input 5 0 ... [**0**] ... 4294967295	
0xA680:006	Systembus input data: Systembus data input 6 0 ... [**0**] ... 4294967295	
0xA680:007	Systembus input data: Systembus data input 7 0 ... [**0**] ... 4294967295	
0xA680:008	Systembus input data: Systembus data input 8 0 ... [**0**] ... 4294967295	

15.4.3.1 Process output data

Parameter

Address	Name / setting range / [default setting]	Information
0xA200:001	Systembus output data: Systembus data output 1 • Read only	Generic system bus output data from the PLC to the inverter.
0xA200:002	Systembus output data: Systembus data output 2 • Read only	
0xA200:003	Systembus output data: Systembus data output 3 • Read only	
0xA200:004	Systembus output data: Systembus data output 4 • Read only	
0xA200:005	Systembus output data: Systembus data output 5 • Read only	
0xA200:006	Systembus output data: Systembus data output 6 • Read only	
0xA200:007	Systembus output data: Systembus data output 7 • Read only	
0xA200:008	Systembus output data: Systembus data output 8 • Read only	
0xA200:009	Systembus output data: Systembus data output 9 • Read only	
0xA200:010	Systembus output data: Systembus data output 10 • Read only	
0xA200:011	Systembus output data: Systembus data output 11 • Read only	
0xA200:012	Systembus output data: Systembus data output 12 • Read only	
0xA200:013	Systembus output data: Systembus data output 13 • Read only	
0xA200:014	Systembus output data: Systembus data output 14 • Read only	
0xA200:015	Systembus output data: Systembus data output 15 • Read only	
0xA200:016	Systembus output data: Systembus data output 16 • Read only	

15.4.3.2 Process input data

Parameter

Address	Name / setting range / [default setting]	Information
0xA680:001	Systembus input data: Systembus data input 1 0 ... [**0**] ... 4294967295	Generic system bus input data from the inverter to the PLC.
0xA680:002	Systembus input data: Systembus data input 2 0 ... [**0**] ... 4294967295	
0xA680:003	Systembus input data: Systembus data input 3 0 ... [**0**] ... 4294967295	
0xA680:004	Systembus input data: Systembus data input 4 0 ... [**0**] ... 4294967295	
0xA680:005	Systembus input data: Systembus data input 5 0 ... [**0**] ... 4294967295	
0xA680:006	Systembus input data: Systembus data input 6 0 ... [**0**] ... 4294967295	
0xA680:007	Systembus input data: Systembus data input 7 0 ... [**0**] ... 4294967295	
0xA680:008	Systembus input data: Systembus data input 8 0 ... [**0**] ... 4294967295	
0xA680:009	Systembus input data: Systembus data input 9 0 ... [**0**] ... 4294967295	
0xA680:010	Systembus input data: Systembus data input 10 0 ... [**0**] ... 4294967295	
0xA680:011	Systembus input data: Systembus data input 11 0 ... [**0**] ... 4294967295	
0xA680:012	Systembus input data: Systembus data input 12 0 ... [**0**] ... 4294967295	
0xA680:013	Systembus input data: Systembus data input 13 0 ... [**0**] ... 4294967295	
0xA680:014	Systembus input data: Systembus data input 14 0 ... [**0**] ... 4294967295	
0xA680:015	Systembus input data: Systembus data input 15 0 ... [**0**] ... 4294967295	
0xA680:016	Systembus input data: Systembus data input 16 0 ... [**0**] ... 4294967295	

15.4.4 Monitoring

Monitoring of the master/slave functionality

The following scenarios are monitored:

- The inverter at position 1 is not configured as system bus master.
- Several inverters have been configured as system bus master.

Depending on the assignment of the system bus interfaces X246 (EtherCAT IN) and X247 (EtherCAT OUT) and the set interface role in 0x2371:009 (master/slave), a warning is output:

Network cable plugged in X246/X247	0x2371:009 = **0** (Slave)	0x2371:009 = **1** (Master)
Only X246 (EtherCAT IN) is assigned.	OK	Warning
Only X247 (EtherCAT OUT) is assigned.	Warning	OK
X246 (EtherCAT IN) and X247 (EtherCAT OUT) are assigned.	OK	Warning

The parameters for setting network monitoring functions are described below.

Parameter

Address	Name / setting range / [default setting]		Information
0x285B:001	onboard EtherCAT monitoring: Watchdog elapsed		Associated event ID: • 805405057 | 0x30018181 - EtherCAT - Communication error
	0	No response	▸ Severity 574
	1	**Fault > CiA402**	
	2	Warning	

Address	Name / setting range / [default setting]		Information
0x285B:002	onboard EtherCAT monitoring: EtherCAT role check		Reaction if the setting in 0x2371:009 (Master/Slave) and the assignment of X246 (EtherCAT IN)/X247 (EtherCAT OUT) are not plausible.
	0	No response	▸ Severity 🕮 574
	1	Fault > CiA402	
	2	**Warning**	

15.4.5 Diagnostics

For diagnostic purposes, the system bus interfaces X246 and X247 provide LED status displays and diagnostic parameters for the EtherCAT system bus.

The diagnostic parameters are divided according to the interface role (master or slave) set in 0x2371:009.

In the »EASY Starter«, the diagnostic parameters can be accessed in the "Diagnostics" tab via the "Network diagnostics" button:

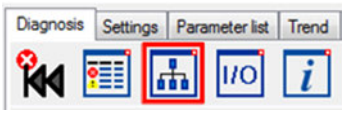

15.4.5.1 LED status displays

LED "RUN"

Blinking pattern	State	Meaning
off	OFF	No supply voltage.
	Initialisation (Init)	Network not active No data transfer
Blinking 1:1	Pre-Operational (Pre-Op)	Access possible No process data transfer
Blinking slowly 3:1	Safe-Operational (Safe-Op)	States of the safe inputs are readable.
on	Operational (Op)	Data transfer in action

LED "L/A"

Blinking pattern	State	Meaning
off	Not connected	Network not available
on	Connected	Network available No data transfer
blinking	Traffic	Data transfer

15.4.5.2 Information on the network

The following parameters show information on the network.

Parameter

Address	Name / setting range / [default setting]		Information
0x2378	onboard EtherCAT - status • Read only		Display of the active network status.
	1	Initialisation	
	2	Pre-Operational	
	3	Bootstrap	
	4	Safe-Operational	
	8	Operational	

Address	Name / setting range / [default setting]	Information
0x2379	onboard EtherCAT - Error • Read only	Display of the active network error.

15.4.5.3 EtherCAT master diagnostics

Parameter

Address	Name / setting range / [default setting]	Information
0x5851:001	EtherCAT master diagnosis: EtherCAT master state • Read only 0 Unknown 1 Init 2 Pre-Operational 3 Bootstrap 4 Safe-Operational 8 Operational	Display of the EtherCAT master state.
0x5851:002	EtherCAT master diagnosis: EtherCAT master state summary • Read only Bit 0 Master OK Bit 4 Init Bit 5 Pre-Operational Bit 6 Safe-Operational Bit 7 Operational Bit 8 Slaves in requested state Bit 9 Master in requested state Bit 10 Bus scan match Bit 12 DC enabled Bit 13 DC in sync Bit 14 DC busy Bit 16 Link up	Display of the EtherCAT master state overview.
0x5851:003	EtherCAT master diagnosis: EtherCAT error • Read only	Display whether an EtherCAT network error has occurred.
0x5851:004	EtherCAT master diagnosis: Bus scan match • Read only	Display whether a "Bus Scan Match" exists.
0x5851:005	EtherCAT master diagnosis: Configured cycle time • Read only: x µs	Display of the configured cycle time.
0x5851:006	EtherCAT master diagnosis: Connected slaves • Read only	Display of the number of slaves available in the network.
0x5851:007	EtherCAT master diagnosis: Configured slaves • Read only	Display of the number of configured slaves.
0x5860:001	EtherCAT slaves station addresses: Station address slave 1 • Read only	Display of the slave station address.

Address	Name / setting range / [default setting]	Information
0x5860:002	EtherCAT slaves station addresses: Station address slave 2 • Read only	
0x5860:003	EtherCAT slaves station addresses: Station address slave 3 • Read only	
0x5860:004	EtherCAT slaves station addresses: Station address slave 4 • Read only	
0x5860:005	EtherCAT slaves station addresses: Station address slave 5 • Read only	
0x5860:006	EtherCAT slaves station addresses: Station address slave 6 • Read only	
0x5860:007	EtherCAT slaves station addresses: Station address slave 7 • Read only	
0x5860:008	EtherCAT slaves station addresses: Station address slave 8 • Read only	
0x5860:009	EtherCAT slaves station addresses: Station address slave 9 • Read only	
0x5860:010	EtherCAT slaves station addresses: Station address slave 10 • Read only	
0x5860:011	EtherCAT slaves station addresses: Station address slave 11 • Read only	
0x5860:012	EtherCAT slaves station addresses: Station address slave 12 • Read only	
0x5860:013	EtherCAT slaves station addresses: Station address slave 13 • Read only	
0x5860:014	EtherCAT slaves station addresses: Station address slave 14 • Read only	
0x5860:015	EtherCAT slaves station addresses: Station address slave 15 • Read only	
0x5860:016	EtherCAT slaves station addresses: Station address slave 16 • Read only	
0x5861:001	EtherCAT slaves device names: Device name slave 1 • Read only	Display of the slave device name.

Address	Name / setting range / [default setting]	Information
0x5861:002	EtherCAT slaves device names: Device name slave 2 • Read only	
0x5861:003	EtherCAT slaves device names: Device name slave 3 • Read only	
0x5861:004	EtherCAT slaves device names: Device name slave 4 • Read only	
0x5861:005	EtherCAT slaves device names: Device name slave 5 • Read only	
0x5861:006	EtherCAT slaves device names: Device name slave 6 • Read only	
0x5861:007	EtherCAT slaves device names: Device name slave 7 • Read only	
0x5861:008	EtherCAT slaves device names: Device name slave 8 • Read only	
0x5861:009	EtherCAT slaves device names: Device name slave 9 • Read only	
0x5861:010	EtherCAT slaves device names: Device name slave 10 • Read only	
0x5861:011	EtherCAT slaves device names: Device name slave 11 • Read only	
0x5861:012	EtherCAT slaves device names: Device name slave 12 • Read only	
0x5861:013	EtherCAT slaves device names: Device name slave 13 • Read only	
0x5861:014	EtherCAT slaves device names: Device name slave 14 • Read only	
0x5861:015	EtherCAT slaves device names: Device name slave 15 • Read only	
0x5861:016	EtherCAT slaves device names: Device name slave 16 • Read only	
0x5862:001	EtherCAT slaves device types: Device type slave 1 • Read only	Display of the slave type designation.
0x5862:002	EtherCAT slaves device types: Device type slave 2 • Read only	
0x5862:003	EtherCAT slaves device types: Device type slave 3 • Read only	
0x5862:004	EtherCAT slaves device types: Device type slave 4 • Read only	
0x5862:005	EtherCAT slaves device types: Device type slave 5 • Read only	
0x5862:006	EtherCAT slaves device types: Device type slave 6 • Read only	
0x5862:007	EtherCAT slaves device types: Device type slave 7 • Read only	
0x5862:008	EtherCAT slaves device types: Device type slave 8 • Read only	
0x5862:009	EtherCAT slaves device types: Device type slave 9 • Read only	
0x5862:010	EtherCAT slaves device types: Device type slave 10 • Read only	
0x5862:011	EtherCAT slaves device types: Device type slave 11 • Read only	
0x5862:012	EtherCAT slaves device types: Device type slave 12 • Read only	
0x5862:013	EtherCAT slaves device types: Device type slave 13 • Read only	
0x5862:014	EtherCAT slaves device types: Device type slave 14 • Read only	
0x5862:015	EtherCAT slaves device types: Device type slave 15 • Read only	

Address	Name / setting range / [default setting]		Information
0x5862:016	EtherCAT slaves device types: Device type slave 16 • Read only		
0x5863:001	Mandatory EtherCAT slaves: Slave 1 is mandatory • Read only		
	0	FALSE	
	1	TRUE	
0x5863:002	Mandatory EtherCAT slaves: Slave 2 is mandatory • Read only		
	0	FALSE	
	1	TRUE	
0x5863:003	Mandatory EtherCAT slaves: Slave 3 is mandatory • Read only		
	0	FALSE	
	1	TRUE	
0x5863:004	Mandatory EtherCAT slaves: Slave 4 is mandatory • Read only		
	0	FALSE	
	1	TRUE	
0x5863:005	Mandatory EtherCAT slaves: Slave 5 is mandatory • Read only		
	0	FALSE	
	1	TRUE	
0x5863:006	Mandatory EtherCAT slaves: Slave 6 is mandatory • Read only		
	0	FALSE	
	1	TRUE	
0x5863:007	Mandatory EtherCAT slaves: Slave 7 is mandatory • Read only		
	0	FALSE	
	1	TRUE	
0x5863:008	Mandatory EtherCAT slaves: Slave 8 is mandatory • Read only		
	0	FALSE	
	1	TRUE	
0x5863:009	Mandatory EtherCAT slaves: Slave 9 is mandatory • Read only		
	0	FALSE	
	1	TRUE	
0x5863:010	Mandatory EtherCAT slaves: Slave 10 is mandatory • Read only		
	0	FALSE	
	1	TRUE	
0x5863:011	Mandatory EtherCAT slaves: Slave 11 is mandatory • Read only		
	0	FALSE	
	1	TRUE	
0x5863:012	Mandatory EtherCAT slaves: Slave 12 is mandatory • Read only		
	0	FALSE	
	1	TRUE	
0x5863:013	Mandatory EtherCAT slaves: Slave 13 is mandatory • Read only		
	0	FALSE	
	1	TRUE	

Address	Name / setting range / [default setting]		Information
0x5863:014	Mandatory EtherCAT slaves: Slave 14 is mandatory • Read only		
	0	FALSE	
	1	TRUE	
0x5863:015	Mandatory EtherCAT slaves: Slave 15 is mandatory • Read only		
	0	FALSE	
	1	TRUE	
0x5863:016	Mandatory EtherCAT slaves: Slave 16 is mandatory • Read only		
	0	FALSE	
	1	TRUE	
0x5864:001	EtherCAT slaves initialisation status: Initalisation status slave 1 • Read only		Display of the initialisation state of the EtherCAT slave.
	0	No Error	
	1	No access	
	2	Vendor ID check failed	
	3	Product code check failed	
	4	Revision check failed	
0x5864:002	EtherCAT slaves initialisation status: Initalisation status slave 2 • Read only		
	0	No Error	
	1	No access	
	2	Vendor ID check failed	
	3	Product code check failed	
	4	Revision check failed	
0x5864:003	EtherCAT slaves initialisation status: Initalisation status slave 3 • Read only		
	0	No Error	
	1	No access	
	2	Vendor ID check failed	
	3	Product code check failed	
	4	Revision check failed	
0x5864:004	EtherCAT slaves initialisation status: Initalisation status slave 4 • Read only		
	0	No Error	
	1	No access	
	2	Vendor ID check failed	
	3	Product code check failed	
	4	Revision check failed	
0x5864:005	EtherCAT slaves initialisation status: Initalisation status slave 5 • Read only		
	0	No Error	
	1	No access	
	2	Vendor ID check failed	
	3	Product code check failed	
	4	Revision check failed	

Address	Name / setting range / [default setting]		Information
0x5864:006	EtherCAT slaves initialisation status: Initalisation status slave 6 • Read only		
	0	No Error	
	1	No access	
	2	Vendor ID check failed	
	3	Product code check failed	
	4	Revision check failed	
0x5864:007	EtherCAT slaves initialisation status: Initalisation status slave 7 • Read only		
	0	No Error	
	1	No access	
	2	Vendor ID check failed	
	3	Product code check failed	
	4	Revision check failed	
0x5864:008	EtherCAT slaves initialisation status: Initalisation status slave 8 • Read only		
	0	No Error	
	1	No access	
	2	Vendor ID check failed	
	3	Product code check failed	
	4	Revision check failed	
0x5864:009	EtherCAT slaves initialisation status: Initalisation status slave 9 • Read only		
	0	No Error	
	1	No access	
	2	Vendor ID check failed	
	3	Product code check failed	
	4	Revision check failed	
0x5864:010	EtherCAT slaves initialisation status: Initalisation status slave 10 • Read only		
	0	No Error	
	1	No access	
	2	Vendor ID check failed	
	3	Product code check failed	
	4	Revision check failed	
0x5864:011	EtherCAT slaves initialisation status: Initalisation status slave 11 • Read only		
	0	No Error	
	1	No access	
	2	Vendor ID check failed	
	3	Product code check failed	
	4	Revision check failed	
0x5864:012	EtherCAT slaves initialisation status: Initalisation status slave 12 • Read only		
	0	No Error	
	1	No access	
	2	Vendor ID check failed	
	3	Product code check failed	
	4	Revision check failed	

Address	Name / setting range / [default setting]		Information
0x5864:013	EtherCAT slaves initialisation status: Initalisation status slave 13 • Read only		
	0	No Error	
	1	No access	
	2	Vendor ID check failed	
	3	Product code check failed	
	4	Revision check failed	
0x5864:014	EtherCAT slaves initialisation status: Initalisation status slave 14 • Read only		
	0	No Error	
	1	No access	
	2	Vendor ID check failed	
	3	Product code check failed	
	4	Revision check failed	
0x5864:015	EtherCAT slaves initialisation status: Initalisation status slave 15 • Read only		
	0	No Error	
	1	No access	
	2	Vendor ID check failed	
	3	Product code check failed	
	4	Revision check failed	
0x5864:016	EtherCAT slaves initialisation status: Initalisation status slave 16 • Read only		
	0	No Error	
	1	No access	
	2	Vendor ID check failed	
	3	Product code check failed	
	4	Revision check failed	
0x5865:001	EtherCAT slaves device status: Device status slave 1 • Read only		
	0	Unknown	
	1	Init	
	2	Pre-Operational	
	3	Bootstrap	
	4	Safe-Operational	
	8	Operational	
	65519	Not Present	
0x5865:002	EtherCAT slaves device status: Device status slave 2 • Read only		
	0	Unknown	
	1	Init	
	2	Pre-Operational	
	3	Bootstrap	
	4	Safe-Operational	
	8	Operational	
	65519	Not Present	

Address	Name / setting range / [default setting]		Information
0x5865:003	EtherCAT slaves device status: Device status slave 3 • Read only		
	0	Unknown	
	1	Init	
	2	Pre-Operational	
	3	Bootstrap	
	4	Safe-Operational	
	8	Operational	
	65519	Not Present	
0x5865:004	EtherCAT slaves device status: Device status slave 4 • Read only		
	0	Unknown	
	1	Init	
	2	Pre-Operational	
	3	Bootstrap	
	4	Safe-Operational	
	8	Operational	
	65519	Not Present	
0x5865:005	EtherCAT slaves device status: Device status slave 5 • Read only		
	0	Unknown	
	1	Init	
	2	Pre-Operational	
	3	Bootstrap	
	4	Safe-Operational	
	8	Operational	
	65519	Not Present	
0x5865:006	EtherCAT slaves device status: Device status slave 6 • Read only		
	0	Unknown	
	1	Init	
	2	Pre-Operational	
	3	Bootstrap	
	4	Safe-Operational	
	8	Operational	
	65519	Not Present	
0x5865:007	EtherCAT slaves device status: Device status slave 7 • Read only		
	0	Unknown	
	1	Init	
	2	Pre-Operational	
	3	Bootstrap	
	4	Safe-Operational	
	8	Operational	
	65519	Not Present	
0x5865:008	EtherCAT slaves device status: Device status slave 8 • Read only		
	0	Unknown	
	1	Init	
	2	Pre-Operational	
	3	Bootstrap	
	4	Safe-Operational	
	8	Operational	
	65519	Not Present	

Address	Name / setting range / [default setting]		Information
0x5865:009	EtherCAT slaves device status: Device status slave 9 • Read only		
	0	Unknown	
	1	Init	
	2	Pre-Operational	
	3	Bootstrap	
	4	Safe-Operational	
	8	Operational	
	65519	Not Present	
0x5865:010	EtherCAT slaves device status: Device status slave 10 • Read only		
	0	Unknown	
	1	Init	
	2	Pre-Operational	
	3	Bootstrap	
	4	Safe-Operational	
	8	Operational	
	65519	Not Present	
0x5865:011	EtherCAT slaves device status: Device status slave 11 • Read only		
	0	Unknown	
	1	Init	
	2	Pre-Operational	
	3	Bootstrap	
	4	Safe-Operational	
	8	Operational	
	65519	Not Present	
0x5865:012	EtherCAT slaves device status: Device status slave 12 • Read only		
	0	Unknown	
	1	Init	
	2	Pre-Operational	
	3	Bootstrap	
	4	Safe-Operational	
	8	Operational	
	65519	Not Present	
0x5865:013	EtherCAT slaves device status: Device status slave 13 • Read only		
	0	Unknown	
	1	Init	
	2	Pre-Operational	
	3	Bootstrap	
	4	Safe-Operational	
	8	Operational	
	65519	Not Present	
0x5865:014	EtherCAT slaves device status: Device status slave 14 • Read only		
	0	Unknown	
	1	Init	
	2	Pre-Operational	
	3	Bootstrap	
	4	Safe-Operational	
	8	Operational	
	65519	Not Present	

Address	Name / setting range / [default setting]		Information
0x5865:015	EtherCAT slaves device status: Device status slave 15 • Read only		
	0	Unknown	
	1	Init	
	2	Pre-Operational	
	3	Bootstrap	
	4	Safe-Operational	
	8	Operational	
	65519	Not Present	
0x5865:016	EtherCAT slaves device status: Device status slave 16 • Read only		
	0	Unknown	
	1	Init	
	2	Pre-Operational	
	3	Bootstrap	
	4	Safe-Operational	
	8	Operational	
	65519	Not Present	

15.4.5.4 Device identification

For device identification in the system bus network, the inverter provides the standard EtherCAT parameters 0x1018:001 ... 0x1018:004.

The EtherCAT product code in 0x1018:002 consists of device-specific data and the currently activated technology application (0x4000). The last three positions in the product code refer to the activated technology application.

The 0x2372:009 parameter indicates the functionality of the system bus interface of the inverter (EtherCAT master/slave).

Parameter

Address	Name / setting range / [default setting]		Information
0x1018:001	Identity object: Vendor ID • Read only		Display of the manufacturer's identification number.
0x1018:002	Identity object: Product Code • Read only		Display of the product code of the inverter.
	419446784	i950 (Basic Safety - STO)	
	419450880	i950 (BS-STO) 2	
	419479552	i950 (ES)	
	419479562	i950 (ES) - TA Speed Control	
	419483648	i950 (ES) 4	
	419483658	i950 (ES) - TA Speed Control	
0x1018:003	Identity object: Revision number • Read only		Display of the main and subversion of the firmware.
0x1018:004	Identity object: Serial number • Read only		Display of the serial number of the inverter.
0x2372:009	onboard EtherCAT - Information: Active interface mode • Read only		Display of the active EtherCAT master/slave functionality for the system bus interface.
	0	Slave	Slave functionality is active.
	1	Master	Master functionality is active.

15.5 EtherCAT

EtherCAT® (Ethernet for Controller and Automation Technology) is an Ethernet-based fieldbus system which fulfils the application profile for industrial realtime systems.

- EtherCAT® is a registered trademark and patented technology, licensed by Beckhoff Automation GmbH, Germany.
- Detailed information on EtherCAT can be found on the web page of EtherCAT Technology Group (ETG): http://www.ethercat.org
- Information about the dimensioning of an EtherCAT network can be found in the configuration document.

Preconditions

- The inverter is equipped with the "EtherCAT" network module.

  Connection via RJ45 sockets X246 (IN) and X247 (OUT) with commercially available standard Ethernet cable from CAT 5/5e.
- Selection of the technology application in the inverter with parameter ▸ 0x4000 > 1.

Typical topology

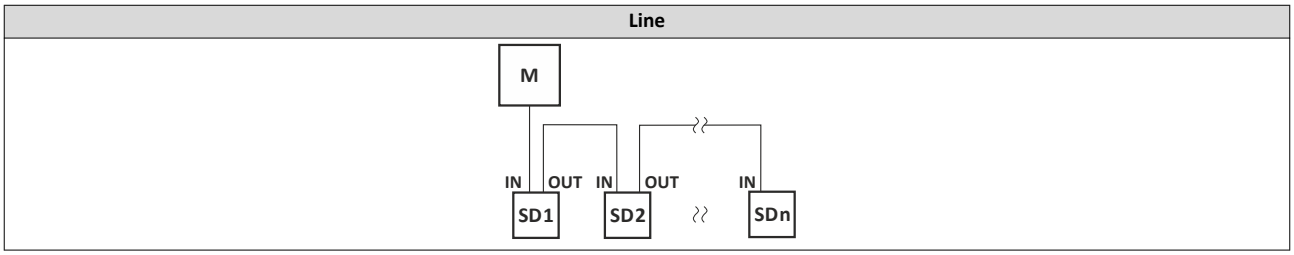

M	Master
SD	Slave Device

15.5.1 Commissioning

The steps required to control the inverter as an EtherCAT slave with an EtherCAT master are described below.

Preconditions:

- The inverter is networked as an EtherCAT slave with an EtherCAT master and, if necessary, further EtherCAT devices.
- The entire wiring has already been checked for completeness, short circuit and earth fault.
- All EtherCAT devices are supplied with voltage and are switched on.
- The inverter is commissioned with the "EASY Starter" or the "PLC Designer".
  - Download »EASY Starter«
  - Download »PLC Designer«
- The EtherCAT master is commissioned with a manufacturer-specific engineering tool. Examples:
  - Lenze Controller with »PLC Designer«
  - Beckhoff PLC with TwinCAT
- The device description file required for project engineering of the inverter is installed.
  - The "PLC Designer" receives these files via the Lenze EASY Package Manager.
  - Third party engineering tools require an ESI device description file.

    Download XML/ESI files for Lenze devices
  - We always recommend the use of the current device description.

Commissioning steps with the Lenze »PLC Designer«

How to configure the network:

1. **Configure gateway function of the master**
   1. »PLC Designer« Start.
   2. Open or recreate a »PLC Designer« project.
   3. Open the "Communication settings" tab of the master.
   4. Click "Add gateway".

      Do the following in the appearing dialog box:

      a) Enter the IP address of the master.
      b) Confirm the entry with "OK".
   5. Click "Search network".
   6. Select the corresponding master for the previously entered IP address.
   7. Click "Set active path".
   8. Log into the master using the "Online → Log in" menu command or with <Alt>+<F8>.

      Now you can access the slaves from the Engineering PC via the EtherCAT master as gateway.
2. **Carry out network scan.**
   1. Execute the "Start Search" command in the context menu of the EtherCAT master.

      The appearing dialog box lists all available EtherCAT devices according to the physical order in the network.
   2. Click "Copy all devices into the project".

      The physical network structure is reproduced in the »PLC Designer« project.

A proper operation requires that the network topology generated in the project corresponds to the physical order of the EtherCAT devices in the network. Otherwise, an error message displays which slave (product code) is to be expected at which position.

3. **Load the network configuration into the master**
   1. Log off: Menu command "Online → Log off" or <Ctrl>+<F8>.
   2. Define cycle time.
   3. Configure process data.
   4. Compiling: Menu command "Build → Build" or <F11>.
   5. Log in: Menu command "Online → Log in" or <Alt>+<F8>.

      The configuration, the parameter settings and the PLC program are loaded into the master. Afterwards, all EtherCAT slaves are initialized.

These steps must be executed after each change within the "PLC Designer" project.

An already existing configuration and an existing PLC program in the master are overwritten.

4. **Adapt EtherCAT device to the application**
   1. Adapt parameter values of the inverter.
5. **Restart of the communication**
   1. For restarting communication, there are two options:
      a) Switch inverter off and on again.
      b) 0x2360 = "Restart with current values [1]".

Commissioning is completed.

Parameter

Address	Name / setting range / [default setting]		Information
0x2360	EtherCAT communication		Restart communication. • When the device command has been executed successfully, the value 0 is shown.
	0	**No action/no error**	Only status feedback
	1	Restart with current values	Execute command
	10	In process	Only status feedback
	11	Action cancelled	
	12	Fault	
0x5850:001	EtherCAT master commands: Kommunikation neu starten		
	0	**No action/no error**	Only status feedback
	1	Neustart	Execute command
	10	Busy	Only status feedback
	11	Action cancelled	
	12	Faulted	

15.5.2 Process data transfer

- The process data serve to control the EtherCAT slaves.
- Process data are, e.g. setpoints, actual values, control words and status words.
- Process input data and process output data are cyclically exchanged between the EtherCAT master and the EtherCAT slaves.
- The transfer is time-critical.
- The process data can be accessed directly by the EtherCAT master. The data is located, for example, in the PLC directly in the I/O area.
- Process data is not saved in the inverter.
- The I/O data mapping defines the EtherCAT objects that are to be transferred cyclically.
- The length of the process data is 0, 4, 8, 12, 16, ... 64 bytes per direction.

Configuration

The fieldbus network must be selected as the interface for the technology application.

0x4001 = 0 (Fieldbus network)

- Mapping objects:
- Mapping of the available objects is possible in all operating modes as dynamic (free) configuration.

The used EtherCAT objects 0x1630 and 0x1A30 are only accessible via EtherCAT. They are not mapped as Lenze parameters.

- The contents can only be selected from the following objects:
  - RPDO mapping (0x1630:001 ... 0x1630:016): ▸ 0x24E7:001 ... ▸ 0x24E7:016
  - TPDO mapping (0x1A30:001 ... 0x1A30:016): ▸ 0x24E8:001 ... ▸ 0x24E8:016

Pre-assignment:

- RPDOs: Process input image of the active technology application
- TPDOs: Process output image of the active technology application

Number of mapping objects:

- Standard technology application (1 < 0x4000 < 100)
  - 8 mapping objects per direction
  - PDO length: 32 bytes
- User technology application (0x4000 ≥ 10000)
  - Max. 16 mapping objects per direction
  - PDO length: max. 64 bytes

15.5.2.1 Standard mapping

RPDO-EtherCAT objects

Address	Name / setting range / [default setting]	Information	
		Standard technology application (1 < 0x4000 < 100)	**User technology application (0x4000 ≥ 10000)**
0x1630:001	EtherCAT RPDO mapping: Application object 1 **[0x24E70120]**	Control word 00	Freely defined control word 00
0x1630:002	EtherCAT RPDO mapping: Application object 2 **[0x24E70220]**	Control word 01	Freely defined control word 01
0x1630:003	EtherCAT RPDO mapping: Application object 3 **[0x24E70320]**	Control word 02	Freely defined control word 02
0x1630:004	EtherCAT RPDO mapping: Application object 4 **[0x24E70420]**	Control word 03	Freely defined control word 03
0x1630:005	EtherCAT RPDO mapping: Application object 5 **[0x24E70520]**	Control word 04	Freely defined control word 04
0x1630:006	EtherCAT RPDO mapping: Application object 6 **[0x24E70620]**	Control word 05	Freely defined control word 05
0x1630:007	EtherCAT RPDO mapping: Application object 7 **[0x24E70720]**	Control word 06	Freely defined control word 06
0x1630:008	EtherCAT RPDO mapping: Application object 8 **[0x24E70820]**	Control word 07	Freely defined control word 07
0x1630:009	EtherCAT RPDO mapping: Application object 9 **[0x24E70920]**		Freely defined control word 08
0x1630:010	EtherCAT RPDO mapping: Application object 10 **[0x24E70A20]**		Freely defined control word 09
0x1630:011	EtherCAT RPDO mapping: Application object 11 **[0x24E70B20]**		Freely defined control word 10
0x1630:012	EtherCAT RPDO mapping: Application object 12 **[0x24E70C20]**		Freely defined control word 11
0x1630:013	EtherCAT RPDO mapping: Application object 13 **[0x24E70D20]**		Freely defined control word 12
0x1630:014	EtherCAT RPDO mapping: Application object 14 **[0x24E70E20]**		Freely defined control word 13
0x1630:015	EtherCAT RPDO mapping: Application object 15 **[0x24E70F20]**		Freely defined control word 14
0x1630:016	EtherCAT RPDO mapping: Application object 16 **[0x24E71020]**		Freely defined control word 15

TPDO-EtherCAT objects

Address	Name / setting range / [default setting]	Information	
		Standard technology application (1 < 0x4000 < 100)	**User technology application (0x4000 ≥ 10000)**
0x1A30:001	EtherCAT TPDO mapping: Application object 1 **[0x24E80120]**	Status word 00	Freely defined status word 00
0x1A30:002	EtherCAT TPDO mapping: Application object 2 **[0x24E80220]**	Status word 01	Freely defined status word 01
0x1A30:003	EtherCAT TPDO mapping: Application object 3 **[0x24E80320]**	Status word 02	Freely defined status word 02
0x1A30:004	EtherCAT TPDO mapping: Application object 4 **[0x24E80420]**	Status word 03	Freely defined status word 03
0x1A30:005	EtherCAT TPDO mapping: Application object 5 **[0x24E80520]**	Status word 04	Freely defined status word 04
0x1A30:006	EtherCAT TPDO mapping: Application object 6 **[0x24E80620]**	Status word 05	Freely defined status word 05
0x1A30:007	EtherCAT TPDO mapping: Application object 7 **[0x24E80720]**	Status word 06	Freely defined status word 06
0x1A30:008	EtherCAT TPDO mapping: Application object 8 **[0x24E80820]**	Status word 07	Freely defined status word 07
0x1A30:009	EtherCAT TPDO mapping: Application object 9 **[0x24E80920]**		Freely defined status word 08
0x1A30:010	EtherCAT TPDO mapping: Application object 10 **[0x24E80A20]**		Freely defined status word 09
0x1A30:011	EtherCAT TPDO mapping: Application object 11 **[0x24E80B20]**		Freely defined status word 10
0x1A30:012	EtherCAT TPDO mapping: Application object 12 **[0x24E80C20]**		Freely defined status word 11
0x1A30:013	EtherCAT TPDO mapping: Application object 13 **[0x24E80D20]**		Freely defined status word 12
0x1A30:014	EtherCAT TPDO mapping: Application object 14 **[0x24E80E20]**		Freely defined status word 13
0x1A30:015	EtherCAT TPDO mapping: Application object 15 **[0x24E80F20]**		Freely defined status word 14
0x1A30:016	EtherCAT TPDO mapping: Application object 16 **[0x24E81020]**		Freely defined status word 15

Parameter

Address	Name / setting range / [default setting]	Information
0x24E7:001	Network input data: Input data 1 0 ... [] ... 4294967295	
0x24E7:002	Network input data: Input data 2 0 ... [] ... 4294967295	
0x24E7:003	Network input data: Input data 3 0 ... [] ... 4294967295	
0x24E7:004	Network input data: Input data 4 0 ... [] ... 4294967295	
0x24E7:005	Network input data: Input data 5 0 ... [] ... 4294967295	
0x24E7:006	Network input data: Input data 6 0 ... [] ... 4294967295	
0x24E7:007	Network input data: Input data 7 0 ... [] ... 4294967295	
0x24E7:008	Network input data: Input data 8 0 ... [] ... 4294967295	
0x24E7:009	Network input data: Input data 9 0 ... [] ... 4294967295	
0x24E7:010	Network input data: Input data 10 0 ... [] ... 4294967295	

Address	Name / setting range / [default setting]	Information
0x24E7:011	Network input data: Input data 11 0 ... [] ... 4294967295	
0x24E7:012	Network input data: Input data 12 0 ... [] ... 4294967295	
0x24E7:013	Network input data: Input data 13 0 ... [] ... 4294967295	
0x24E7:014	Network input data: Input data 14 0 ... [] ... 4294967295	
0x24E7:015	Network input data: Input data 15 0 ... [] ... 4294967295	
0x24E7:016	Network input data: Input data 16 0 ... [] ... 4294967295	
0x24E8:001	Network output data: Output data 1 • Read only	
0x24E8:002	Network output data: Output data 2 • Read only	
0x24E8:003	Network output data: Output data 3 • Read only	
0x24E8:004	Network output data: Output data 4 • Read only	
0x24E8:005	Network output data: Output data 5 • Read only	
0x24E8:006	Network output data: Output data 6 • Read only	
0x24E8:007	Network output data: Output data 7 • Read only	
0x24E8:008	Network output data: Output data 8 • Read only	
0x24E8:009	Network output data: Output data 9 • Read only	
0x24E8:010	Network output data: Output data 10 • Read only	
0x24E8:011	Network output data: Output data 11 • Read only	
0x24E8:012	Network output data: Output data 12 • Read only	
0x24E8:013	Network output data: Output data 13 • Read only	
0x24E8:014	Network output data: Output data 14 • Read only	
0x24E8:015	Network output data: Output data 15 • Read only	
0x24E8:016	Network output data: Output data 16 • Read only	

15.5.3 Parameter data transfer

- For configuring and diagnosing the EtherCAT devices, the parameters are accessed by means of acyclic communication.
- Parameter data are transferred as SDOs (Service Data Objects).
- The SDO services enable the writing and reading access to parameters and EtherCAT objects.
- The transfer of parameter data is usually not time-critical.
- Parameter data is, for instance, operating parameters, motor data and diagnostic information.

SDO return values

If an SDO request is evaluated negatively, a corresponding error code is output:

Index	Description
0x00000000	No fault.
0x05030000	The state of the toggle bit has not changed.
0x05040000	SDO protocol time-out.
0x05040001	Invalid or unknown specification symbol for the client/server command.
0x05040005	The space in the main memory is not sufficient.
0x06010000	Unsupported access to an object.
0x06010001	Read access to a write-only object.
0x06010002	Write access to a read-only object.
0x06020000	An object is not available in the object directory.
0x06040041	An object cannot be mapped into the PDO.
0x06040042	The number and/or length of the mapped objects would exceed the PDO length.
0x06040043	General parameter incompatibility.
0x06040047	General internal incompatibility in the device.
0x06060000	The access has failed due to errors in the hardware.
0x06070010	The data type or the parameter length do not match.
0x06070012	Wrong data type: The parameter length is too big.
0x06070013	Wrong data type: The parameter length is too small.
0x06090011	A subindex is not available.
0x06090030	The value range for parameters is too big (only in case of write access).
0x06090031	The parameter value is too high.
0x06090032	The parameter value is too low.
0x06090036	The maximum value is smaller than the minimum value.
0x08000000	General fault.
0x08000020	Data cannot be transferred to the application or saved in the application.
0x08000021	Due to local control, the data cannot be transferred to the application or saved in the application.
0x08000022	Due to the current device state, the data cannot be transferred to the application or saved in the application.
0x08000023	The dynamic object directory generation has failed or no object directory is available.

15.5.4 Monitoring

The parameters for setting network monitoring functions are described below.

Parameter

Address	Name / setting range / [default setting]	Information
0x10F1:001	Error settings: Local error reaction	An error response takes place exclusively via the inverter.
	2 **Device specific state**	
0x10F1:002	Error settings: Sync error counter limit 0 ... [**20**] ... 100	Setting for PDO frame failure detection. When the internal telegram failure error counter reaches the value set here, the inverter changes to the "Safe-Operational" state and causes an error (CiA402 error code 0x8700).

Address	Name / setting range / [default setting]		Information
0x2859:001	Network monitoring: Watchdog elapsed		Selection of the response to a permanent interruption of the communication to the IO controller. Associated event ID: • 822313360 | 0x31038190 - Network - Watchdog time-out
	0	No response	▸ Severity 574
	1	Fault > CiA402	
	2	**Warning**	
0x2859:003	Network monitoring: Invalid configuration		Selection of the response triggered by the reception of invalid configuration data. Associated event ID: • 822313607 | 0x31038287 - Network - Invalid configuration
	0	No response	▸ Severity 574
	1	Fault > CiA402	
	2	**Warning**	
0x2859:004	Network monitoring: Initialisation error		Selection of the response triggered by the occurrence of an error during the initialization of the network component. Associated event ID: • 822313362 | 0x31038192 - Network - Initialization error
	0	No response	▸ Severity 574
	1	Fault > CiA402	
	2	**Warning**	
0x2859:005	Network monitoring: Invalid process data		Selection of the response triggered by the reception of invalid process data. Process data marked as invalid (IOPS is "BAD") are received by the IO Controller. Typically in case of • a PLC in STOP state, • alarms, • acyclic demand data. Associated event ID: • 822313363 | 0x31038193 - Network - Invalid cyclic process data
	0	No response	▸ Severity 574
	1	Fault > CiA402	
	2	**Warning**	

15.5.5 Diagnostics

15.5.5.1 LED status display

The meaning of the "RUN" and "ERR" LEDs can be obtained from the following two tables.

LED "RUN" (green)

Blinking pattern	EtherCAT status	Status/meaning
off	off / Init	The network option is not active at the network or is in the "Init" status.
blinking	Pre-Operational	Access to parameters and objects is possible. No process data exchange.
	Safe-Operational	The data is not active yet in the standard device.
on	"Operational"	Valid process data is exchanged cyclically.

"ERR" LED (red)

Blinking pattern	Status/meaning
off	No fault
flickers	Local error. The network option changes automatically to the "Safe-Operational" status.
on (red)	A "Sync Manager Watchdog Timeout" has occurred.
blinking	The configuration is invalid/incorrect.

"L/A" LED (green)

Blinking pattern	State	Meaning
off	Not connected	Network not available
on	Connected	Network available No data transfer
blinking	Traffic	Data transfer

15.5.5.2 Information on the network

The following parameters show information on the network.

Parameter

Address	Name / setting range / [default setting]		Information
0x2362:007	Active EtherCAT settings: Tx length • Read only		Display of the length of the transmitted cyclic data in bytes.
0x2362:008	Active EtherCAT settings: Rx length • Read only		Display of the length of the received cyclic data in bytes.
0x2368	EtherCAT status • Read only		Display of the current network status.
	0		
	1	Initialization	Network initialization is active. • No PDO/SDO transmission. • Device identification is possible by network scan.
	2	Pre-Operational	The network is active. • SDO transmission (CoE communication via mailbox) is possible. • No PDO transmission.
	3	Bootstrap	Is not supported.

	4	Safe-Operational	• SDO transmission (CoE communication via mailbox) is possible.
			• PDO transmission:
			  • The input data in the process image are updated.
			  • The output data from the process image is invalid and is not transferred to the application.

	8	Operational	Normal operation • PDO/SDO transmission is possible. • • The output data from the process image is valid and is transferred to the application.

Address	Name / setting range / [default setting]	Information
0x2369	EtherCAT error • Read only	Bit coded display of EtherCAT errors.
	Bit 0 Watchdog elapsed	
	Bit 2 Invalid configuration	
	Bit 3 Stack init error	
	Bit 4 Invalid process data	

15.5.5.3 Error history buffer

Parameter

Address	Name / setting range / [default setting]	Information
0x1001	Error register • Read only	

15.5.5.4 Device identification

The EtherCAT product code in 0x1018:002 consists of device-specific data and the currently activated technology application (0x4000). The last three positions in the product code refer to the activated technology application.

For device identification in the network, the inverter provides the EtherCAT objects listed in the following.

The objects can only be accessed via the EtherCAT network.

Parameter

Address	Name / setting range / [default setting]	Information
0x1000	Device type • Read only	CANopen device profile according CANopen specification CiA 301/ CiA 402.
0x1008	Manufacturer device name • Read only	Display of the manufacturer device name.
0x1009	Manufacturer hardware version • Read only	Display of the manufacturer hardware version.
0x100A	Manufacturer software version • Read only	Display of the manufacturer software version.
0x1018:001	Identity object: Vendor ID • Read only	Display of the manufacturer's identification number.
0x1018:002	Identity object: Product Code • Read only	Display of the product code of the inverter.
	419446784 i950 (Basic Safety - STO)	
	419450880 i950 (BS-STO) 2	
	419479552 i950 (ES)	
	419479562 i950 (ES) - TA Speed Control	
	419483648 i950 (ES) 4	
	419483658 i950 (ES) - TA Speed Control	
0x1018:003	Identity object: Revision number • Read only	Display of the main and subversion of the firmware.
0x1018:004	Identity object: Serial number • Read only	Display of the serial number of the inverter.

15.6 EtherNet/IP

EtherNet/IP is available from inverter firmware 01.04.02.

As of inverter firmware 01.06, the EtherNet/IP functionality has been incompatibly extended.

EtherNet/IP™ (EtherNet Industrial Protocol) is a fieldbus system based on Ethernet which uses the Common Industrial Protocol™ (CIP™) for data exchange.

- EtherNet/IP™ and Common Industrial Protocol™ (CIP™) are trademarks and patented technologies, licensed by the user organisation ODVA (Open DeviceNet Vendor Assoziation).
- Detailed information on EtherNet/IP can be found on the web page of the user organisation: http://www.odva.org
- Information about the dimensioning of a EtherNet/IP network can be found in the planning manual for the inverter.

The inverter can be controlled by any EtherNet/IP client or client tool. EtherNet/IP client or client tool must either support Class 1 Messaging or Class 3 Messaging. For this purpose, the inverter must be configured as Generic Device Adapter or as AC Drive Device with the »RSLogix™ 5000« programming software of Rockwell Automation® Corporation.

▸ Commissioning 📖 407

Registered trademarks used or trademarks of the Rockwell Automation® Corporation, USA:

- »RSLogix™«, »RSLogix™ 5000«
- »Allen-Bradley®«
- »CompactLogix™«, »ControlLogix®«, »SoftLogix™«

Preconditions

- The inverter is equipped with the EtherNet/IP network module.
  - Connection via RJ45 sockets X266 and X267.
  - Use commercially available standard Ethernet cable from CAT 5/5e.
- Selection of the technology application in the inverter with parameter ▸ 0x4000 > 1.

Typical topologies

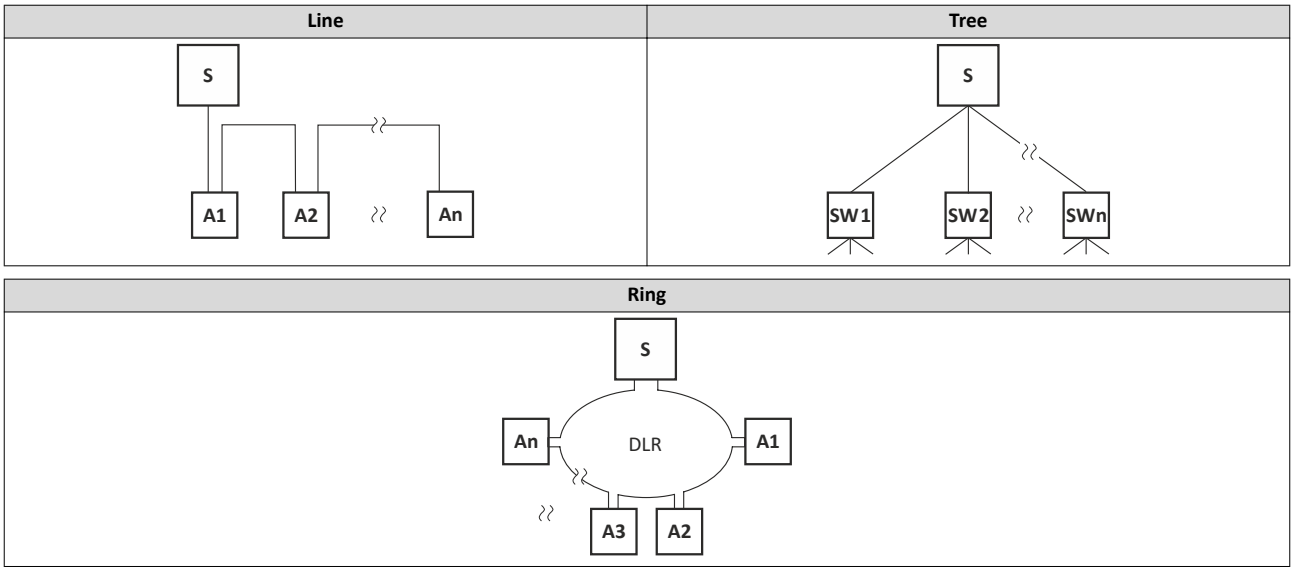

S	Scanner	SW	Switch
A	Adapter		

15.6.1 Supported CIP objects

An object is described by its class, instances and attributes. Various services, such as reading or writing services, can be applied to the objects.

This chapter only describes the CIP objects implemented by Lenze and their supported features (attributes).

Not all object features as described in the "Common Industrial Protocol Specification" of the ODVA are supported.

15.6.1.1 0x01-Identity Object

The "Identity Object" provides the identification and the general information on the device.

Device Type and Product Code are incompatibly changed as of FW 01.06.

0x01: Identity Object

Attribute (Instance ID)	Name	Information	
		As of FW 01.06	FW 01.04/FW 01.05
1	Vendor ID	587 (Lenze)	
2	Device Type	2 (AC Drive)	43 (Generic Device)
3	Product Code	951	950
4	Revision	e.g.: "2.1"	e.g.: "1.1"
5	Status	Current device status (status bits)	
6	Serial Number	Serial number of the inverter	
7	Product Name	i950 Servo Drive	
8	State	Current device state ▸ 0x23A8	

15.6.1.2 0x04-Assembly Object

The inverter contains EtherNet/IP assembly object instances which refer to the following »RSLogix™ 5000«connection parameters:

- Inputs (actual value such as actual speed, actual position, etc.)
- Outputs (enable and reference value for the drive)
- Configuration

The inputs and outputs refer to the view of the Scanner (PLC).

Output data/assemblies are created by the Scanner (PLC) and transmitted to the Adapter (inverter).

Input data/assemblies are created by the Adapter (inverter) and transmitted to the Scanner (PLC).

The assembly object instances can be accessed via "Class 1 Messaging" (Implicit Messaging) and "Class 3 Messaging" (Explicit Messaging).

See also:

▸ Process data transfer 📖 411 (Implicit Messaging)

▸ Parameter data transfer 📖 424 (Explicit Messaging)

The assembly object provides the following common services for accessing Assembly Object instances:

- 0x0E: Get_Attribute_Single (read parameter/assembly data)
- 0x10: Set_Attribute_Single (write parameter/assembly data)

Predefined assembly object instances can be used according to the "CIP™ Network Library":

Assembly output objects (outputs)

Assembly output objects are used to enable the inverter (Adapter) and to specify a speed setpoint or torque setpoint.

Depending on the data length defined by the PLC (Scanner) the memory map of the I/O data may vary in size.

Assembly output objects are assumed to have a 32-bit Run/Idle header. When mapping assemblies, this header is automatically inserted into the data flow by most Allen-Bradley PLC/SLC devices. This does not require any adaptations.

If your PLC does not support the 32-bit Run/Idle header, add a leading 32-bit header to the output image. Set the data in the header to 0.

Bit 0 of the header can be defined in the process image of your PLC:

- Status 0: Idle mode
- Status 1: Run mode

Assembly input objects (inputs)

Assembly input objects are usually used to monitor the status of the inverter (Adapter) and to query current actual values (e.g. the current speed).

The input objects are mapped in the Adaptermemory from byte 0 and transmitted "modeless".

The inverter does not use a 32-bit header for the real time status. Thus, the start address in the assembly memory map is the real start of the first assembly data element.

Assembly object instances for "AC Drive Profile" technology application

(0x4000 = 5)

Output objects

Attribute (Instance ID)	Byte	Bit 7	Bit 6	Bit 5	Bit 4	Bit 3	Bit 2	Bit 1	Bit 0
20 (0x14)	0						FaultRst		RunFwd (CW)
	1								
	2	Speed Reference (low byte)							
	3	Speed Reference (high byte)							
21 (0x15)	0		NetRef	NetCtrl			FaultRst	RunRev (CCW)	RunFwd (CW)
	1								
	2	Speed Reference (low byte)							
	3	Speed Reference (high byte)							
22 (0x16)	0						FaultRst		RunFwd (CW)
	1								
	2	Speed Reference (low byte)							
	3	Speed Reference (high byte)							
	4	Torque Reference (low byte)							
	5	Torque Reference (high byte)							
23 (0x17)	0		NetRef	NetCtrl			FaultRst	RunRev (CCW)	RunFwd (CW)
	1								
	2	Speed Reference (low byte)							
	3	Speed Reference (high byte)							
	4	Torque Reference (low byte)							
	5	Torque Reference (high byte)							

Input objects

Attribute (Instance ID)	Byte	Bit 7	Bit 6	Bit 5	Bit 4	Bit 3	Bit 2	Bit 1	Bit 0
70 (0x46)	0						Running1 (Fwd, CW)		Faulted
	1								
	2	Speed Actual (low byte)							
	3	Speed Actual (high byte)							
71 (0x47)	0	AtReference	RefFromNet	CtrlFromNet	READY	Running2 (Rev, CCW)	Running1 (Fwd, CW)	Warning	Faulted
	1	Drive State							
	2	Speed Actual (low byte)							
	3	Speed Actual (high byte)							
72 (0x48)	0						Running1 (Fwd, CW)		Faulted
	1								
	2	Speed Actual (low byte)							
	3	Speed Actual (high byte)							
	4	Torque Actual (low byte)							
	5	Torque Actual (high byte)							
73 (0x49)	0	AtReference	RefFromNet	CtrlFromNet	READY	Running2 (Rev, CCW)	Running1 (Fwd, CW)	Warning	Faulted
	1	Drive State							
	2	Speed Actual (low byte)							
	3	Speed Actual (high byte)							
	4	Torque Actual (low byte)							
	5	Torque Actual (high byte)							

Assembly object instances for "User" technology application

(0x4000 = 10000)

Output objects

Attribute (Instance ID)	Byte	Bit 7	Bit 6	Bit 5	Bit 4	Bit 3	Bit 2	Bit 1	Bit 0
110 (0x6E)	0 ... 63	Lenze TA User Output							

Input objects

Attribute (Instance ID)	Byte	Bit 7	Bit 6	Bit 5	Bit 4	Bit 3	Bit 2	Bit 1	Bit 0
111 (0x6F)	0 ... 63	Lenze TA User Input							

Assembly object instances for standard technology applications (generic selection)

Output objects

Attribute (Instance ID)	Byte	Bit 7	Bit 6	Bit 5	Bit 4	Bit 3	Bit 2	Bit 1	Bit 0
112 (0x70)	0 ... 32	Lenze TA Standard Output							

Input objects

Attribute (Instance ID)	Byte	Bit 7	Bit 6	Bit 5	Bit 4	Bit 3	Bit 2	Bit 1	Bit 0
113 (0x71)	0 ... 63	Lenze TA Standard Input							

Assembly object instances for "Speed Control" technology application

(0x4000 = 10)

Configuring the "Speed Control" TA 100

Output objects

Attribute (Instance ID)	Byte	Bit 7	Bit 6	Bit 5	Bit 4	Bit 3	Bit 2	Bit 1	Bit 0
134 (0x86)	0 ... 3	Control signals ▸ 0x5030:010							
	4 ... 7	External velocity override ▸ 0x5030:011							
	8 ... 11	External velocity ▸ 0x5030:012							
	12 ... 15	External velocity offset ▸ 0x5030:013							
	16 ... 19	External acceleration ▸ 0x5030:014							
	20 ... 23	External deceleration ▸ 0x5030:015							
	24 ... 27	External jerk ▸ 0x5030:016							
	28 ... 31	External torque limit ▸ 0x5030:017							

Input objects

Attribute (Instance ID)	Byte	Bit 7	Bit 6	Bit 5	Bit 4	Bit 3	Bit 2	Bit 1	Bit 0
135 (0x87)	0 ... 3	Status signals ▸ 0x5030:110							
	4 ... 7	Status signals limiter ▸ 0x5030:111							
	8 ... 11	Actual velocity ▸ 0x5030:112							
	12 ... 15	Status word 3 (reserved) ▸ 0x5030:113							
	16 ... 19	Error code ▸ 0x5030:114							
	20 ... 23	Actual torque ▸ 0x5030:115							
	24 ... 27	Display value 1 ▸ 0x5030:116							
	28 ... 31	Display value 2 ▸ 0x5030:117							

Assembly object instances for "Table Positioning" technology application

(0x4000 = 20)

Output objects

Attribute (Instance ID)	Byte	Bit 7	Bit 6	Bit 5	Bit 4	Bit 3	Bit 2	Bit 1	Bit 0
136 (0x88)	0 ... 3	Control signals 0x5030:010							
	4 ... 7	External velocity override ▸ 0x5030:011							
	8 ... 11	External velocity ▸ 0x5030:012							
	12 ... 15	External position setpoint 0x5030:023							
	16 ... 19	External acceleration ▸ 0x5030:014							
	20 ... 23	External deceleration ▸ 0x5030:015							
	24 ... 27	External jerk ▸ 0x5030:016							
	28 ... 31	External torque limit ▸ 0x5030:017							

Input objects

Attribute (Instance ID)	Byte	Bit 7	Bit 6	Bit 5	Bit 4	Bit 3	Bit 2	Bit 1	Bit 0
137 (0x89)	0 ... 3	Status signals 0x5030:110							
	4 ... 7	Status signals limiter ▸ 0x5030:111							
	8 ... 11	Actual velocity ▸ 0x5030:112							
	12 ... 15	Actual position0x5030:123							
	16 ... 19	Error code ▸ 0x5030:114							
	20 ... 23	Actual torque ▸ 0x5030:115							
	24 ...27	Display value 1 ▸ 0x5030:116							
	28 ... 31	Display value 2 ▸ 0x5030:117							

Assembly object instances for "Electronic Gearbox" technology application

(0x4000 = 40)

Output objects

Attribute (Instance ID)	Byte	Bit 7	Bit 6	Bit 5	Bit 4	Bit 3	Bit 2	Bit 1	Bit 0
138 (0x8A)	0 ... 3	Control signals 0x5040:010							
	4 ... 7	Control word 1 (reserved) 0x5040:011							
	8 ... 11	Control word 2 (reserved) 0x5040:012							
	12 ... 15	External velocity offset 0x5040:013							
	16 ... 19	Control word 4 (reserved) 0x5040:014							
	20 ... 23	Control word 5 (reserved) 0x5040:015							
	24 ... 27	External base velocity 0x5040:016							
	28 ... 31	External torque limit 0x5040:017							

Input objects

Attribute (Instance ID)	Byte	Bit 7	Bit 6	Bit 5	Bit 4	Bit 3	Bit 2	Bit 1	Bit 0
139 (0x8B)	0 ... 3	Status signals 0x5040:110							
	4 ...7	Status signals limiter 0x5040:111							
	8 ... 11	Actual velocity 0x5040:112							
	12 ... 15	Actual Position 0x5040:113							
	16 ... 19	Error code 0x5040:114							
	20 ... 23	Actual torque 0x5040:115							
	24 ... 27	Display value 1 0x5040:116							
	28 ... 31	Display value 2 0x5040:117							

Assembly object instances for "Sync and Correction" technology application

(0x4000 = 41)

Output objects

Attribute (Instance ID)	Byte	Bit 7	Bit 6	Bit 5	Bit 4	Bit 3	Bit 2	Bit 1	Bit 0
140 (0x8C)	0 ... 3	Control signals 0x5040:010							
	4 ... 7	Control word 1 (reserved) 0x5040:011							
	8 ... 11	Control word 2 (reserved) 0x5040:012							
	12 ... 15	External position offset 0x5040:023							
	16 ... 19	Control word 4 (reserved) 0x5040:014							
	20 ... 23	Control word 5 (reserved) 0x5040:015							
	24 ... 27	External base velocity 0x5040:016							
	28 ... 31	Control word 7 (reserved) 0x5040:027							

Input objects

Attribute (Instance ID)	Byte	Bit 7	Bit 6	Bit 5	Bit 4	Bit 3	Bit 2	Bit 1	Bit 0
141 (0x8D)	0 ... 3	Status signals 0x5040:110							
	4 ... 7	Status signals limiter0x5040:111							
	8 ... 11	Actual velocity0x5040:112							
	12 ... 15	Free Status Word 03 (0x5040:113)0x5040:113							
	16 ... 19	Error code0x5040:114							
	20 ... 23	Actual torque0x5040:115							
	24 ... 27	Display value 10x5040:116							
	28 ... 31	Display value 20x5040:117							

Assembly object instances for "Winder Dancer" technology application

(0x4000 = 50)

Output objects

Attribute (Instance ID)	Byte	Bit 7	Bit 6	Bit 5	Bit 4	Bit 3	Bit 2	Bit 1	Bit 0
142 (0x8E)	0 ... 3	Control signals 0x5050:010							
	4 ... 7	Set diameter 0x5050:011							
	8 ... 11	Set velocity 0x5050:012							
	12 ... 15	Dancer set position 0x5050:023							
	16 ... 19	Dancer control influence 0x5050:024							
	20 ... 23	Actual dancer position 0x5050:025							
	24 ... 27	Control word 6 (reserved) 0x5050:016							
	28 ... 31	Control word 7 (reserved) 0x5050:017							

Input objects

Attribute (Instance ID)	Byte	Bit 7	Bit 6	Bit 5	Bit 4	Bit 3	Bit 2	Bit 1	Bit 0
143 (0x8F)	0 ... 3	Status signals 0x5050:110							
	4 ... 7	Status signals limiter 0x5050:111							
	8 ... 11	Actual velocity 0x5050:112							
	12 ... 15	Actual position 0x5050:113							
	16 ... 19	Error code 0x5050:114							
	20 ... 23	Actual diameter 0x5050:115							
	24 ... 27	Display value 1 0x5050:116							
	28 ... 31	Display value 2 0x5050:117							

Assembly object instances for "Winder Tension" technology application
(0x4000 = 51)

Output objects

Attribute (Instance ID)	Byte	Bit 7	Bit 6	Bit 5	Bit 4	Bit 3	Bit 2	Bit 1	Bit 0
144 (0x90)	0 ... 3	Control signals 0x5050:010							
	4 ... 7	Set diameter0x5050:011							
	8 ... 11	Set velocity0x5050:012							
	12 ... 15	Set tension 0x5050:013							
	16 ... 19	Tension control influence 0x5050:014							
	20 ... 23	Actual tension 0x5050:015							
	24 ... 27	Control word 6 (reserved)0x5050:016							
	28 ... 31	Control word 7 (reserved)0x5050:017							

Input objects

Attribute (Instance ID)	Byte	Bit 7	Bit 6	Bit 5	Bit 4	Bit 3	Bit 2	Bit 1	Bit 0
145 (0x91)	0 ... 3	Status signals 0x5050:110							
	4 ... 7	Status signals limiter0x5050:111							
	8 ... 11	Actual velocity0x5050:112							
	12 ... 15	Actual position0x5050:113							
	16 ... 19	Error code0x5050:114							
	20 ... 23	Actual diameter0x5050:115							
	24 ... 27	Display value 10x5050:116							
	28 ... 31	Display value 20x5050:117							

15.6.1.3 0x28-Motor Data Object

The "Motor Data Object" provides the data basis for motor parameters.

0x28: Motor Data Object

Attribute (Instance ID)	Name	Info / parameter
3	Motor Type	AC Drive motor type 0x5020:026 Default setting: Squirrel cage induction motor 0x5020:026 = 1
6	Rated Current [mA]	Rated motor current ▸ 0x6075
7	Rated Voltage [V]	Rated voltage ▸ 0x2C01:007

15.6.1.4 0x29-Control Supervisor Object

The "Control Supervisor Object" describes all management functions of the device for the motor control.

0x29: Control Supervisor Object

Attribute (Instance ID)	Name	Info / parameter
3	Run1	AC drive control word 0x5030:010: Bit 0 Run forward (CW)
4	Run2	AC drive control word 0x5030:010: Bit 1 Run reverse (CCW)
5	NetCtrl	AC drive control word 0x5030:010: Bit 5 Activate network control
6	State	AC drive status word 0x5030:110: Bit 8 Status bit 0 AC drive status word 0x5030:110: Bit 9 Status bit 1 AC drive status word 0x5030:110: Bit 10 (Drive State) AC drive status word 0x5030:110: Bit 11 Status bit 3
7	Running1	AC drive status word 0x5030:110: Bit 2 Running forward
8	Running2	AC drive status word 0x5030:110: Bit 3 Running reverse
9	Ready	AC drive status word 0x5030:110: Bit 4 Ready
10	Faulted	AC drive status word 0x5030:110: Bit 0 Fault
11	Warning	AC drive status word 0x5030:110: Bit 1 Warning
12	FaultRst	AC drive control word 0x5030:010: Bit 2 Fault reset
13	FaultCode	0x5032:53 Error code
15	CtrlFromNet	AC drive status word 0x5030:110: Bit 5 Network control active

15.6.1.5 0x2A-AC Drive Object

The "AC Drive Object" describes the device-specific functions of the inverter, e.g. speed ramps, torque control etc.

0x2A: AC Drive Object

Attribute (Instance ID)	Name	Info / parameter
3	AtReference	Status Signals 0x5030:110: Bit 7 (Setpoint reached)
4	NetRef	Control signals 0x5030:010: Bit 6 (Activate network setpoint)
6	DriveMode	AC Drive Mode 0x5020:027 • 0 = Vendor specific • 1 = Speed control (Open Loop) • 2 = Speed control (Closed Loop) • 3 = Torque control
7	SpeedActual / $2^{SpeedScale}$ [rpm]	Network actual speed (scaled) = 0x5030:122/$2^{0x5030:028}$
8	SpeedRef / $2^{SpeedScale}$ [rpm]	Network setpoint speed (scaled) = 0x5030:021/$2^{0x5030:028}$
11	TorqueActual / $2^{TorqueScale}$ [Nm]	Network actual torque (scaled) = 0x5030:123/$2^{0x5030:029}$
12	TorqueRef / $2^{TorqueScale}$ [Nm]	Network setpoint torque (scaled) = 0x5030:022/$2^{0x5030:029}$
18	AccelTime	Acceleration time 0x5031:190
19	DecelTime	Deceleration time 0x5031:191
20	LowSpdLimit	Speed - Low limit 0x5031:193
21	HighSpdLimit	Speed - High limit 0x5031:192
22	SpeedScale	Speed scale value 0x5030:028 Scaling of SpeedActual and SpeedRef.
24	TorqueScale	Torque scale value 0x5030:029 Scaling of TorqueActual and TorqueRef.
29	RefFromNet	Status Signals 0x5030:110: Bit 6 (Network setpoint active)

15.6.1.6 0x47-Device Level Ring (DLR) Object

The "Device Level Ring (DLR) Object" provides status information for the DLR protocol. The DLR protocol is a "layer 2" protocol enabling the use of an Ethernet ring topology.

0x47: Device Level Ring (DLR) Object

Attribute (Instance ID)	Name	Information
1	Network Topology	Current network topology • 0: Line topology • 1 Ring topology
2	Network Status	Current network status • 0: Normal • 1 Ring Fault (only for ring topology) • 2: Unexpected Loop Detected (only for line topology) • 3: Partial Network Fault • 4: Rapid Fault/Restore Cycle
10	Active Supervisor Address	IP address and MAC address of the active ring supervisor
12	Capability Flags	Telegram processing method for the ring node implementation • 2: Beacon-based ring node

15.6.1.7 0x48-Quality of Service (QoS) Object

The "Quality of Service (QoS) Object" enables different classifications and prioritizations of the data packets for the EtherNet/IP communication. For this purpose the EtherNet/IP messages are marked with "Differentiated Services Codepoints" (DSCP).

0x48: Quality of Service (QoS) Object

Attribute (Instance ID)	Name	Information
4	DSCP Urgent	Default: 55: Urgent/imperative messages
5	DSCP Scheduled	Default: 47 (Scheduled messages)
6	DSCP High	Default: 43 (Messages with high priority)
7	DSCP Low	Default: 31 (Messages with low priority)
8	DSCP Explicit	Default: 27 ("Explicit Messages"/parameter data)

15.6.1.8 0x67-Lenze Class Object 103

The "Lenze Class (0x67)" provides the image of the input data of the scanner.

The input data for the Scanner is sent to the Scanner via the configured assembly input object instance.

0x67: Lenze Class Object 103

Attribute (Instance ID)	Name	Information
3	I/O image of produced data	Image of the scanner input data

15.6.1.9 0x68-Lenze Class Object 104

The "Lenze Class (0x68)" provides the image of the output data of the scanner.

The output data of the scanner is sent via the configured assembly output object instance.

0x68: Lenze Class Object 104

Attribute (Instance ID)	Name	Information
3	I/O image of consumed data	Image of the scanner output data

15.6.1.10 0x6E-Lenze Class Object 110

The "Lenze Class (0x6E)" enables read or write access to Lenze inverter parameters.

The Lenze parameter must be specified as "Instance" and its subindices as "Attribute".

If there is no subindex, the attribute must be set to "0".

If the engineering tool used does not support the attribute value "0", the value '1' must be entered.

Configuration of a display parameter by "Set_Attribute_Single" is not possible.

0x6E: Lenze Class Object 110

Service Type	Instance	Attribute (Instance ID)	Data
Get_Attribute_Single Set_Attribute_Single	Index number of the Lenze parameter	Subindex number of the Lenze parameter or 0x01 for parameters without subindex.	Value of the parameter or subindices

15.6.1.11 0xF5-TCP/IP Interface Object

The "TCP/IP Interface Object" is used to configure the TCP/IP network interface of the device.

0xF5: TCP/IP Interface Object

Attribute (Instance ID)	Name	Info / parameter
1	Status	Current status of the TCP/IP network interface
2	Configuration Capability	Possible options for TCP/IP configuration • DHCP client • Config. Settable • ACD capable
3	Configuration Control	Type of the TCP/IP configuration 0x23A1:005 Possible values for bit 0 ... 3 • 0000: Static TCP/IP configuration • 0010: TCP/IP configuration via DHCP
4	Physical Link Object	Path to "Physical Link Object"
5	Interface Configuration	Current TCP/IP configuration • IP address: 0x23A1:001 • Subnetwork: 0x23A1:002 • Gateway: 0x23A1:003 "Interface Configuration Change Requires Reset" is not supported, i.e. a write access to attribute 5 is implemented immediately!
6	Host Name	Host name: 0x23A1:004
8	TTL Value	TTL value for EtherNet/IP multicast data packages: 0x23A1:006
9	Mcast Config	Multicast settings • Multicast assignment: 0x23A1:007 • Multicast IP address: 0x23A1:008 • Multicast number: 0x23A1:009
10	SelectAcd	Activate address conflict detection (ACD) 0x23A7 • 0: Deactivate ACD • 1 Activate ACD
11	LastConflictDetected	ACD diagnostic information about the last address conflict that occurred.
13	Encapsulation Inactivity Timeout	Number of seconds of inactivity before the TCP connection session is closed.

15.6.1.12 0xF6-Ethernet Link Object

The "Ethernet Link Object" provides general information and status information of the Ethernet interfaces (IEEE 802.3)

Instance 1 for interface X266, instance 2 for interface X267.

0xF6: Ethernet Link Object

Attribute (Instance ID)	Name	Info / parameter
1	Interface Speed	Current baud rate • 10 Mbps • 100 Mbps
2	Interface Flags	Status bits of the Ethernet interface The change of an attribute of the interface configuration becomes effective immediately.
3	Physical Adress	MAC address of the Ethernet interface: 0x23A2:005
4	Interface Counters	Interface-specific counter
5	Media Counters	Media-specific counter
6	Interface Control	Interface settings • Port 1: 0x23A4:001 • Port 2: 0x23A4:002
7	Interface Type	Twisted Pair is supported.
8	Interface State	Interface status
9	Admin State	Administrative setting of the interface status • Enable interface • Disable interface
10	Interface Label	Text for the identification/designation of the Ethernet interface • X266 (instance 1) • X267 (instance 2)
11	Interface Capability	• Manual settings are effective immediately (no reset required). • Autonegotiation is supported. • Auto-MDIX is supported. • Manual setting of Speed and Duplex is supported.

15.6.2 Commissioning

The steps required to control the device as an EtherNet/IP adapter with a Rockwell EtherNet/IP scanner are described below.

Preconditions

- The inverter is networked as EtherNet/IP Adapter with an EtherNet/IP Scanner and, if necessary, further EtherNet/IP nodes.
  - Typically, an EtherNet/IP network consists of segments that contain point-to-point connections in a star configuration.
  - See also "Typical topologies" under: ▸ EtherNet/IP 📖 395
- An Engineering PC with the programming software »RSLogix™ 5000« (from version 20) is connected to the Scanner.
- Current device description files for EtherNet/IP are available.
  - Download of current EDS files

The EDS file of the i950 supports AOP (Add On Profile). The tags used are matched to the Lenze applications. This gives the user a better understanding when configuring with »RSLogix™ 5000«.

As of inverter firmware V1.6.x, the EDS file with the name **Lenze_i951_ACD_V2.eds** must be used.

  - The »EDS Hardware Installation Tool« of the »RSLogix™ 5000« installs the EDS files.
- An »RSLogix™ 5000« project has been created and is in the offline state.
- The CPU and Ethernet adapter of the PLC ((Scanner)) have been configured.
- All EtherNet/IP nodes are supplied with voltage and are switched on.

15.6.2.1 Required commissioning steps

How to configure the network with "RSLogix™ 5000" (from version 20):

- The PC with the programming software »RSLogix™ 5000« must be in the same network as the devices to be configured.

1. **Configure IP communication.**
   1. Make basic IP settings on the engineering PC.
   2. Via the Rockwell tool »BootP-DHCP Tool«, set a DHCP server or the »EASY Starter«:
      a) IP address of the inverter (adapter) 0x23A1:001
      b) Subnetwork mask 0x23A1:002
      c) Gateway address 0x23A1:003
   3. Save parameter settings: 0x2022:003 = "On / start [1]"
   4. Restart the EtherNet/IP communication: 0x23A0 = "Restart with current values [1]"
      The configuration of the IP communication is now completed.
2. **Configure technology application:**
   1. Select technology application: 0x4000 > 1.
   2. Select TA interface: 0x4001 = 0 "Fieldbus network"
   3. Save parameter settings: 0x2022:003 = "On / start [1]"
      The technology application is now controlled via the scanner.
3. **Define I/O configuration:**
   1. Start »RSLogix™ 5000«.
   2. Open or recreate a »RSLogix™« project.
   3. Configure the cyclic data transfer (Implicit Messaging).

      ▸ Network configuration of the inverter with EDS file 📖 412

      ▸ Network configuration of the inverter without EDS file 📖 418
   4. Configure the acyclic data transfer (Explicit Messaging).

      ▸ Parameter data transfer 📖 424

      The configuration of the network is now completed.
4. **Complete the commissioning:**
   1. Save the "RSLogix™" project and load the configuration into the PLC (scanner).

      ▸ Save »RSLogix™« project/Load configuration into the Scanner 📖 408
   2. Restart communication, when the EtherNet/IP configuration has been changed.

      ▸ Restarting or stopping the communication 📖 409

Commissioning is completed.

15.6.2.2 Save »RSLogix™« project/Load configuration into the Scanner

To save the "RSLogix™" project and load the configuration into the PLC (scanner):

1. **Save »RSLogix™« project:**
   1. Click ""File"" in the upper toolbar.
   2. Execute the "Save" menu command.
      The configuration is saved in a file on your PC.
2. **Load configuration into the scanner:**
   1. Click "Communications" in the upper toolbar.
   2. Execute the "Download" menu command.
      The "Download" dialog box is opened.
   3. Click "Download".
      The configuration is loaded into the Scanner.

If the download has been completed successfully, »RSLogix™« changes to the online mode.

The I/O-OK field in the upper left area of the screen is green.

15.6.2.3 Restarting or stopping the communication

The communication needs to be restarted after the EtherNet/IP configuration is changed, so that the changed settings can take effect.

For restarting communication, there are two options:

- Switch inverter off and on again.
- 0x23A0 Set = "Restart with current values [1]".

Parameter

Address	Name / setting range / [default setting]		Information
0x23A0	EtherNet/IP communication		Restart / stop communication. • When the device command has been executed successfully, the value 0 is shown. • A communication restart has nothing to do with the acceptance of the described operating modes. For this purpose, a restart of the device is required!
	0	**No action/no error**	Only status feedback
	1	Restart with current values	Restart communication with the current values.
	2	Restart with default values	Restart communication with the standard values.
	5	Stop network communication	Stop communication.
	10	In process	Only status feedback
	11	Action cancelled	
	12	Fault	

15.6.3 Basic setting and options

Parameter

Address	Name / setting range / [default setting]		Information
0x23A1:001	EtherNet/IP settings: IP address 0.0.0.0 ... [**192.168.124.16**] ... 255.255.255.255		Set IP address.
0x23A1:005	EtherNet/IP settings: IP configuration		Set IP configuration.
	0	Stored IP	The currently saved IP configuration is used.
	2	**DHCP**	The IP configuration is assigned by the Scanner via DHCP. The assignment of a gateway address that is not in the same subnetwork as the IP address, is denied. ⚠ CAUTION! If the inverter (Adapter) is connected to the network but is not assigned an IP address via DHCP for approx. 40 s, the command Restart with current values 0x23A0 = "[1]" is triggered automatically. This process repeats cyclically until an IP address has been assigned via DHCP.
0x23A1:002	EtherNet/IP settings: Subnet 0.0.0.0 ... [**255.255.255.0**] ... 255.255.255.255		Set subnet mask.
0x23A1:003	EtherNet/IP settings: Gateway 0.0.0.0 ... [**0.0.0.0**] ... 255.255.255.255		Set gateway address.
0x23A1:004	EtherNet/IP settings: Host name		Set host name. • String with up to 64 characters.
0x23A1:006	EtherNet/IP settings: Multicast TTL 0 ... [**1**] ... 255		Setting of the multicast TTL value for the validity period of data packets in the network. The TTL value defines the number of hops that the multicast message can distribute via routers.
0x23A1:007	EtherNet/IP settings: Multicast allocation		Selection for multicast-IP addressing.
	0	**Default allocation**	
	1	Multicast number/start address	
0x23A1:008	EtherNet/IP settings: Multicast IP address 0.0.0.0 ... [**239.64.2.224**] ... 255.255.255.255		Set multicast IP address.
0x23A1:009	EtherNet/IP settings: Multicast number 1 ... [**1**] ... 10		Set multicast number.

Address	Name / setting range / [default setting]		Information
0x23A4:001	Port 1		Set baud rate for Ethernet port 1.
	0	**Auto-Negotiation**	
	5	10 Mbps/Half Duplex	
	6	10 Mbps/Full Duplex	
	7	100 Mbps/Half Duplex	
	8	100 Mbps/Full Duplex	
0x23A4:002	Port 2		Set baud rate for Ethernet port 2.
	0	**Auto-Negotiation**	
	5	10 Mbps/Half Duplex	
	6	10 Mbps/Full Duplex	
	7	100 Mbps/Half Duplex	
	8	100 Mbps/Full Duplex	
0x23A7	Address conflict detection		Activate address conflict detection (ACD) (enable). • If this value is changed, the device must be reset ("Power off/on" or "Type 0 Reset").
	0	Disabled	
	1	**Enabled**	

15.6.4 Process data transfer

In addition to the defined AC drive profile, the inverter supports customer-specific configurations.

I/O-Konfiguration

The I/O configuration defines which parameters are transferred using the assembly objects.

There are two ways to configure the cyclic data transfer (Implicit Messaging) in »RSLogix™ 5000« (from version 20):

- Network configuration of the inverter with EDS file 412 (recommended)
- Network configuration of the inverter without EDS file 418 (as "Generic Ethernet Module“)

15.6.4.1 Network configuration of the inverter with EDS file

The cyclic data transfer (Implicit Messaging) with EDS file is set up in 3 steps.

Preconditions

The inverter is registered with its EDS device description file in the »RSLogix™ 5000« programming software.

Download EDS device description for Lenze EtherNet/IP communication modules

Step 1 - Set up a new Ethernet device:

1. Go to the "Controller Organizer" under "I/O Configuration" → "Ethernet" and execute the menu command "New Module" with a right-click.

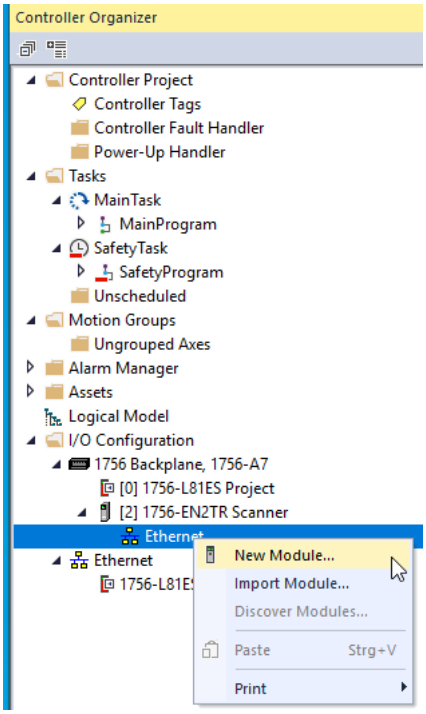

2. Select the "i95A i950 Servo Drive“ module type in the dialog box.

   Open the dialog "Select Module Type".

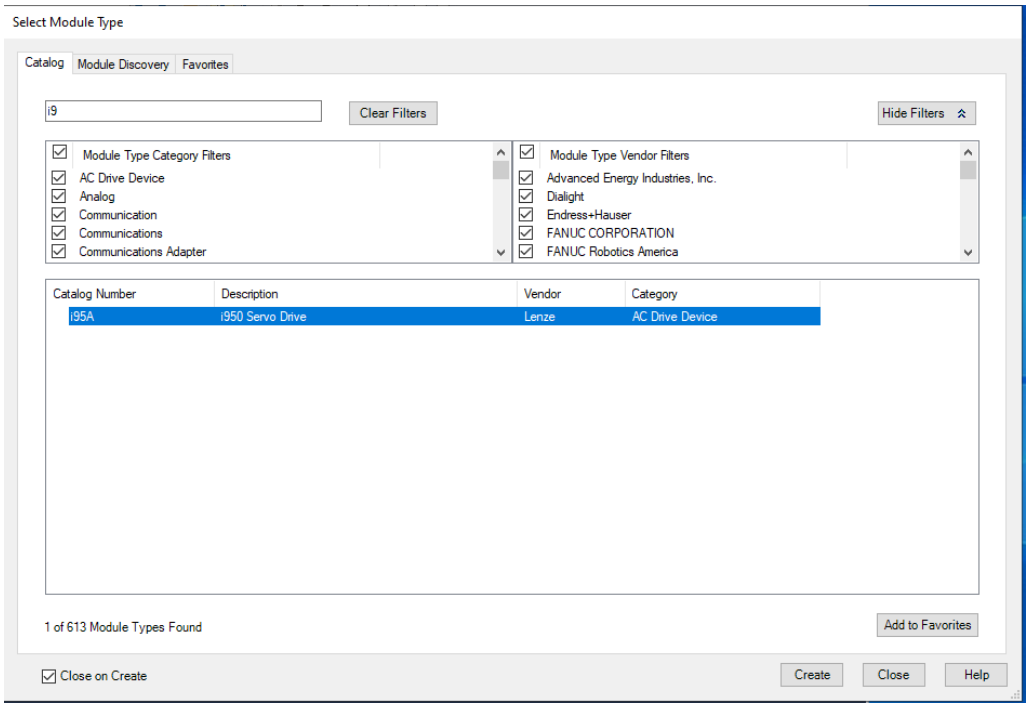

3. Open tab "Catalog".
   a) Filter by "i9" or "lenze".
   b) Select the ""i95A"" catalog.
4. Click "Create".

   The "New Module" dialog box is opened.

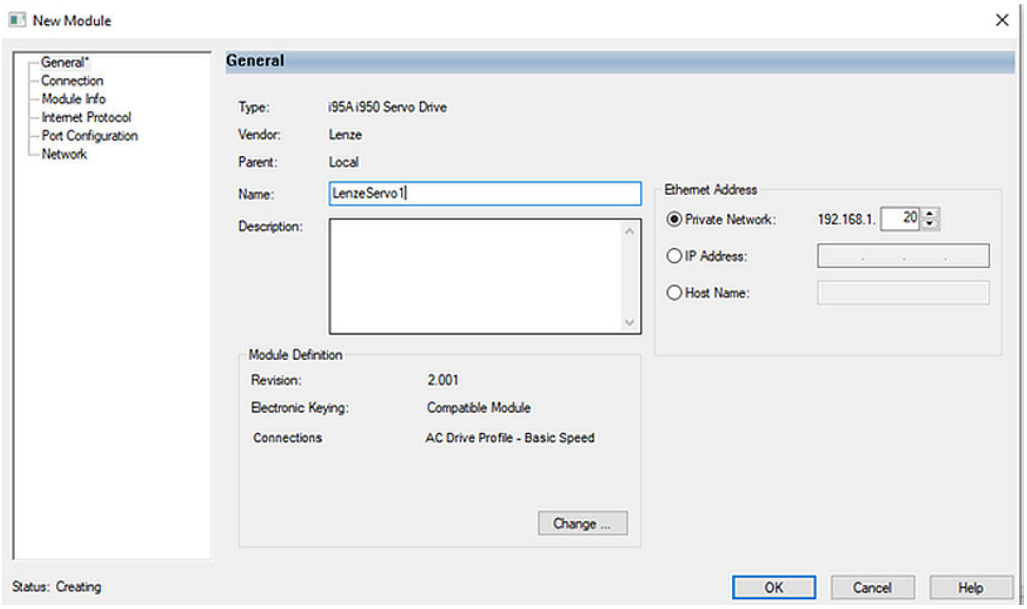

5. Select the dialog "General".
   a) Assign a name for the inverter.
   b) Assign an **unambiguous** IP address.

DNS is not supported.

The host name only describes the device.

6. Click "Change".
7. Open the "Module Definition" dialog box.

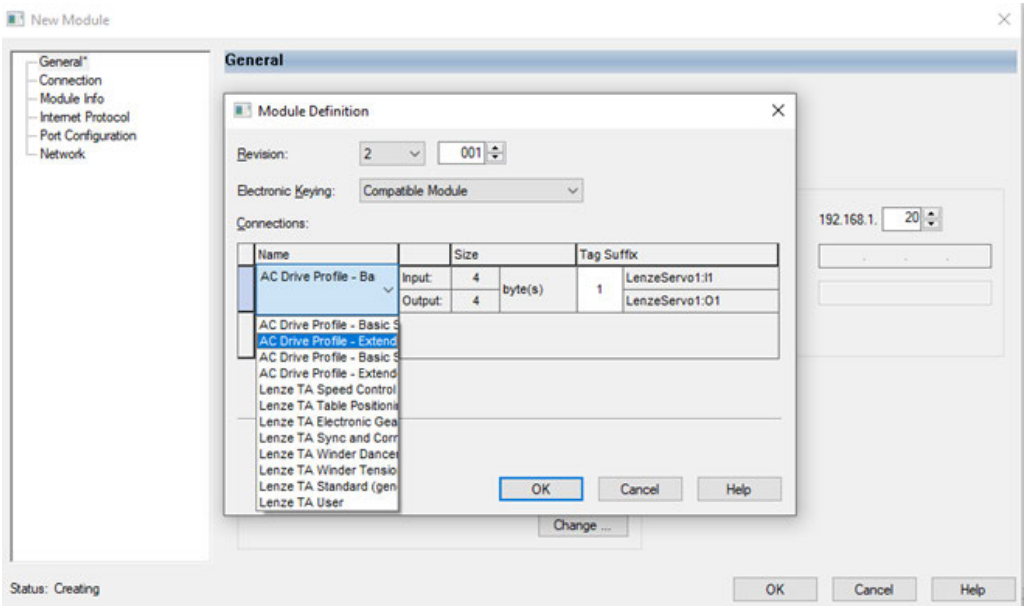

Access to the I/O data for the technology application selected and active in the inverter is defined here. See table.

Only "Exclusive Owner“ connections are supported.

The selection of the technology application in the inverter must match the selection of the technology application from the EDS file.

Connection Name	Size [Bytes]		Selected technology application in the inverter		Comment
	Input	Output	Name	0x4000 =	
AC Drive Profile – Basic Speed	4	4	"AC Drive Profile" technology application	5	Corresponds to the ODVA profile "AC Drive Speed/ Torque"
AC Drive Profile – Extended Speed	4	4			
AC Drive Profile – Basic Speed and Torque	6	6			
AC Drive Profile – Extended Speed and Torque	6	6			
Lenze TA Speed Control	32	32	"Speed Control" technology application	10	
Lenze TA Table Positioning	32	32	"Table Positioning" technology application	20	
Lenze TA Electronic Gearbox	32	32	"Electronic Gearbox" technology application	40	
Lenze TA Sync and Correction	32	32	"Sync and Correction" technology application	41	
Lenze TA Winder Dancer	32	32	"Winder Dancer" technology application	50	
Lenze TA Winder Tension	32	32	"Winder Tension" technology application	51	
Lenze TA User	1 … 64	1 … 64	"User" technology application	10000	
Lenze TA Standard (generic)	32	32	Other technology applications	>1 and <100	Use selection for Lenze standard technology applications not listed in this table

Step 2 - Set up connection:

1. Open the "Connection“ dialog box.

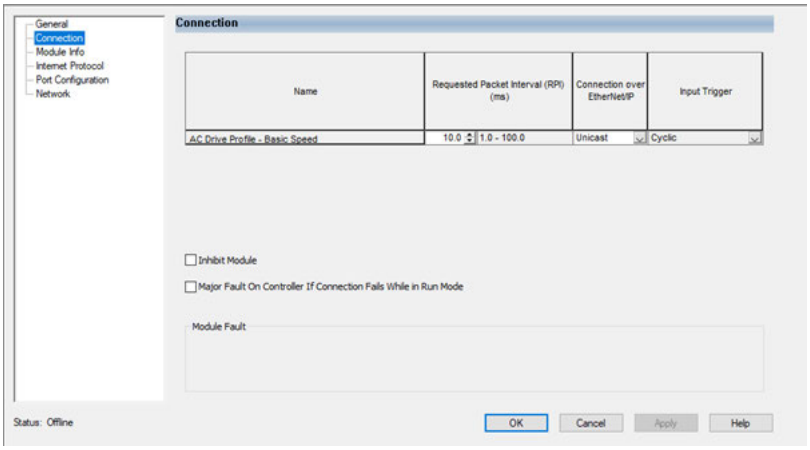

2. Set "Requested Packet Interval (RPI)" (cycle with which the inverter is scanned by the scanner).

Default setting = 10 ms

For most applications, it is not necessary to scan the inverter more frequently.

Minimum value = 1 ms.

3. Select connection type: "Unicast" or "Multicast“.
4. Optional settings
   a) "Inhibit Module": Activate locks the inverter.
   b) "Major Fault On Controller If Connection Fails While in Run Mode": Activate switches the inverter to "Error" if the EtherNet/IP connection to the inverter is lost during operation.
5. Click "OK".
6. Assembly tags are created in the "Controller Organizer" under "Controller" → "Controller Tags".

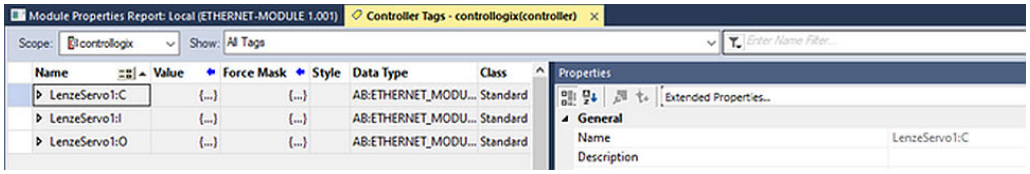

In the sample configuration with the "LenzeServo1" inverter, these three assembly tags are generated:

"LenzeServo1:C" for the configuration assembly

"LenzeServo1:I" for the input assembly

"LenzeServo1:O" for the output assembly

Clicking the icon in front of the assembly names expands the display of the assemblies.

Since the EDS file supports "EDS Add-On Profile (AOP)", the input tags and the output tags are named application-specifically. The assignment of an alias tag is thus not necessary.

The network configuration of the inverter is now complete.

Step 3 - Save configuration:

1. Save the "RSLogix™" project and load the configuration into the PLC (scanner).

Save »RSLogix™« project/Load configuration into the Scanner 📖 408

The configuration with the EDS file is now complete.

Example for an output assembly

Display of the 2 words of the output assembly "LenzeServo1:O" when using the TA Speed Control:

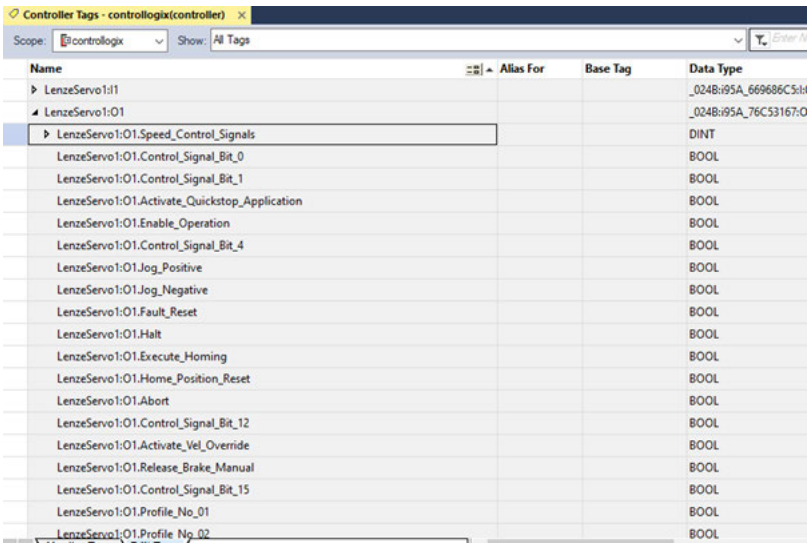

15.6.4.2 Network configuration of the inverter without EDS file

The cyclic data transfer (Implicit Messaging) without EDS file is set up in 4 steps.

Step 1 - Set up a new Ethernet device:

1. Go to the "Controller Organizer" under "I/O Configuration" → "Ethernet" and execute the menu command "New Module" with a right-click.

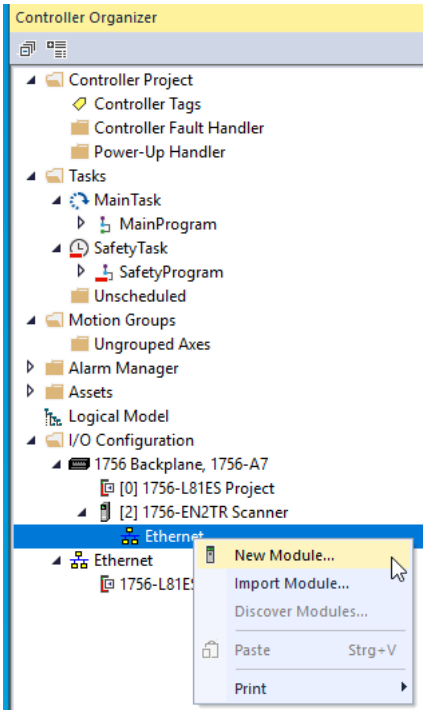

2. Select the "ETHERNET MODULE Generic Ethernet Module" module type in the dialog box.

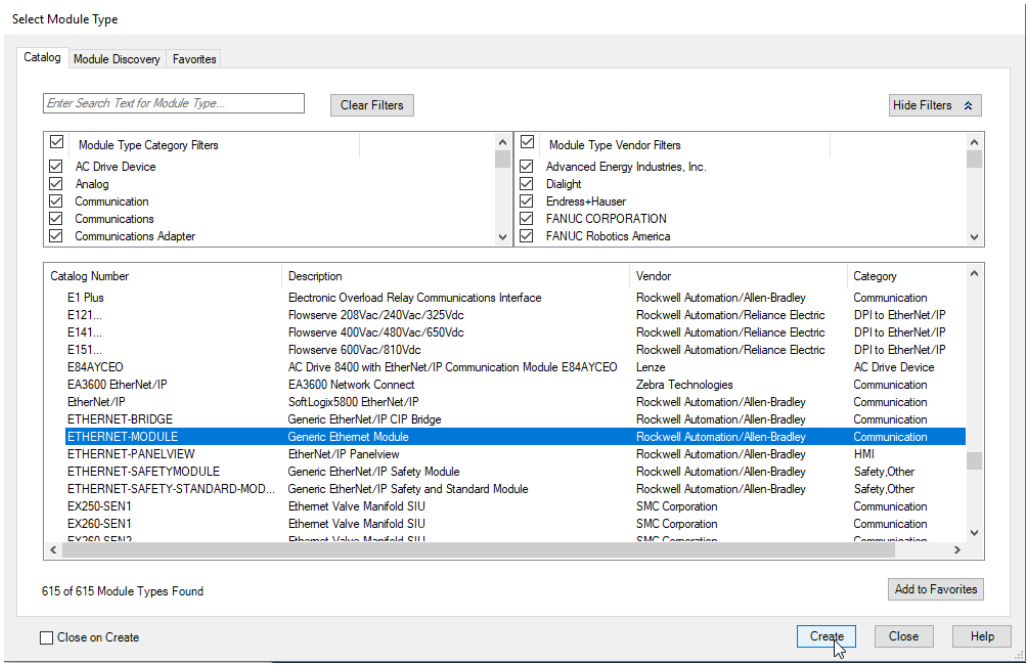

3. Click "Create".
   The "New Module" dialog box is opened.
4. Fill in input fields.

The example shows the configuration for the Lenze standard technology application "Speed Control". 0x4000 = 10

The assembly input object 135 is used for reading status information of the inverter and the assembly output object 134 is used for controlling the inverter.

If another technology application is used, the assigned assembly objects must be used: ▸ 0x04-Assembly Object 📖 397

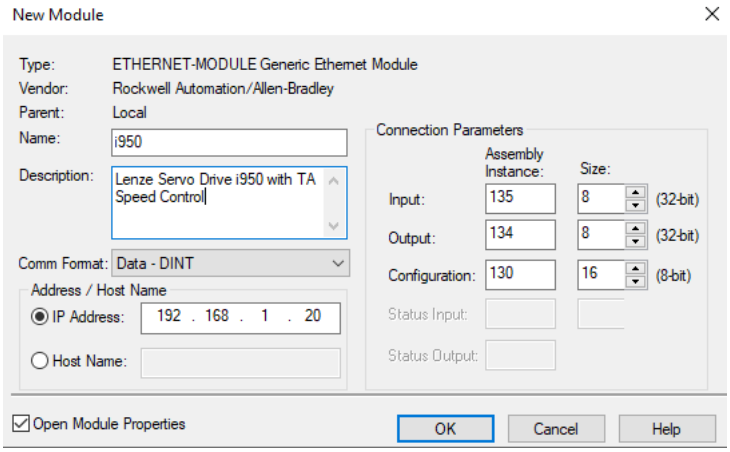

a) "Name:" The name to be entered should refer to the process or the device. Select
b) "Comm Format:" Data - DINT because the data in assembly objects are available in 32-bit integer words.
c) "IP Address:" The inverter (adapter) must be in the same subnetwork as the PLC (scanner). The subnetwork corresponds to the first 3 bytes of the IP address. ▸ Basic setting and options 📖 409
d) Enter "Connection Parameters":

   "Input:" Assembly Instance = 135, Size = 8

   "Output:"Assembly Instance = 134, Size = 8

   "Configuration:"Assembly Instance = 130, Size = 16

5. Click "OK".

   The "Module Properties Report: ..." dialog box is opened.

Step 2 - Set up connection:

1. Click the "Module Properties Report: ..." tab in the "Connection" dialog box.

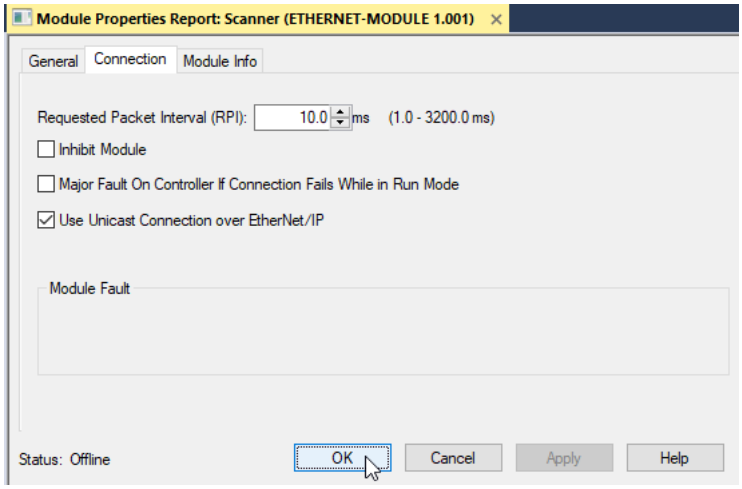

2. Set "Requested Packet Interval (RPI)" (cycle with which the inverter is scanned by the scanner).

The default setting is 10.0 ms. For most applications, it is not necessary to scan the inverter more frequently.

The minimum value is 1.0 ms.

3. Select connection type: "Unicast" or "Multicast“.

   For this purpose, activate/deactivate "Use Unicast Connection over EtherNet/IP".

4. Optional settings:
   a) "Inhibit Module": Activate locks the inverter.
   b) "Major Fault On Controller If Connection Fails While in Run Mode": Activate switches the inverter to "Error" if the EtherNet/IP connection to the inverter is lost during operation.
5. Assembly tags are created in the "Controller Organizer" under "Controller" → "Controller Tags".

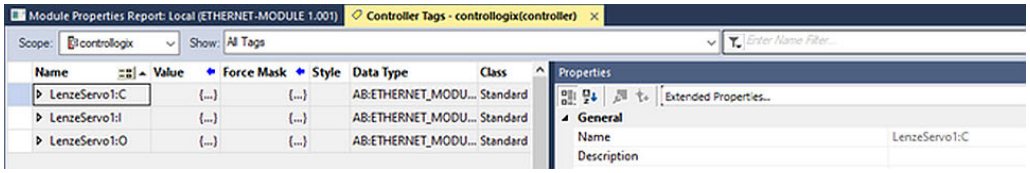

6. Click "OK".
   In the sample configuration with the "LenzeServo1" inverter, these three assembly tags are generated:

   "LenzeServo1:C" for the configuration assembly

   "LenzeServo1:I" for the input assembly

   "LenzeServo1:O" for the output assembly

   Clicking the icon in front of the assembly names expands the display of the assemblies.

Step 3 - Create alias tags for individual bits of the assemblies:

1. Go to "Controller Organizer" under "Controller" and open the "Controller Tags".
2. Right-click any tag to execute the "New Tag" context menu command.
   The "New Tag" dialog box is opened.

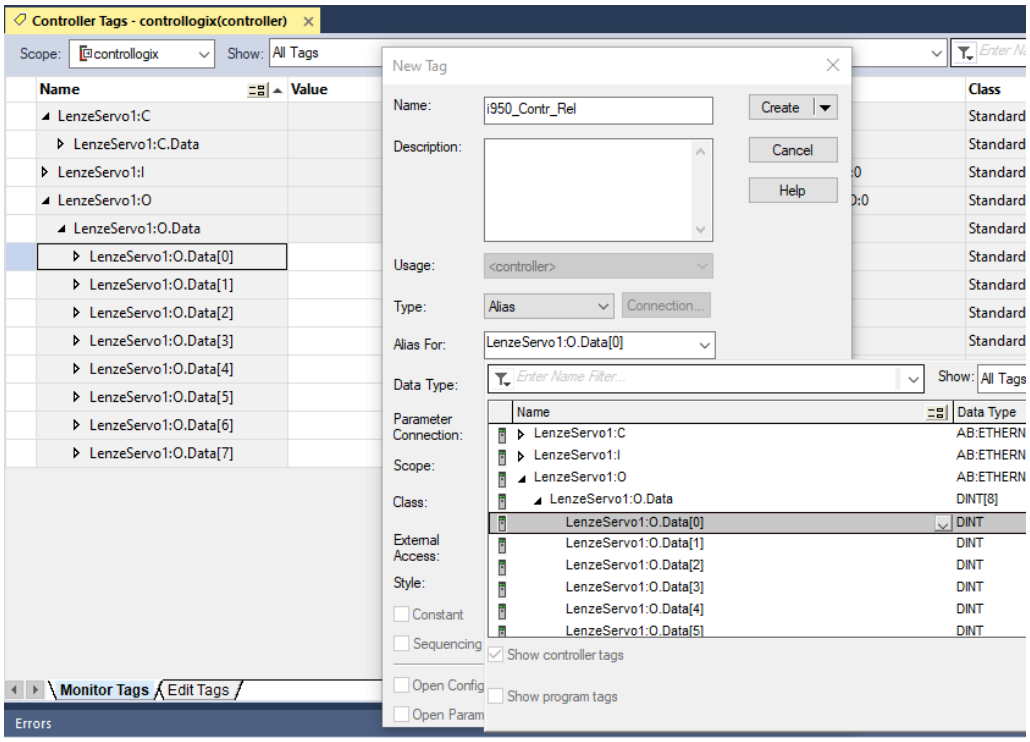

3. Fill in input fields (example):
   a) "Name:" Enter the name for the alias tag, e.g. "i950_Contr_Rel".
   b) Select "Type:" "Alias".
   c) "Alias For:" Select the assembly tag. e.g. assign the double word 0 (LenzeServo1:O.Data[0]) to the alias "i950_Contr_Rel" in the output assembly.
4. Click "Create".
   The new alias tag is added to the database.
5. If necessary, create additional alias tags.

The network configuration of the inverter is now complete.

Step 3 - Save configuration:

1. Save the "RSLogix™" project and load the configuration into the PLC (scanner).

Save »RSLogix™« project/Load configuration into the Scanner 📖 408

The configuration without the EDS file is now complete.

Example for an output assembly

Example: Display of the 8 double words of the output assembly "LenzeServo1:O":

Controller Tags - controllogix(controller)

Scope: controllogix Show: All Tags

Name	Value	Force Mask	Style	Data Type
LenzeServo1:C	{...}	{...}		AB:ETHERNET_MODULE:C:0
LenzeServo1:I	{...}	{...}		AB:ETHERNET_MODULE_DINT_32Bytes:I:0
LenzeServo1:O	{...}	{...}		AB:ETHERNET_MODULE_DINT_32Bytes:O:0
LenzeServo1:O.Data	{...}	{...}	Deci...	DINT[8]
LenzeServo1:O.Data[0]	0		Deci...	DINT
LenzeServo1:O.Data[1]	0		Deci...	DINT
LenzeServo1:O.Data[2]	0		Deci...	DINT
LenzeServo1:O.Data[3]	0		Deci...	DINT
LenzeServo1:O.Data[4]	0		Deci...	DINT
LenzeServo1:O.Data[5]	0		Deci...	DINT
LenzeServo1:O.Data[6]	0		Deci...	DINT
LenzeServo1:O.Data[7]	0		Deci...	DINT

15.6.5 Parameter data transfer

Acyclic data transfer (Explicit Messaging)

Via the acyclic data transfer (Explicit Messaging) the PLC (Scanner) can access any drive parameters or device parameters.

Typical applications:

- Monitoring
- Non-timed parameter access with low priority
- Writing and reading the parameter data of the inverter (Adapter)
- Writing and reading the assembly data of an EtherNet/IP device

The acyclic data transfer can be monitored: ▸ EtherNet/IP communication monitoring 📖 427

If the Allen-Bradley control systems »CompactLogix™ «, »ControlLogix®« and »SoftLogix™« are used, the "Explicit Message" instruction provides the functionalities described in the following sections.

Further PLC types can be found in the programming documentation of the PLC.

Explizite Meldung

An explicit message is a logic instruction in the PLC program for the message transfer.

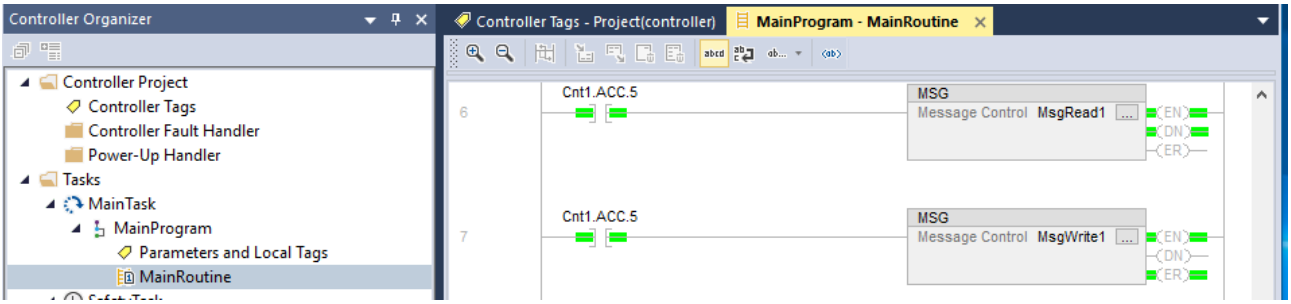

- General drive variables (parameters and subindices) are contained in class "0x6E".
  - The instance is the index number of the parameter and the attribute is the subindex number.
  - If there is no subindex, the attribute must be set to "0". The attribute value "1" is supported only for those clients that do not support attribute value "0".
- Possible data types of the variables:
  - SINT (8 bits, 1-byte objects)
  - INT (16 bits, 2-byte objects)
  - DINT (32 bits, 4-byte objects)
- Device parameters and PLC program variables must have the same data lengths!

Explicit Message Path

For each explicit message, the path must be specified in order to forward the message from the Ethernet port of the PLC (scanner) to the IP address of the inverter (adapter). This path depends on the used PLC. If required, contact the PLC manufacturer to find out how the path is specified.

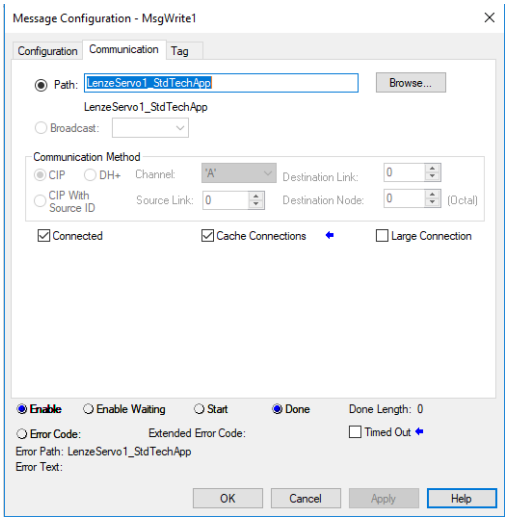

Read parameter value

Definitions to read a parameter value (Adapter → Scanner):

- Message Type = CIP Generic
- Service Code = 0x0E (read parameter, Get_Attribute_Single)
- Class = 0x6E (hex)
- Instance = index number of the parameter
- Attribute = parameter subindex number (or 0x01 in case of no subindex)
- Destination Element = target variable in the PLC (scanner) for the parameter data to be read.

  The variable must have the same format and data length as the parameter!

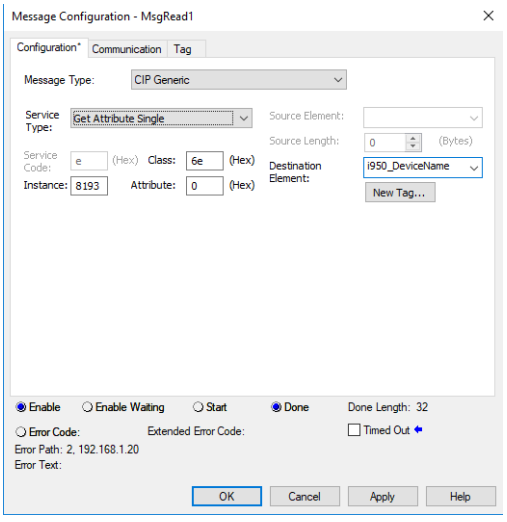

Write parameter value

Definitions to write a parameter value (Scanner → Adapter):

- Message Type = CIP Generic
- Service Code = 0x10 (write parameter, Set_Attribute_Single)
- Class = 0x6E
- Instance = index number of the parameter
- Attribute = parameter subindex number (or 0x01 in case of no subindex)
- Source Element = variable in the PLC (scanner) which is used as source of the parameter data to be written.
- Source Length = data length (bytes) of the data to be written

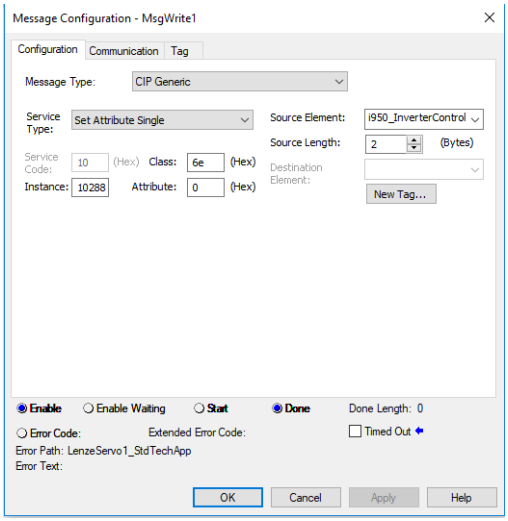

CIP Generic Master (read/write assembly data)

For "CIP Generic Master" that do not support Implicit Messaging (class1), the assembly data can be read or written via Explicit Messaging (class3).

Settings to read assembly data (Adapter → Scanner):

- Message Type = CIP Generic
- Service Code = 0x0E (read assembly data, Get_Attribute_Single)
- Class = 0x04
- Instance = assembly number in the desired device (e.g. 73 for assembly "73")
- Attribute = 0x03
- Destination Element = target array in the PLC (scanner) for the assembly data to be read.

  The array must have the DINT format and the same data length as the desired assembly!

Settings to write assembly data (Scanner → Adapter

- Message Type = CIP Generic
- Service Code = 0x10 (write assembly data, Set_Attribute_Single)
- Class = 0x04
- Instance = assembly number in the desired device (e.g. 23 for assembly "23")
- Attribute = 0x03
- Source Element = DINT array in the PLC (scanner), that is used as source of the assembly data to be written.
- Source Length = data length (bytes) of the DINT array to be written.

15.6.6 Monitoring

Parameters for setting the network monitoring functions

15.6.6.1 EtherNet/IP communication monitoring

Implicit Messaging Timeout

The inverter (adapter) monitors the I/O connection to the scanner. If no "Implicit Message" has been received within the timeout parameterized by the scanner for implicit messages, the reaction set in 0x2859:001 is triggered in the inverter.

Explicit Messaging Timeout

If no "Explicit Message" has been received within the timeout parameterized by the scanner for explicit messages, the reaction set in 0x2859:006 is triggered in the inverter.

Timeout for process controlling write accesses

The monitoring time set in 0x23A1:010 is used to monitor process-controlling write accesses to technology applications.

Write accesses within this monitoring time reset the watchdog. After the monitoring time has elapsed, the response set in 0x2859:007 is triggered in the inverter.

The following is monitored:

Acyclic write accesses (Explicit Messages) to the following attributes

- Write accesses to the data attribute of the output object of the assembly object instance of the TA. ▸ 0x04-Assembly Object 🕮 397
- Write accesses to the Lenze Class Object 104/0x68, Instance 1, Attribute 3 (I/O image of consumed data). ▸ 0x68-Lenze Class Object 104 🕮 404
- Write accesses to the AC Drive Class Object 42/0x2A, Instance 1 ▸ 0x2A-AC Drive Object 🕮 403
  - Attribute 4 (NetRef)
  - Attribute 8 (SpeedRef)
  - Attribute 12 (TorqueRef)
- Write accesses to the Control Supervisor Class Object 41/0x29, Instance 1 ▸ 0x29-Control Supervisor Object 🕮 403
  - Attribute 3 (Run1)
  - Attribute 4 (Run2)
  - Attribute 5 (NetCtrl)

Cyclic write accesses (Implicit Messages)

- A Exclusive Owner connection associated with the current TA is established, which exchanges valid I/O data within the parameterized timeout time.

The following write accesses to Lenze parameters do **not** reset the watchdog:

Write accesses to the Lenze Class Object 110/0x6E via Explicit Messaging.
▸ 0x6E-Lenze Class Object 110 🕮 405

Write accesses via EASY Starter

Parameter

Address	Name / setting range / [default setting]	Information
0x23A1:010	EtherNet/IP settings: Timeout 0 ... [**10000**] ... 65535	Setting of the maximum permissible time-out for the CIP communication. When the specified monitoring time has elapsed, the response set in 0x2859:007 is triggered in the inverter.

Address	Name / setting range / [default setting]		Information
0x2859:007	Network monitoring: Timeout communication		Selection of the response to the time-out during the CIP communication. The monitoring time for the CIP communication is defined in 0x23A1:010. Associated event ID: • 822313236 | 0x31038114 - Network - Overall communication time-out
	0	No response	▸ Severity 574
	1	Fault > CiA402	
	2	**Warning**	
0x2859:001	Network monitoring: Watchdog elapsed		Selection of the response to a permanent interruption of the communication to the IO controller. Associated event ID: • 822313360 | 0x31038190 - Network - Watchdog time-out
	0	No response	▸ Severity 574
	1	Fault > CiA402	
	2	**Warning**	
0x2859:006	Network monitoring: Time-out explicit message		Selection of the response to timeouts during transfer of Explicit Messages.
	0	No response	▸ Severity 574
	1	Fault > CiA402	
	2	**Warning**	

15.6.6.2 Other monitoring

Parameter

Address	Name / setting range / [default setting]		Information
0x2859:003	Network monitoring: Invalid configuration		Selection of the response triggered by the reception of invalid configuration data. Associated event ID: • 822313607 | 0x31038287 - Network - Invalid configuration
	0	No response	▸ Severity 574
	1	Fault > CiA402	
	2	**Warning**	
0x2859:004	Network monitoring: Initialisation error		Selection of the response triggered by the occurrence of an error during the initialization of the network component. Associated event ID: • 822313362 | 0x31038192 - Network - Initialization error
	0	No response	▸ Severity 574
	1	Fault > CiA402	
	2	**Warning**	
0x2859:005	Network monitoring: Invalid process data		Selection of the response triggered by the reception of invalid process data. Process data marked as invalid (IOPS is "BAD") are received by the IO Controller. Typically in case of • a PLC in STOP state, • alarms, • acyclic demand data. Associated event ID: • 822313363 | 0x31038193 - Network - Invalid cyclic process data
	0	No response	▸ Severity 574
	1	Fault > CiA402	
	2	**Warning**	

15.6.7 Diagnostics

15.6.7.1 LED status display

The "MS" LED indicate the CIP module status.

LED "MS" (green/red)	CIP module status	Status/meaning
off	Nonexistent	The network option is not supplied with voltage.
On (green)	Operational	The network option works correctly.
Blinking green	Standby	The network option is not configured completely or the configuration is incorrect.
Blinking red	Major recoverable fault	The network option contains a correctable error.
on (red)	Major unrecoverable fault	The network option contains a non-correctable error.
Blinking green/red	Device self testing	The network option executes a self-test.

The "NS" LED indicate the CIP network status.

LED "NS" (green/red)	CIP network status	Status/meaning
off	No IP address	The network option is not supplied with voltage or has not received an IP address yet.
On (green)	Connected	The network option works correctly and has established a connection to the scanner.
Blinking green	No connections	The network option • works correctly, • has been assigned to an IP address, • has not been implemented into the network yet by the scanner.
Blinking red	Connection timeout	A time-out has occurred.
on (red)	Duplicate IP	The network option cannot access the network (IP address conflict).
Blinking green/red	Device self testing	The network option executes a self-test.

Status displays at the RJ45 sockets

The LEDs at the RJ45 sockets indicate the connection status to the network:

LED "Link" (green)	Status/meaning
off	No connection to the network.
on	A physical connection to the network is available.

LED "Activity" (yellow)	Status/meaning
off	No data transfer.
on or flickers	Data is exchanged via the network.

15.6.7.2 Information on the network

Parameter

Address	Name / setting range / [default setting]	Information
0x23A2:001	Active EtherNet/IP settings: IP address • Read only	Display of the active IP address.
0x23A2:002	Active EtherNet/IP settings: Subnet • Read only	Display of the active subnet mask.
0x23A2:003	Active EtherNet/IP settings: Gateway • Read only	Display of the active gateway address.
0x23A2:005	Active EtherNet/IP settings: MAC address • Read only	Display of the active MAC address.
0x23A2:006	Active EtherNet/IP settings: Multicast address • Read only	Display of the active Multicast IP address.

Address	Name / setting range / [default setting]		Information
0x23A5:001	Active port settings: Port 1 (X266) • Read only		
	0	Not connected	
	1	10 Mbps/Half Duplex	
	2	10 Mbps/Full Duplex	
	3	100 Mbps/Half Duplex	
	4	100 Mbps/Full Duplex	
0x23A5:002	Active port settings: Port 2 (X267) • Read only		
	0	Not connected	
	1	10 Mbps/Half Duplex	
	2	10 Mbps/Full Duplex	
	3	100 Mbps/Half Duplex	
	4	100 Mbps/Full Duplex	
0x23A7	Address conflict detection		Activate address conflict detection (ACD) (enable). • If this value is changed, the device must be reset ("Power off/on" or "Type 0 Reset").
	0	Disabled	
	1	**Enabled**	
0x23A8	CIP module status • Read only		Display of the active CIP module status.
	0	Nonexistent	
	1	Device self testing	
	2	Standby	
	3	Operational	
	4	Major recoverable fault	
	5	Major unrecoverable fault	
0x23A9	EtherNet/IP status • Read only		Display of the active network status.
	0	No IP address	
	1	No connections	
	2	Connected	
	3	Connection timeout	
	4	Duplicate IP	
	5	Device self testing	

15.7 PROFINET

PROFINET® (Process Field Network) is a real-time capable network based on Ethernet.

- PROFINET® is a registered trademark and patented technology licensed by the PROFIBUS & PROFINET International (PI) user organization.
- Detailed information on PROFINET can be found on the web page of the user organization: http://www.profibus.com
- PROFINET transmits, between the IO-Devices and a IO-Controller (PLC), parameter data, configuration data, diagnostic data, alarm messages, and process data.
- The data is transmitted as a function of its time-critical behavior via corresponding communication channels.
- The device is implemented as a PROFINET IO-Device in a PROFINET RT network.
- The PROFINET connections are realized as standard RJ45 sockets.
- Information about the dimensioning of a PROFINET network can be found in the configuration document.

Preconditions

- The inverter is equipped with the "PROFINET" network module.

  Connection via RJ45 sockets X256 and X257 with commercially available standard Ethernet cable from CAT 5/5e.
- Selection of the technology application in the inverter with parameter ▸ 0x4000 > 1.

More information about connections can be found on the Internet:

www.profibus.org → PROFINET Cabling and Interconnection Technology

Device description files for Lenze products can be found on the Internet:
www.Lenze.com → Downloads → Product-related Application Knowledge Base articles

Typical topologies

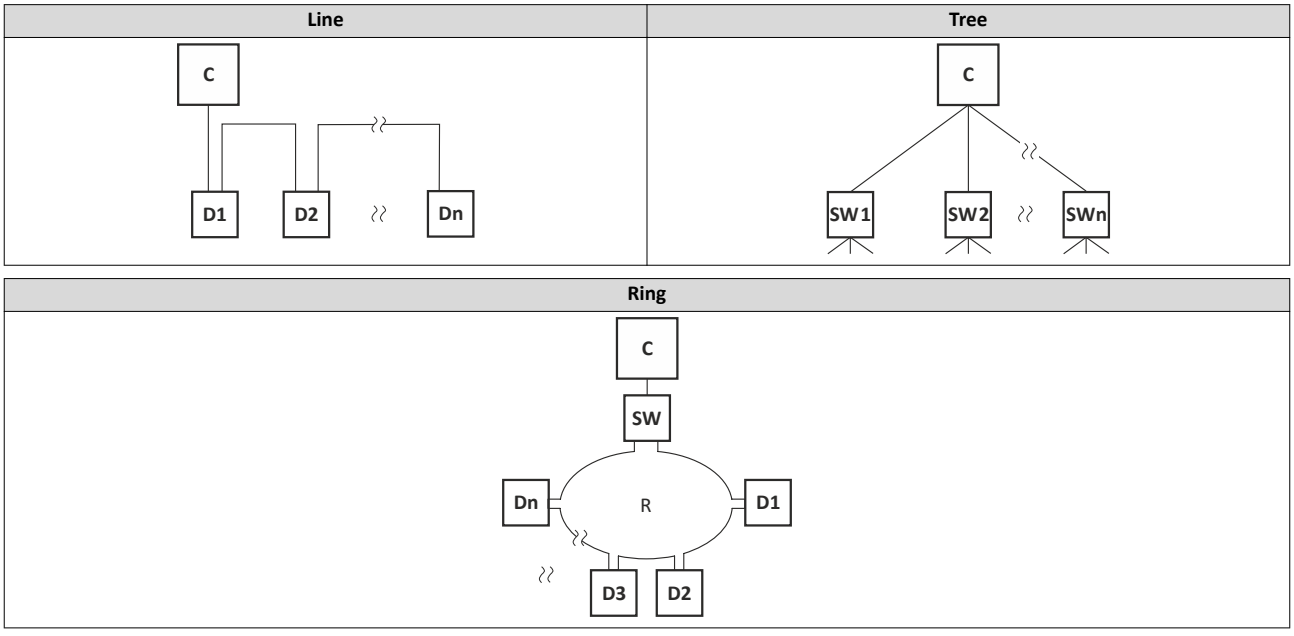

C	IO controller	SW	Switch SCALANCE (MRP capable)
D	IO device	R	Redundant domain

Technical data

Range	Values
Communication profile	PROFINET
Communication medium/cable type	S/FTP (Screened Foiled Twisted Pair, ISO/IEC 11801 or EN 50173), CAT5e Standard Ethernet (acc. to IEEE 802.3), 100Base-TX (Fast Ethernet)
Network topology	Line, star, and tree
Type within the network	PROFINET I/O-Device (slave)
Max. cable length	100 m between two devices
I/O data (PDO data)	• Max. 244 PDOs: freely configurable, regardless of their direction (In, Out, In/Out) • Max. 1024 input bytes and max. 1024 output bytes • Scaling: bytes: 1, 2, 4, 8, 16, 32, 64, 128, 192, 256, 320, 384, 448, 512, 1024 Word: 1, 2, 4, 8, 16, 32, 64, 128, 192, 256, 320, 384, 448, 512 • The combination of I/O data in one slot is possible.
Communication type	PROFINET I/O cyclic
Functions	• Transmission of cyclic process data • Context Management via CL-RPC (Connectionless Remote Procedure Call) The Context Management Protocol is used for establishing and terminating connections, requesting resources, exchanging configuration and diagnostic information, uploading/downloading records. • Setpoint/actual comparison of the PROFINET configuration
Special features in the Lenze automation system	Configuration in the »PLC Designer«: • No submodules • Only one device instance is supported. **No** support of • acyclic write and read requests • DCP (Discovery and basic Configuration Protocol) • RTP (Real-Time Transport Protocol) over UDP (User Datagram Protocol) • Multicast communication • Process/diagnostic alarms • Generic diagnostics, channel diagnostics
Minimum cycle time	2 ms

15.7.1 Commissioning

In the following chapters, the steps required for controlling the inverter with a IO-Controller via PROFINET are described.

Preconditions

- As an IO-Device, the inverter is connected to an IO-Controller and further PROFINET nodes if required.

  See "Typical topologies" under: ▸ PROFINET 📖 431
- The entire wiring has been checked for completeness, short circuit and earth fault.
- All PROFINET devices are supplied with voltage and are switched on.
- The functional test described in the mounting and switch-on instructions has been completed successfully (without any errors or faults).
- The inverter is commissioned with the »EASY Starter«.
  - Download »EASY Starter«
- The IO-Controller is commissioned with a different engineering tool, e. g. Siemens »TIA Portal«.

  For this purpose, install the required GSDML device description file in the engineering tool for the IO-Controller for configuring the inverter.

  We always recommend the use of the current device description.
  - Download of GSDML files
  - Please observe the necessary system requirements and the notes regarding the inverter.

  ▸ Device description file 📖 435

15.7.1.1 Settings in the »EASY Starter«

1. Set the IP address and the station name ("PROFINET device name").

   See: ▸ Station name and IP configuration 📖 436
2. Save the parameters in the inverter with mains failure protection. ▸ 0x2022:003

   See: ▸ Saving the parameter settings 📖 39
3. Restart the PROFINET communication. ▸ 0x2380

   See: ▸ Restarting or stopping the communication 📖 434

15.7.1.2 Restarting or stopping the communication

The communication needs to be restarted after changes to the interface configuration (e. g. station address and IP configuration) so the changed settings become effective without switching the line voltage.

▸ Station name and IP configuration 📖 436

There are two options for restarting the communication:
- Set 0x2380 to 1 (restart with current values)
- Set 0x2380 to 2 (restart with the values saved last)

The following option can be used to stop communication:
- Set 0x2380 to 5 (stop network communication)

Parameter

Address	Name / setting range / [default setting]		Information
0x2380	PROFINET communication		Restart / stop communication • When the device command has been executed successfully, the value 0 is shown.
	0	**No action/no error**	Only status feedback
	1	Restart with current values	Restart communication with the current values.
	2	Restart with stored values	Restart communication with the values of the PROFINET parameters that have been saved last (0x2381:001 ... 0x2381:009).
	5	Stop network communication	Stop communication
	10	In progress	Only status feedback
	11	Action cancelled	
	12	Fault	

15.7.1.3 Settings in the Siemens »TIA Portal«

Here, commissioning with the Siemens »TIA Portal« is described. Please note that in the standard setting of the Siemens »TIA Portal« changes of network parameters carried out by a Lenze engineering tool (e. g. »EASY Starter«) may be overwritten.

1. Go to the device configuration and open the "net view" to drag the inverter from the catalog to the net view of the PROFINET.
2. Assign the inverter to the associated IO-Controller.
3. Mark the inverter and change to the "device view".
4. Set the IP address and the station name ("PROFINET device name") in "Properties".

   See: ▸ Station name and IP configuration

In order that the inverter can be identified via Ethernet when the IO controller is switched off, the station name and the IP configuration must be saved in the inverter with mains failure protection via the separate entry with the »EASY Starter«. 0x2022:003

See: ▸ Saving the parameter settings 📖 39

5. Below the device name and the name of the device description file, the device view shows the pre-assignment of output and input process data words.

   In slot 1, pre-assigned process data words can be changed.

   When using PROFIsafe, you can add safety process data in slot 2.

   ▸ PROFIsafe 📖 442
6. Save the project in the engineering tool.
7. Load the configuration into the IO-Controller.
8. Set the IO-Controller to "RUN".

15.7.1.4 Device description file

The device description file must be installed in the engineering tool for configuring the network (e. g. Siemens »TIA Portal«).

- Download of GSDML files

The name of the device description file is as follows:

"GSDML-V<x>.<zz>-Lenze-I<NNN>PN<Version>-<yyyy><mm><dd>.xml".

Wildcard	Info
x	Major version of the used GSDML scheme
zz	One-digit or two-digit minor version of the used GSDML scheme
NNN	Specifying the inverter name, e. g. i<550>, i<950>, ...
Version	First software version that can be used with this GSDML.
yyyy	Year of publication
mm	Month of publication
dd	Day of publication

Define the user data length

The configuration of 1 ... 16 process data double words (4 ... 64 bytes) and 8 safety data words is supported.

Examples of selecting the device description file:

- "IEC 8 DWords I/O": 8 process data double words only in slot 1 of the PROFINET telegram)
- "Safety module 4 DWords": 4 safety double words (only in slot 2 of the PROFINET telegram when the extended safety engineering is used simultaneously)

15.7.1.5 Establishing a connection to the »EASY Starter« via PROFINET

To establish a communication link to the inverter via PROFINET ports X2x6/X2x7, proceed as follows:

Requirements:

- The network interface of the engineering PC provided for the connection is parameterised for the PROFINET IP subnetwork.
- A valid IP configuration is set in the inverter. ▸ Station name and IP configuration 📖 436

Tools required:

- Engineering PC with installed »EASY Starter«.
- Standard Ethernet cable from CAT 5/5e

1. Plug the network cable into one of the two PROFINET ports **X2x6 / X2x7** of the inverter.
2. Use the network cable to connect the inverter to the PC on which »EASY Starter« is installed.
3. Start the »EASY Starter«.

   The "Add devices" dialog is shown.
4. Select the "PROFINET " connection.
5. Enter the PROFINET IP address of the inverter.
6. Press the **Insert** button.

Once a connection has been successfully established, the inverter is displayed in the device list. The tabs in »EASY Starter« then provide access to the inverter parameters.

15.7.2 Basic setting and options

15.7.2.1 Station name and IP configuration

The station name and the IP configuration can be assigned by the IO-Controller. These settings enable the IO-Controllerto identify the devices in the network and manage the data exchange.

The station name and the IP configuration can also be assigned by the »Engineering Tool«.

- The station name of the IO device must be entered with permissible characters according to the PROFINET specification. ▶ 0x2381:004
- Display of the currently used station name: ▶ 0x2382:004
- The IP configuration comprises the assignments of:
  - IP address ▶ 0x2381:001
  - Subnet mask ▶ 0x2381:002
  - Gateway address ▶ 0x2381:003
- Display of the actual IP configuration: ▶ 0x2382:001 ... 0x2382:003

Save the station name and the IP configuration in the IO Device with line voltage failure protection so the IO Device can be identified via PROFINET if the IO controller is switched off. 0x2022:003

▶ Saving the parameter settings 📖 39

An invalid station name or the assignment of invalid combinations of the IP address, subnet mask, and gateway address can have the consequence that no connection to PROFINET can be established.

In case of impermissible settings, the red LED "bus ERR" is blinking and the error message "PROFINET: Stack initialization error [0x8192]" is output.

▶ LED status display 📖 440

Parameter

Address	Name / setting range / [default setting]	Information
0x2381:001	PROFINET settings: IP address 0.0.0.0 ... [**0.0.0.0**] ... 255.255.255.255	Set IP address • A changed value will only be effective after the PROFINET communication is restarted (0x2380 = 1).
0x2381:002	PROFINET settings: Subnet 0.0.0.0 ... [**0.0.0.0**] ... 255.255.255.255	Set subnet mask • A changed value will only be effective after the PROFINET communication is restarted (0x2380 = 1).
0x2381:003	PROFINET settings: Gateway 0.0.0.0 ... [**0.0.0.0**] ... 255.255.255.255	Set gateway address • A changed value will only be effective after the PROFINET communication is restarted (0x2380 = 1). • The gateway address is valid if the network address of the IP address is identical to the gateway address. In this case, no gateway functionality is used. • DHCP is not supported.
0x2381:004	PROFINET settings: Station name	Set station name • A changed value will only be effective after the PROFINET communication is restarted (0x2380 = 1).
0x2381:005	PROFINET settings: I&M1 System designation	Input/output of the I&M1 system designation • The default setting is an empty string.
0x2381:006	PROFINET settings: I&M1 Installation site	Input/output of the I&M1 location identification code • The default setting is an empty string.
0x2381:007	PROFINET settings: I&M2 Installation date	Input/output of the I&M2 date of installation • The default setting is an empty string.
0x2381:008	PROFINET settings: I&M3 additional information	Input/output of the I&M3 additional information • The default setting is an empty string.
0x2381:009	PROFINET settings: I&M4 signature code ["**000000000000000000000000000000000000000000** **0000000000000000000000000000000000000000000** **00000000000000000000000**"]	Input/output of the I&M4 signature • The default setting is an empty string.

15.7.2.2 Suppress diagnostic messages to the IO controller

▸ 0x285A:001 serves to set which error response in the device suppresses the alarm message to the IO-Controller.

Parameter

Address	Name / setting range / [default setting]		Information
0x285A:001	Diagnostic configuration: Alarm suppression 0x0000 ... [**0x0000**] ... 0xFFFF		Bit coded selection of error responses which suppress the alarm message to the IO controller. • Bit x = 1 = suppress alarm message. • In the default setting "0", an alarm message is displayed for all error responses.
	Bit 1	Warning	
	Bit 2	Warning locked	
	Bit 3	Trouble	
	Bit 4	Fault > application quick stop > quick stop	
	Bit 5	Fault > inverter quick stop > quick stop	
	Bit 6	Fault > inverter quick stop > inverter disabled	
	Bit 7	Fault > inverter disabled	
	Bit 8	Fault > CiA402	

15.7.3 Process data transfer

Process data serve to control the device.

- The process data is transmitted cyclically between the IO-Controller and the IO-Devices participating in PROFINET.
- The process data can be directly accessed by the IO controller. In the PLC, for instance, the data is stored directly in the IO area.
- The length of the process data is 1 ... 256 bytes (max. 64 slots) per direction.
- The process data is transmitted 1 : 1 according to its sequence.

15.7.4 Parameter data transfer

Data communication with PROFINET is characterised by the simultaneous operation of cyclic and acyclic services in the network. As an optional extension, the parameter data transfer belongs to the acyclic services, which provides access to all device parameters.

Details

- The access to the device data depends on the PROFIdrive profile.
- Only one parameter request is processed at a time (no pipelining).
- No spontaneous messages are transferred.
- There are only acyclic parameter requests.

Basically, a IO-Controller can always be used to request parameters from IO-Device if the IO-Device is in the DATA_EXCHANGE state.

Transmission directions for acyclic data transfer

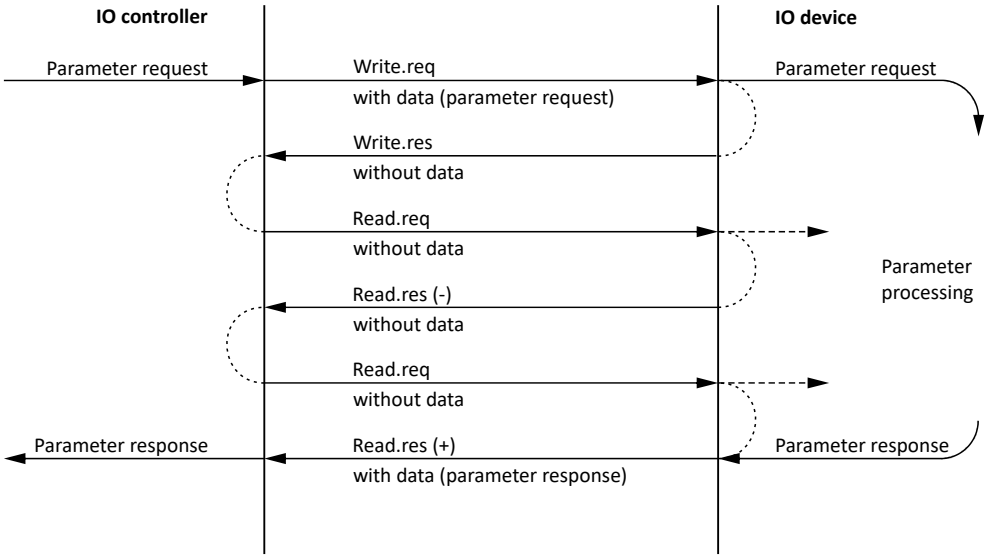

1. A "Write.req" is used to transmit the data set (DB47) as parameter request to the IO-Device.
2. "Write.res" is used to confirm the input of the message for IO-Controller.
3. With Read.req, the IO-Controller requests the response of the IO-Device
4. The IO-Device responds with a "Read.res (-)" if processing has not been completed yet.
5. After parameter processing, the parameter request is completed by transmitting the parameter response to the IO-Controller by "Read.res (+)".

Frame structure

Destr	ScrAddr	VLAN	Type 0x0800	RPC	NDR	Read/Write Block	Data	FCS
6 bytes	6 bytes	4 bytes	4 bytes	80 bytes	64 bytes	64 bytes	0 .... 240 bytes	4 bytes

In the "Read / Write Block field", the initiator specifies the access to the "DB47" data set. The data that is written on this index or read by it, contain a header and the parameter request or the parameter response. The read data or the data to be written are contained in the "Data" field.

Assignment of the user data depending on the data type

Depending on the data type used, the user data is assigned as follows:

Data type	Length	User data assignment				
		Byte 1	Byte 2	Byte 3	Byte 4	Byte ...
String	x bytes	*Data* (x bytes)				
U8	1 byte	*Data*	0x00			
U16	2 bytes	HIGH byte	LOW byte			
		Data	*Data*			
U32	4 bytes	HIGH word		LOW word		
		HIGH byte	LOW byte	HIGH byte	LOW byte	
		Data	*Data*	*Data*	*Data*	

15.7.5 Monitoring

The parameters for setting network monitoring functions are described below.

Parameter

Address	Name / setting range / [default setting]		Information
0x2859:002	Network monitoring: Data exchange exited		Selection of the response to exiting the "Data Exchange" state. Associated event ID: • 822313361 | 0x31038191 - Network - Disruption of cyclic data exchange
	0	**No response**	▸ Severity 574
	1	Fault > CiA402	
	2	Warning	

15.7.6 Diagnostics

15.7.6.1 LED status display

Notes on the connection status with IO-Controller can be obtained via the LEDs "BUS RDY" and "BUS ERR" of the PROFINET option (front of the device).

In addition, the LEDs "L/A" at the RJ45 sockets indicate the connection status to the network.

"BUS RDY" LED (green)	State	Meaning
Off	Not connected	No connection to the IO-Controller
Blinking	Connected	IO-Controller in STOP
On	Data exchange	IO-Controller in RUN (DATA_EXCHANGE)

"BUS ERR" LED (red)	State	Meaning
Off	No fault	No fault
Blinking fast	IO-Device identifies (localises)	The PROFINET function "node flashing test" is triggered by IO-Controller. The flickering LED serves to identify (locate) an accessible IO-Device.
Blinking	Impermissible settings	Impermissible settings: Stack, station name or IP parameters are invalid.
On (red)	Fault	Communication error (e. g. Ethernet cable removed)

"L/A" LED (green)	State	Meaning
off	Not connected	Network not available
on	Connected	Network available No data transfer
blinking	Traffic	Data transfer

15.7.6.2 Information on the network

The following parameters show information on the network.

Parameter

Address	Name / setting range / [default setting]	Information
0x2382:001	Active PROFINET settings: IP address • Read only	Display of the active IP address.
0x2382:002	Active PROFINET settings: Subnet • Read only	Display of the active subnet mask.
0x2382:003	Active PROFINET settings: Gateway • Read only	Display of the gateway address.
0x2382:004	Active PROFINET settings: Station name • Read only	Display of the active station name.
0x2382:005	Active PROFINET settings: MAC Address • Read only	Display of the active MAC address.

Address	Name / setting range / [default setting]		Information
0x2388	PROFINET status • Read only		Bit coded display of the current Bus status.
	Bit 0	Initialized	The network component is initialised.
	Bit 1	Online	After initialisation, the network component waits for a communication partner and the system power-up.
	Bit 2	Connected	The network component has established a cyclic I/O communication relationship to a communication partner.
	Bit 3	IP address error	The IP address is invalid. Valid IP addresses are defined according to RFC 3330.
	Bit 4	Hardware fault	
	Bit 6	Watchdog elapsed	PROFINET communication is continuously interrupted in the "Data_Exchange" state, e.g. by cable break or failure of the IO Controller. • PROFINET communication changes to the "No_Data_Exchange" state. When the watchdog monitoring time specified by the IO Controller has elapsed, the response set in is triggered in the inverter.
	Bit 7	Protocol error	
	Bit 8	PROFINET stack ok	
	Bit 9	PROFINET stack not configured	
	Bit 10	Ethernet controller fault	
	Bit 11	UDP stack fault	
0x2389:001	PROFINET error: Error 1 • Read only		The parameter currently contains the error detected on the network. • The error values may occur in combination with the error values from parameter 0x2389:002.
	0	No error	
	1	Reserved	
	2	Unit ID unknown	
	3	Max. units exceeded	
	4	Invalid size	
	5	Unit type unknown	
	6	Runtime plug error	
	7	Invalid argument	
	8	Service pending	
	9	Stack not ready	
	10	Command unknown	
	11	Invalid address descriptor	
0x2389:002	PROFINET error: Error 2 • Read only		The parameter currently contains the error detected on the network. • The error values may occur in combination with the error values from parameter 0x2389:001.
	Bit 7	IP address error	The IP address is invalid. Valid IP addresses are defined according to RFC 3330.
	Bit 8	Station name problem	The station name must be assigned according to the PROFINET specification.
	Bit 9	DataExch left	PROFINET communication is continuously interrupted in the "Data_Exchange" state, e. g. by cable break. • PROFINET communication changes to the "No_Data_Exchange" state. • When the watchdog monitoring time specified by the IO Controller has elapsed, the response set in is triggered in the device.
	Bit 10	Stack boot error	
	Bit 11	Stack online error	
	Bit 12	Stack state error	
	Bit 13	Stack revision error	
	Bit 14	Initialization problem	The stack cannot be initiated with the user specifications. A reason might be, e. g., a station name that does not correspond to the PROFINET specification.
	Bit 15	Stack init error	

15.7.7 PROFIsafe

PROFIsafe via PROFINET enables the transfer of safe information via the PROFIsafe protocol according to the specification "PROFIsafe - Profile for Safety Technology", version 2.0.

- The PROFIsafe data is transmitted in the second slot of a PROFINET telegram.
- In the PROFIsafe data, one bit each is used to control a certain safety function.
- The structure of the PROFIsafe data is described in the PROFIsafe profile.
- The length of the PROFIsafe data (also "PROFIsafe message") is fixed at 16 bytes.
- The inverter forwards the PROFIsafe messages to the safety module (Extended Safety) for a safe evaluation.

15.7.8 PROFIenergy

The device profile PROFIenergy enables an energy management for systems. With the support of the "PROFIenergy Class 3", the energy saving function of the inverter can be triggered and certain energy consumption values can be measured via standardised commands.

Parameter

Address	Name / setting range / [default setting]	Information
0x2590:003	Energy saving: State of actual energy saving mode • Read only	
	Bit 0 StateReadyToOperate	
	Bit 4 StatePause	
	Bit 6 StateOperate	

15.7.8.1 Supported commands

The following PROFIenergy commands are supported:

Command	Description
Start_Pause	Starts the energy saving function.
End_Pause	Stops the energy saving function.
Query_Mode	Requests the list of all supported energy modes.
Get_Mode	Requests the data of an energy mode.
PEM_Status	Requests the current status.
PEM_Status_with_CTTO	Requests the current status of dynamic values.
PE_Identify	Requests basic information on the modes.
Query_Version	Requests the versioning of the query.
Get_Measurement_List	Requests the list of the supported measured values.
Get_Measurement_List_with_object_number	Requests the list of supported measured values indicating the corresponding parameters.
Get_Measurement_Values	Requests the values of the measured values.
Get_Measurement_Values_with_object_number	Requests the values of the measured values indicating the corresponding parameters.
PE_Mode_ID	Manufacturer-specific energy saving mode The energy saving mode is only active if the power section is inhibited. (0x2590:003, bit 0 = 1)

15.7.8.2 Supported measured values

The standardised measured values are supported:

ID	Measured value	Description
34	Active power in W	Active power Corresponds to the current value from parameter 0x2DA2:001.
205	Active energy sum in kWh	Energy sum Corresponds to the current value from parameter 0x2DA3:003. The value can be reset by writing "0".

Parameter

Address	Name / setting range / [default setting]	Information
0x2DA2:001	Output power: Effective power • Read only: x.xxx kW	Display of the active output power for an energy analysis in the respective application.
0x2DA3:003	Output energy: Overall energy -21474836.47 ... [**0.00**] ... 21474836.47 kWh	Display of the energy balance: • Positive values: Energy consumed • Negative values: Generated energy 0x2DA3:003 = 0 resets the energy balance. When replacing a device, the value of the old device can be adopted as the starting value for the new device.

15.8 Monitoring

Parameter

Address	Name / setting range / [default setting]		Information
0x2859:001	Network monitoring: Watchdog elapsed		Selection of the response to a permanent interruption of the communication to the IO controller. Associated event ID: • 822313360 | 0x31038190 - Network - Watchdog time-out
	0	No response	▸ Severity 574
	1	Fault > CiA402	
	2	**Warning**	
0x2859:003	Network monitoring: Invalid configuration		Selection of the response triggered by the reception of invalid configuration data. Associated event ID: • 822313607 | 0x31038287 - Network - Invalid configuration
	0	No response	▸ Severity 574
	1	Fault > CiA402	
	2	**Warning**	
0x2859:004	Network monitoring: Initialisation error		Selection of the response triggered by the occurrence of an error during the initialization of the network component. Associated event ID: • 822313362 | 0x31038192 - Network - Initialization error
	0	No response	▸ Severity 574
	1	Fault > CiA402	
	2	**Warning**	
0x2859:005	Network monitoring: Invalid process data		Selection of the response triggered by the reception of invalid process data. Process data marked as invalid (IOPS is "BAD") are received by the IO Controller. Typically in case of • a PLC in STOP state, • alarms, • acyclic demand data. Associated event ID: • 822313363 | 0x31038193 - Network - Invalid cyclic process data
	0	No response	▸ Severity 574
	1	Fault > CiA402	
	2	**Warning**	
0x2859:006	Network monitoring: Time-out explicit message		Selection of the response to timeouts during transfer of Explicit Messages.
	0	No response	▸ Severity 574
	1	Fault > CiA402	
	2	**Warning**	

16 Device functions

16.1 Optical device identification

For applications including several interconnected inverters it may be difficult to locate a device that has been connected online. The "Optical device identification" function serves to locate the inverter by means of blinking LEDs.

Details

In order to start the visual tracking,

- click the button in the toolbar of the »EASY Starter« or
- set 0x2021:001 = "Start [1]".

After the start, both LEDs "RDY" and "ERR" on the front of the inverter synchronously blink very fast.

"RDY" LED (blue)	"ERR" LED (red)	Status/meaning
Both LEDs are blinking in a very rapidly synchronous mode		"Visual tracking" function is active.

The blinking duration can be set in 0x2021:002 or selected in the »EASY Starter« in the dropdown list field:

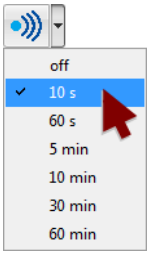

Parameter

Address	Name / setting range / [default setting]	Information
0x2021:001	Optical tracking: Start detection **0** **Stop** 1 Start	1 = start optical device identification. • After the start, the two LEDs "RDY" and "ERR" on the front of the inverter are blinking with a blinking frequency of 20 Hz for the blinking duration set in 0x2021:002. The setting is then automatically reset to "0" again. • If the function is reactivated within the blinking time set, the time is extended correspondingly. • A manual reset to "0" makes it possible to stop the function prematurely.
0x2021:002	Optical tracking: Blinking duration 0 ... [**5**] ... 6000 s	Setting of the blinking duration for the visual tracking.

16.2 Reset parameters to default

Parameter

Address	Name / setting range / [default setting]		Information
0x2022:001	Device commands: Load default settings • Setting can only be changed if the inverter is disabled.		1 = reset all parameters in the RAM memory of the inverter to the default setting that is stored in the inverter firmware. • All parameter changes made by the user are lost during this process! • It may take some seconds to execute the task. When the task has been executed successfully, the value 0 is shown. • Loading parameters has a direct effect on the cyclic communication: The data exchange for control is interrupted and a communication error is generated.
	0	**Off / ready**	Only status feedback
	1	On / start	Execute device command
	2	In progress	Only status feedback
	3	Action cancelled	
	4	No access	
	5	No access (Device disabled)	
0x2022:039	Device commands: Load TA default settings • Setting can only be changed if the inverter is disabled.		
	0	**Off / ready**	Only status feedback
	1	On / start	Execute device command
	2	In progress	Only status feedback
	3	Action cancelled	
	4	No access	
	5	No access (Device disabled)	

16.3 Saving/loading the parameter settings

If parameter settings of the inverter are changed, these changes at first are only made in the RAM memory of the inverter. In order to save the parameter settings with mains failure protection, the inverter is provided with the corresponding device command in the parameter.0x2022:003

Parameter

Address	Name / setting range / [default setting]		Information
0x2022:003	Device commands: Save user data		1 = save current parameter settings in the user memory of the memory module with mains failure protection. • This process may take some seconds. When the device command has been executed successfully, the value 0 is shown. • Do not switch off the supply voltage during the saving process and do not unplug the memory module from the device! • When the device is switched on, all parameters are automatically loaded from the user memory of the memory module to the RAM memory of the device.
	0	**Off / ready**	Only status feedback
	1	On / start	Execute device command
	2	In progress	Only status feedback
	3	Action cancelled	
	4	No access	
	5	No access (Device disabled)	
	101	No SD card connected	
	102	SD card is write protected	
	103	SD card is full	
0x2022:040	Device commands: Parameter-Backup • Setting can only be changed if the inverter is disabled.		• When the device command has been executed successfully, the value 0 is shown. • While the device command is being executed, do not switch off the supply voltage and do not remove the memory module! ⚠ CAUTION! • In parallel, the file "\firmware\update_data.tar" is stored on the SD card. • When booting, the firmware level of the device is compared with the firmware level of the file. • If the firmware versions are different, the device is automatically updated to the firmware version of the file!
	0	**Off / ready**	Only status feedback
	1	On / start	Execute device command
	2	In progress	Only status feedback
	3	Action cancelled	
	4	No access	
	5	No access (Device disabled)	
	20	20%	
	40	40%	
	60	60%	
	80	80%	
	100	100%	
	101	No SD card connected	
	102	SD card is write protected	
	103	SD card is full	

Address	Name / setting range / [default setting]		Information
0x2022:043	Device commands: Restore • Setting can only be changed if the inverter is disabled.		• When the device command has been executed successfully, the value 0 is shown. • While the device command is being executed, do not switch off the supply voltage and do not remove the memory module!
	0	**Off / ready**	Only status feedback
	1	On / start	Execute device command
	2	In progress	Only status feedback
	3	Action cancelled	
	4	No access	
	5	No access (Device disabled)	
	20	20%	
	40	40%	
	60	60%	
	80	80%	
	100	100%	
	101	No SD card connected	

16.4 Enabling the device

Parameter

Address	Name / setting range / [default setting]		Information
0x2822:001	Axis commands: Enable inverter		Parameters for interaction with engineering tools.
	0	Inverter inhibited	
	1	**Inverter enabled**	

16.5 Restart device

If the inverter communicates with the master as network node via EtherCAT: executing the device command may cause an interruption of the EtherCAT communication with the master and a standstill of the drive.

Parameter

Address	Name / setting range / [default setting]		Information
0x2022:035	Device commands: Restart Device		Parameter for interaction with engineering tools. • When the device command has been executed successfully, the value 0 is shown. • While the device command is being executed, do not switch off the supply voltage and do not remove the memory module!
	0	**Off / ready**	Only status feedback
	1	On / start	Execute device command
	2	In progress	Only status feedback
	3	Action cancelled	
	4	No access	
	5	No access (Device disabled)	

16.6 Start/stop application

Parameter

Address	Name / setting range / [default setting]		Information
0x2022:044	Device commands: Start application • Setting can only be changed if the inverter is disabled.		• When the device command has been executed successfully, the value 0 is shown. • While the device command is being executed, do not switch off the supply voltage and do not remove the memory module!
	0	**Off / ready**	Only status feedback
	1	On / start	Execute device command
	2	In progress	Only status feedback
	3	Action cancelled	
	4	No access	
	5	No access (Device disabled)	
0x2022:045	Device commands: Stop application • Setting can only be changed if the inverter is disabled.		• When the device command has been executed successfully, the value 0 is shown. • While the device command is being executed, do not switch off the supply voltage and do not remove the memory module!
	0	**Off / ready**	Only status feedback
	1	On / start	Execute device command
	2	In progress	Only status feedback
	3	Action cancelled	
	4	No access	
	5	No access (Device disabled)	

16.7 Restarting Extended Safety

Parameter

Address	Name / setting range / [default setting]		Information
0x2022:041	Device commands: Restart extended safety		• When the device command has been executed successfully, the value 0 is shown. • While the device command is being executed, do not switch off the supply voltage and do not remove the memory module!
	0	**Off / ready**	Only status feedback
	1	On / start	Execute device command
	2	In progress	Only status feedback
	3	Action cancelled	
	4	No access	
	5	No access (Device disabled)	

16.8 Export logbook

The export of the complete logbook can be started with the 0x2022:036 parameter.

Parameter

Address	Name / setting range / [default setting]		Information
0x2022:036	Device commands: Export Logbook		• When the device command has been executed successfully, the value 0 is shown. • While the device command is being executed, do not switch off the supply voltage and do not remove the memory module! Exports the logbook for the upload into the engineering tools.
	0	**Off / ready**	Only status feedback
	1	On / start	Execute device command
	2	In progress	Only status feedback
	3	Action cancelled	
	4	No access	
	5	No access (Device disabled)	

16.9 Delete logbook files

The logbook files can be deleted with the 0x2022:015 parameter.

Parameter

Address	Name / setting range / [default setting]		Information
0x2022:037	Device commands: Delete Logfiles		• When the device command has been executed successfully, the value 0 is shown. • While the device command is being executed, do not switch off the supply voltage and do not remove the memory module! Deletion of log files on the device that were exported in an earlier step via 0x2022:036 (Export Logbook).
	0	**Off / ready**	Only status feedback
	1	On / start	Execute device command
	2	In progress	Only status feedback
	3	Action cancelled	
	4	No access	
	5	No access (Device disabled)	

16.10 Activate loaded application

The loaded application can be activated with the 0x2022:038 parameter.

Parameter

Address	Name / setting range / [default setting]		Information
0x2022:038	Device commands: Activate loaded application		Start of the application that is provided/downloaded by the »Application Loader«. Activates the loaded application.
	0	**Off / ready**	Only status feedback
	1	On / start	Execute device command
	2	In progress	Only status feedback
	3	Action cancelled	
	4	No access	
	5	No access (Device disabled)	

16.11 Uploading the application

Parameter

Address	Name / setting range / [default setting]		Information
0x2022:042	Device commands: Upload application		
	0	**Off / ready**	Only status feedback
	1	On / start	Execute device command
	2	In progress	Only status feedback
	3	Action cancelled	
	4	No access	
	5	No access (Device disabled)	
	20	20%	
	40	40%	
	60	60%	
	80	80%	
	100	100%	
	101	No SD card connected	

16.12 Inverter control word

Parameter

Address	Name / setting range / [default setting]		Information
0x2830	Inverter control word 0x0000 ... [**0x0000**] ... 0xFFFF		The control word serves to influence the control functions.
	Bit 0	Flying restart completed	This bit enables the control to report the acceptance of the recorded speed to the "flying restart" function. Thus, the flying restart process is completed.
	Bit 1	Block flying restart	TRUE: the flying restart process is blocked.
	Bit 4	Set load value	TRUE: set load value.
	Bit 5	Select new actual position	TRUE: define new actual position. • Setting/shifting of Actual position (0x6064) to Actual position start value (0x2983) considering the set resolution (0x608F:001, 0x608F:002). • Mode for setting the actual position: 0x2984)
	Bit 6	Activate DC-injection braking or short-circuit braking	DC-injection braking or short-circuit braking is activated via this bit.
	Bit 7	Disable speed and position monitoring	
	Bit 8	Disable VFC-Eco	
	Bit 9	Brake status override	
	Bit 10	Activate SLS	
	Bit 11	Stop mains failure control	

16.13 Access protection

16.13.1 Write access protection

Optionally a write access protection can be installed for the inverter parameters.

Write access protection via network is not restricted. Irrespective of the write access protection that is currently set, a higher-level controller, OPC-UA server, or any other communication partner connected to the inverter is always provided with full read/write access to all parameters of the inverter.

After activating the write access protection, you have to enter a valid PIN to remove the write access protection. Note down the defined PIN(s) and keep this information in a safe place! If you lose the PIN(s), the inverter can only be disabled by resetting it to the delivery status. This means, all parameter settings made by the user get lost! ▸ Reset parameters to default 📖 446

Details

Usually the write access protection function is implemented by the engineer/OEM , for example to protect the inverter against incorrect parameterization by non-authorised persons. For diagnostic purposes, a read access to all parameters is always possible.

The write access protection allows for the following configurations:

- Full write access
- Write access only to favorites or (when knowing PIN1) to all parameters
- No write access or (when knowing PIN2) full write access
- No write access or (when knowing PIN1) write access only to favorites or (when knowing PIN2) to all parameters

The following table compares the four possible configurations:

PIN1 setting	PIN2 setting	Log-in	Status display after log-in	Active write access protection (via keypad/»EASY Starter«)
0x203D	0x203E	0x203F	0x2040	
0	0	-	0	No access protection configured.
		Access →		
		Diagnostics (read access)	Favorites	All parameters
> 0	0	0 or wrong PIN	2	Write access only possible to favorites.
		Correct PIN1	0	Write access to all parameters possible.
		Access →		PIN1
		Diagnostics (read access)	Favorites	All parameters
0	> 0	0 or wrong PIN	1	No write access.
		Correct PIN2	0	Write access to all parameters possible.
		Access →	PIN2	
		Diagnostics (read access)	Favorites	All parameters
> 0	> 0	0 or wrong PIN	1	No write access.
		Correct PIN1	2	Write access only possible to favorites.
		Correct PIN2	0	Write access to all parameters possible.
		Access →	PIN1	PIN2
		Diagnostics (read access)	Favorites	All parameters
		If PIN1 and PIN2 are set identically, a write access to all parameters is possible after the PIN has been entered correctly.		

Parameter

Address	Name / setting range / [default setting]	Information
0x203D	PIN1 access protection -1 ... [**0**] ... 9999	PIN definition for write access protection. • 1 … 9999 = set/change PIN. • 0 = delete PIN (deactivate access protection). • When the PIN has been set successfully, the value -1 is shown; otherwise 0. • Setting/changing the PIN via keypad/»EASY Starter« only possible if no write access protection is active. • Settings/changes via »EASY Starter« become effective immediately; via keypad they only become effective when the parameter group has been exited.
0x203E	PIN2 access protection -1 ... [**0**] ... 9999	
0x203F	PIN1/PIN2 log-in -32768 ... [**0**] ... 32767	Parameter for PIN entry for the purpose of deactivating an active access protection temporarily. • 1 … 9999 = log-in (deactivate access protection temporarily). • 0 = logout (reactivate access protection). • After having logged in successfully, the value -1 is shown; otherwise 0. • After 10 invalid entries, the log-in function is inhibited. In order to remove the log-in inhibit, the inverter must be switched off and on again.

16.13.1.1 Write access protection in the »EASY Starter«

If a write access protection is active for the online connected inverter, it is displayed in the status bar of the »EASY Starter«:

Display	Representation of the parameters in the »EASY Starter«
No write access	All parameters in all dialogs are displayed as read-only parameters.
Only favorites	Except for the favorites, all parameters in all dialogs are displayed as read-only parameters.

An active write access protection can be removed when the PIN is known.

How to remove an active write access protection temporarily:

1. Click the symbol in the toolbar.
   The "Log in / Log off" dialog box is displayed:

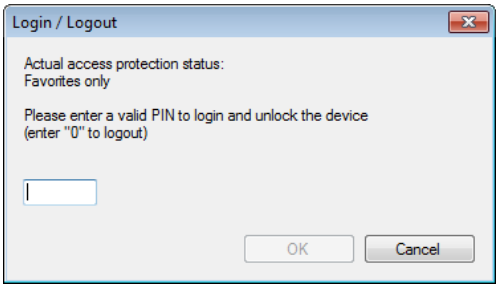

2. Enter the valid PIN and confirm with **OK**.

After 10 invalid entries, the log-in function is inhibited. In order to remove the log-in inhibit, the inverter must be switched off and on again.

The write access protection gets active again:

- Automatically 10 minutes after the last login or after the last active write access. It takes max. 10 minutes to be automatically logged out again after each write access.
- Automatically after the mains voltage is switched on again.
- Manually by entering a "0" in the dialog box "Log in / Log off" (see above).

Configuring the write access protection with »EASY Starter«

The write access protection is activated by specifying PIN1 and/or PIN2 (depending on the desired configuration of the write access protection).

How to activate the write access protection:

1. Go to the "Settings" tab and navigate to the "Access protection" parameterisation dialog:

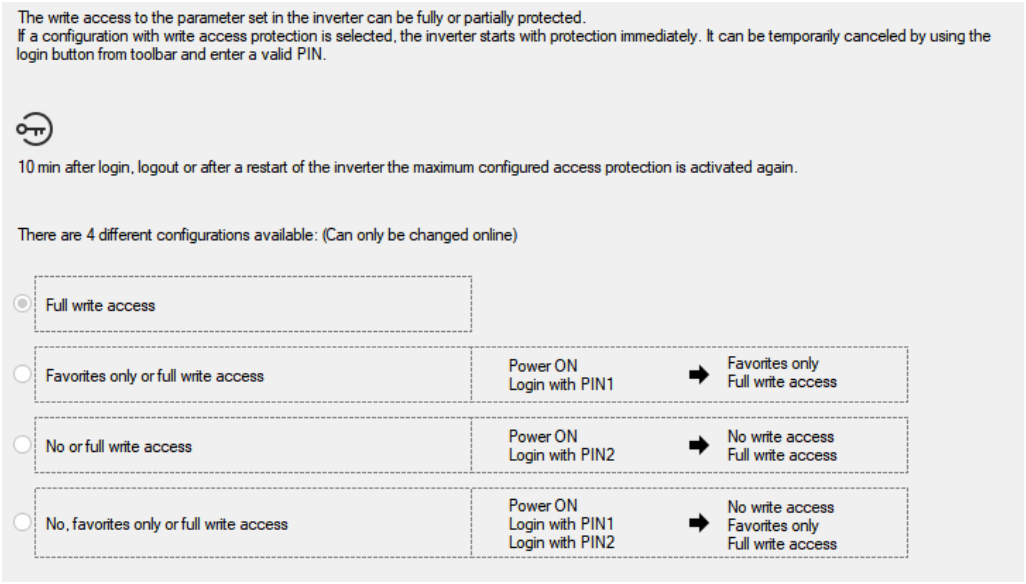

2. Select the desired configuration of the write access protection.
   The "PIN definition" dialog box is displayed. The possible entries depend on the selected configuration.

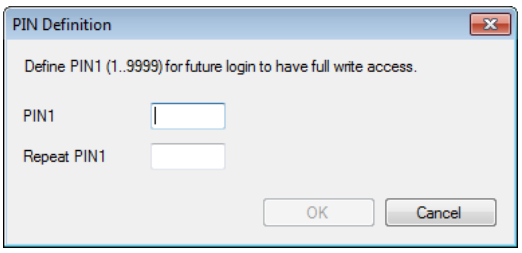

3. Enter the desired PIN(s) and confirm with **OK**.
   After successful execution, the write access protection is immediately effective and is displayed in the »EASY Starter« status bar.
4. For a permanent acceptance of the configuration: Save parameter settings in the device.

How to change already defined PIN(s):

1. Remove the active write access protection temporarily (see above).
2. Select the "Full write access" configuration in the "Access protection" parameterisation dialog.
3. Select again the desired configuration of the write access protection.
4. Enter new PIN(s) and confirm with **OK**.
5. Save parameter settings in the device.

How to remove a configured write access protection permanently:

1. Remove the active write access protection temporarily (see above).
2. Select the "Full write access" configuration in the "Access protection" parameterisation dialog.
3. Save parameter settings in the device.

Impact of the write access protection on »EASY Starter« functions

The following »EASY Starter« functions are not supported when write access protection is active:

- Parameter set download
- Definition of the "Favorites" parameters.
- Definition of the parameters for the "Parameter change-over" function

The following »EASY Starter« functions are supported irrespective of whether write access protection is active:

- Optical device identification 0x2021:001
- Enable/inhibit inverter 0x2822:001
- Resetting parameters to default 0x2022:001
- Save parameter set 0x2022:003
- Load user parameter
- Load OEM parameter
- Error reset

16.13.2 Brand protection

The function can only be used after consulting the manufacturer.

Parameter

Address	Name / setting range / [default setting]	Information
0x2100:001	Brand protection: PIN set -1 ... [**0**] ... 9999999	• 0: no brand protection. • 1 ... 9999999: possible pins. • -1: brand protection is active.
0x2100:002	Brand protection: PIN input -2 ... [**0**] ... 9999999	• 0: not checked. • 1 ... 9999999: possible pins. • -1: check was successful. • -2: check was not successful.
0x2100:003	Brand protection: Encryption 0 ... [**0**] ... 9	Encryption for brand protection.

16.14 Switching frequency changeover

The output voltage of the inverter is a DC voltage with sine-coded pulse width modulation (PWM). This corresponds by approximation to a AC voltage with variable frequency. The frequency of the PWM pulses is adjustable and is called "switching frequency".

Details

The switching frequency has an impact on the smooth running performance and the noise generation in the motor connected as well as on the power loss in the inverter. The lower the switching frequency, the better the concentricity factor, the smaller the power loss and the higher the noise generation.

Parameter

Address	Name / setting range / [default setting]		Information
0x2939	Switching frequency		Selection of the inverter switching frequency. Abbreviations used: • "Variable": Adaptation of the switching frequency as afunction of the current. The carrier frequency is reduced depending on the heat sink temperature and the ixt load. • "Fixed": The carrier frequency is fixed, no frequency reduction. • "Drive-optimised": reduces the capacitive currents from the motor to the earth. • "Min. Pv": reduces the capacitive currents from the motor to the earth and optimizes power dissipation.
	1	**4 kHz variable / drive-optimised**	
	2	8 kHz variable / drive-optimised	
	3	16 kHz variable / drive-optimised	
	5	2 kHz fixed / drive-optimised	
	6	4 kHz fixed / drive-optimised	
	7	8 kHz fixed / drive-optimised	
	8	16 kHz fixed / drive-optimised	

16.15 Device overload monitoring (ixt)

The inverter calculates the i*t utilisation in order to protect itself against thermal overload. In simple terms: a higher current or an overcurrent that continues for a longer time causes a higher i*t utilisation.

⚠DANGER!

Uncontrolled motor movements by pulse inhibit.

When the device overload monitoring function is activated, pulse inhibit is set and the motor has no torque. A load that is connected to motors without a holding brake may therefore cause uncontrolled movements! Without a load, the motor will coast.

Possible consequences: Death or severe injuries

► Only operate the inverter under permissible load conditions.

Details

The device overload monitoring function primarily offers protection to the power section. Indirectly, also other components such as filter chokes, circuit-board conductors, and terminals are protected against overheating. Short-time overload currents followed by recovery periods (times of smaller current utilisation) are permissible. The monitoring function during operation checks whether these conditions are met, taking into consideration that higher switching frequencies and lower stator frequencies as well as higher DC currents cause a greater device utilisation.

- If the total utilisation exceeds the total warning threshold set in 0x2D40:008 (default setting: 95 %), the inverter outputs a warning.
- If the device utilisation exceeds the permanent error threshold 100 %, the inverter is disabled immediately and generates an error message.
- The device overload can be obtained from the configuration document.

Parameter

Address	Name / setting range / [default setting]	Information
0x2D40:001	Device utilisation ixt: Power unit actual utilisation • Read only: x %	Display of the power module utilisation.
0x2D40:002	Device utilisation ixt: Power unit warning threshold 0 ... [**95**] ... 101 %	If the device utilisation exceeds the threshold set, the inverter outputs a warning.
0x2D40:003	Device utilisation ixt: Power unit error threshold • Read only: x %	If the power module utilisation exceeds the displayed threshold, the inverter outputs a warning.
0x2D40:004	Device utilisation ixt: Device actual utilisation • Read only: x %	Display of the current device utilisation.
0x2D40:005	Device utilisation ixt: Device warning threshold 0 ... [**95**] ... 101 %	
0x2D40:006	Device utilisation ixt: Device error threshold • Read only: x %	If the device utilisation exceeds the displayed threshold, the device outputs an error.
0x2D40:007	Device utilisation ixt: Actual total utilisation • Read only: x %	Display of the current total device utilisation.
0x2D40:008	Device utilisation ixt: Total utilisation warning threshold 0 ... [**95**] ... 101 %	If the total utilisation exceeds the set threshold, the device outputs a warning.
0x2D40:009	Device utilisation ixt: Total utilisation error threshold • Read only: x %	If the total utilisation exceeds the displayed threshold, the device outputs an error.

16.16 Heatsink temperature monitoring

In order to avoid an impermissible heating of the servo inverter, the temperature of the heatsink is detected and monitored.

The temperature of the heatsink is measured in the temperature range of 0 ... 80 °C with a tolerance of -2 ... +4 °C. Beyond this temperature range, the measuring accuracy decreases faster.

Parameter

Address	Name / setting range / [default setting]	Information
0x2D84:001, 004, 006	Heatsink temperature: Heatsink temperature • Read only: x.x °C	Display of the current heatsink temperature.
0x2D84:002	Heatsink temperature: Warning threshold 50.0 ... [**90.0**] ... 100.0 °C	Warning threshold for temperature monitoring. • If the heatsink temperature exceeds the threshold set here, the inverter outputs a warning. • The warning is reset with a hysteresis of approx. 5 °C. • If the heatsink temperature increases further and exceeds the non-adjustable error threshold (100 °C), the inverter changes to the "Fault" device status. The inverter is disabled and thus any further operation is stopped.

16.17 Update device firmware

16.17.1 Firmware download with »EASY Starter (firmware loader)«

16.17.1.1 Download via Ethernet connection

Parameter

Address	Name / setting range / [default setting]		Information
0x243C:001	Device: Ethernet commands: Device: Start firmware update • Setting can only be changed if the inverter is disabled.		
	0	**Off / ready**	
	1	On / start	
	4	No access	
	20	20%	Only status feedback
	40	40%	
	60	60%	
	80	80%	

17 Additional functions

17.1 Brake energy management

When braking electrical motors, the kinetic energy of the drive train is fed back regeneratively to the DC bus. This energy causes a DC-bus voltage boost. If the energy fed back is too high, the inverter reports an error.

Several different strategies can serve to avoid DC-bus overvoltage:

- Stopping the deceleration ramp function generator when the active voltage threshold for the brake operation is exceeded
- Use of the "Inverter motor brake" function
- Combination of the above named options

Details

The voltage threshold for braking operation results on the basis of the rated mains voltage set:

Rated mains voltage (0x2540:001)	Voltage thresholds for braking operation	
	Braking operation on	Braking operation off
230 V	390 V DC	380 V DC
400 V	725 V DC	710 V DC
480 V	780 V DC	765 V DC

Parameter

Address	Name / setting range / [default setting]	Information
0x2541:003	Brake energy management: Reduced threshold 0 ... [**0**] ... 100 V	The voltage threshold for the braking operation is reduced by the voltage value set here.

17.1.1 Use of a brake resistor

For braking operation, optionally the brake chopper integrated in the inverter (brake transistor) can be used.

NOTICE

Incorrect dimensioning of the brake resistor may result in the destruction of the integrated brake chopper (brake transistor).

► Only connect a brake resistor complying in terms of performance to terminals R_{B1} and R_{B2} of the inverter.

► Avoiding thermal overload of the brake resistor.

Parameter

Address	Name / setting range / [default setting]	Information
0x2550:001	Brake resistor: Minimum resistance • Read only: x.x Ω	Display of the minimum brake resistance value that can be used.
0x2550:002	Brake resistor: Resistance value 0.0 ... [**180.0**] ... 500.0 Ω	Resistance value of the brake resistor connected. • The value to be entered can be obtained from the brake resistor nameplate.
0x2550:003	Brake resistor: Rated power 0 ... [**5600**] ... 800000 W	Rated power of the brake resistor connected. • The value to be entered can be obtained from the brake resistor nameplate.
0x2550:004	Brake resistor: Maximum thermal load 0 ... [**485**] ... 1000000 kWs	Thermal capacity of the brake resistor connected. • The value to be entered can be obtained from the brake resistor nameplate.
0x2550:006	Brake resistor: Reference resistance	Reference value for the calculation of brake chopper utilization.
	0 **Minimum resistance**	
	1 Resistance value	
0x2550:007	Brake resistor: Thermal load • Read only: x.x %	Display of the utilisation of the brake resistor connected.

Address	Name / setting range / [default setting]		Information
0x2550:008	Brake resistor: Warning threshold 50.0 ... [**90.0**] ... 150.0 %		Warning threshold for brake resistor monitoring. • If the utilisation shown in reaches the threshold set, the response selected in 0x2550:010 is effected. • The warning is reset with a hysteresis of 20 %.
0x2550:010	Brake resistor: Response to warning		Selection of the response that is executed when the warning threshold for brake resistor monitoring is reached.
	0	No response	▸ Severity 📖 574
	1	Fault > CiA402	
	2	**Warning**	
0x2550:011	Brake resistor: Response to error		Selection of the response to be executed when the error threshold for brake resistor monitoring is reached.
	0	**No response**	▸ Severity 📖 574
	1	Fault > CiA402	
	2	Warning	

17.2 Manual jog parameters

Parameter

Address	Name / setting range / [default setting]	Information
0x2836:001	Manual control mode: Current setpoint 0 ... [**30**] ... 200 %	Setting of the current setpoint value for manual control. • 100 % ≡ Rated current (0x2DDF:001)
0x2836:002	Manual control mode: Frequency -1000.0 ... [**0.0**] ... 1000.0 Hz	Setting of the frequency for manual control.
0x2836:003	Manual control mode: Ramp time (current) 0 ... [**0**] ... 1000 ms	Setting of the period of time during which the current setpoint value is achieved from zero onwards.
0x2836:004	Manual control mode: Ramp time (frequency) 0 ... [**500**] ... 10000 ms	Setting of the period of time during which the frequency is achieved from zero onwards. The frequency ramp only starts up when the current ramp has reached the value configured in 0x2836:001 (Current setpoint).
0x2836:005	Manual control mode: Time monitoring (frequency) 0 ... [**2500**] ... 100000 ms	Setting of the time period for time monitoring. • The manual control features a time monitoring function which is coupled to a write access to 0x2836:002 (Frequency). • If no write access to 0x2836:002 takes place within the time period set here, the frequency is moved to zero via the parameterised ramp. When the 0 Hz have been reached, the inverter changes to the error status and is inhibited. After acknowledging the error, the CiA402 state machine must be switched from "Switch-on inhibited" back to the "Operation enabled" state before proceeding with manual control.
0x2836:006	Manual control mode: Current controller gain 0.00 ... [**20.00**] ... 750.00 V/A	Setting of the current controller gain.
0x2836:007	Manual control mode: Current controller reset time 0.01 ... [**20.00**] ... 2000.00 ms	Setting of the current controller reset time.

17.3 Mains failure control

This function can decelerate the drive in the event of a mains voltage failure and use its kinetic energy to maintain the DC-bus voltage for a certain period of time. This makes it possible to keep the drive running during a brief failure of the mains voltage or, in the event of a longer failure, to run it to a standstill in a guided manner.

Details

The mains failure control is activated when the mains failure monitoring has detected a mains failure.

In the default setting, the mains failure control is switched off. ▶ Activate mains failure control 📖 464

Controlled regenerative operation raises the DC-bus voltage. This can trigger an overvoltage fault. If an overvoltage fault is to be reliably excluded, the excess energy must be dissipated by a brake resistor.

Functional description of the mains failure monitoring

The mains failure monitoring compares the currently measured DC-bus voltage with the filtered DC-bus voltage.

If the measured DC-bus voltage 0x6079 is smaller than the filtered DC-bus voltage 0x2D66:014 and smaller than 90 % of the nominal DC-bus voltage, a mains failure is detected.

The mains failure is signaled in status word 2 of the inverter: 0x2833, bit 14 (Mains failure detected)

If a lot of kinetic energy is fed back into the DC bus during a mains failure, the mains failure monitoring will only respond with a delay or possibly not at all due to the DC-bus voltage not dropping.

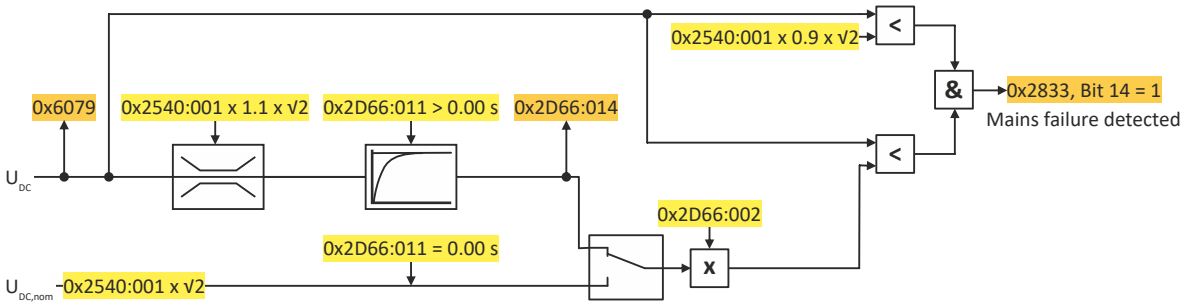

Fig. 60: Function of the mains failure monitoring

Functional description of the mains failure control

Setting 0x2833, bit 14 (Mains failure detected) activates the mains failure control if it is enabled. (0x2D66:001 = 2):

- The motor control switches to speed control with setpoint 0 rpm.
- The deceleration torque ramps up from a starting value to the parameterized maximum value.
  - Maximum value: 0x2D66:012
  - Ramp time: 0x2D66:013
  - The ramp time determines the jerk of the deceleration.
- The starting value depends on the current operating mode of the drive:
  - Operation in motor mode: Starting torque = 0 Nm.
  - Operation in generator mode: Starting torque = 0x6077 (Actual torque)
- After the drive has come to a standstill, the 0x20093181 (Mains failure) error message is output.
- The original motor control is reactivated with the parameterized values.

If undervoltage occurs during mains failure control, the controller is disabled.

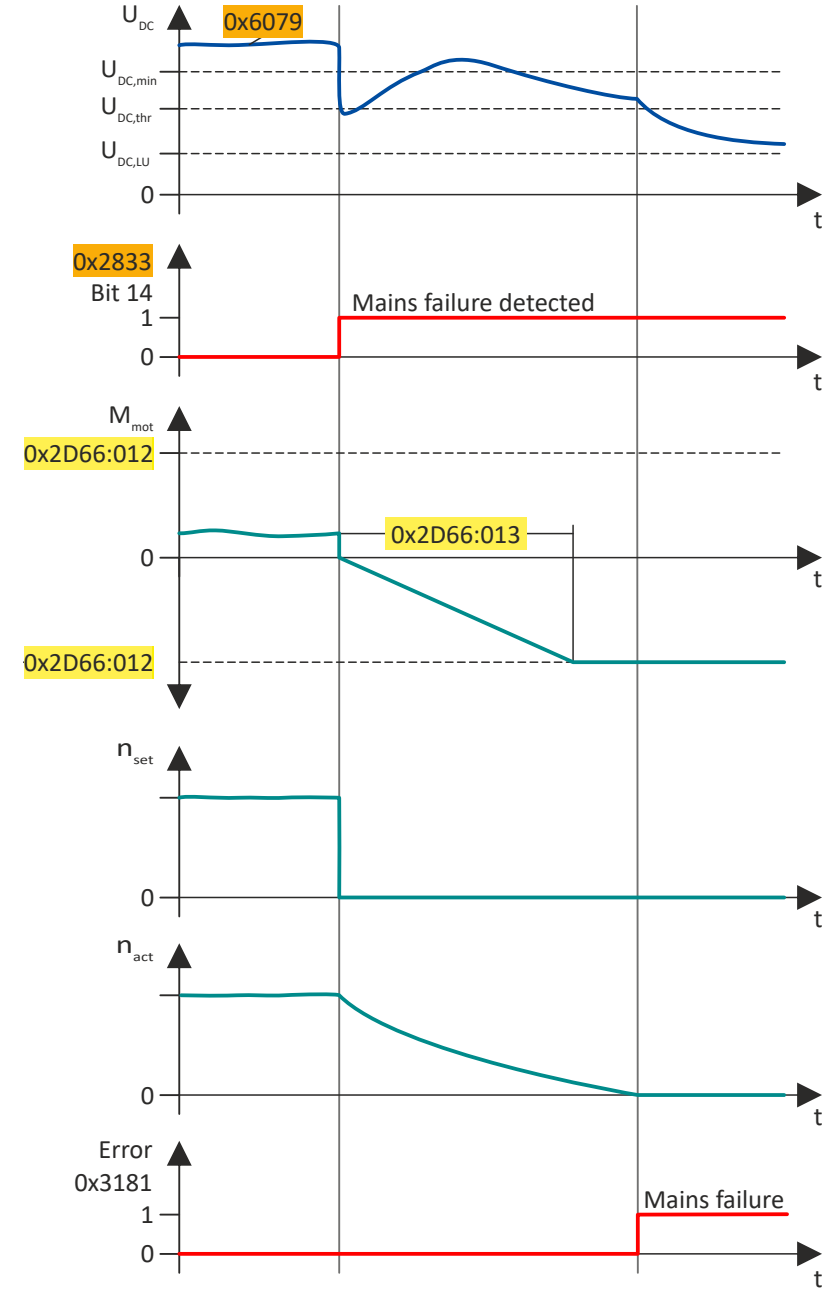

Fig. 61: Sequence of mains failure control in motor operation

Activate mains failure control

How to set up the mains failure control:

1. Define filter time for the DC-bus voltage:
   a) 0x2D66:011 = 0.00 s (no filtering):

      The current DC-bus voltage is compared with the nominal DC-bus voltageRated mains voltage (0x2540:001) x √2.

   Note the following when making this setting:

   The usual short-term fluctuations of the mains voltage can already trigger the mains failure control.

   b) 0x2D66:011 > 0.00 s (filtering active):

      The current DC-bus voltage is compared with the filtered DC-bus voltage 0x2D66:014 weighted with factor 0x2D66:002.

   Note the following when making this setting:

   The usual short-term fluctuations of the mains voltage cannot trigger the mains failure control.

2. Set the activation threshold: ▸ 0x2D66:002 (= weighting for forming the comparison value).

   Recommended setting: 75%

   With the setting 75 %, the mains failure control is activated if the current DC-bus voltage is more than 25 % below the comparison value.

   For high values for the activation threshold, note the following:

   The higher the value, the sooner a mains failure is detected due to a sudden drop in DC-bus voltage.

   The higher the value, the more energy reserve is available for the guided shutdown in the DC bus.

   If the value is too high, there is a risk of false tripping.

   For low values for the activation threshold, note the following:

   If the value is too low, the energy reserve in the DC bus may be too low.

   An undervoltage fault would interrupt the guided shutdown.

3. Activate mains failure control: 0x2D66:001 = 2 (Enabled).

The mains failure control becomes active with these settings when the DC-bus voltage falls below the comparison values.

Behavior in case of mains recovery

The mains failure control is not terminated when the mains returns.

To switch to normal operation immediately, the mains failure control must be terminated via the control word:

Inverter control word ▸ 0x2830, bit 11 = 1 (Stop mains failure control)

Deactivate mains failure control

These events terminate the mains failure control:

- Lock mains failure control ▸ 0x2D66:001 = 0 (Disabled)
- Exit via Inverter control word ▸ 0x2830, bit 11 = 1 (Stop mains failure control)
- Inverter disable
- Inverter disable due to an error (e.g. undervoltage)

Parameter

Address	Name / setting range / [default setting]	Information
0x2D66:001	Mains failure control: Enable function	Enable mains failure control.
	0 Disabled	Operation without mains failure control.
	2 Enabled	Operation with mains failure control.
0x2D66:002	Mains failure control: DC-bus activation level 60 ... [**75**] ... 90 %	Weighting of the source of the comparison value Recommended setting: 75% If the DC-bus voltage falls below the comparison value, the mains failure control is triggered: • 0x2D66:011 = 0.00 s (no filtering): Comparison value = nominal DC-bus voltage (0x2540:001 x √2) x 0x2D66:002. • 0x2D66:011 > 0.00 s (filtering active): Comparison value = filtered DC-bus voltage (0x2D66:014) x 0x2D66:002.
0x2D66:011	Mains failure control: Filter time 0.00 ... [**0.00**] ... 60.00 s	Filter time for filtering the measured DC-bus voltage. 0x6079 0.00 s = no filtering The setting also determines the source of the comparison value for detecting the mains failure: • 0x2D66:011 = 0.00 s (no filtering): Source = nominal DC-bus voltage (0x2540:001 x √2). • 0x2D66:011 > 0.00 s (filtering active): Source = filtered DC-bus voltage (0x2D66:014).
0x2D66:012	Mains failure control: Ramp max. torque 0.0 ... [**30.0**] ... 3276.7 %	Maximum torque of the torque ramp for braking the drive to standstill. Reference: Rated motor torque (0x6076)
0x2D66:013	Mains failure control: Ramp time 0.00 ... [**1.00**] ... 5.00 s	Ramp time for reaching the maximum torque. Reference: Torque change 0 Nm → maximum torque
0x2D66:014	Mains failure control: Actual DC bus voltage (filtered) • Read only: x.xxx V	Display of the filtered DC-bus voltage.

17.4 Oscilloscope function

The oscilloscope function is operated via the separate "Oscilloscope" tab of the »EASY Starter« engineering tool. Here, you can find the user interface with all the relevant dialogs and setting options.

Preconditions

Configuring the oscilloscope and starting the recording is only possible when an online connection to the inverter has been established.

User interface

In the Lenze engineering tool used, set the trigger condition and the sample rate via the oscilloscope user interface when an online connection to the inverter has been established and select the parameters to be recorded.

The configuration is transferred into the inverter and checked each time it changes. Should the check identify invalid settings, the oscilloscope triggers an error message.

After the measurement is completed and when an online connection has been established, the measured data in the inverter is transmitted to the engineering tool and represented graphically on the oscilloscope user interface.

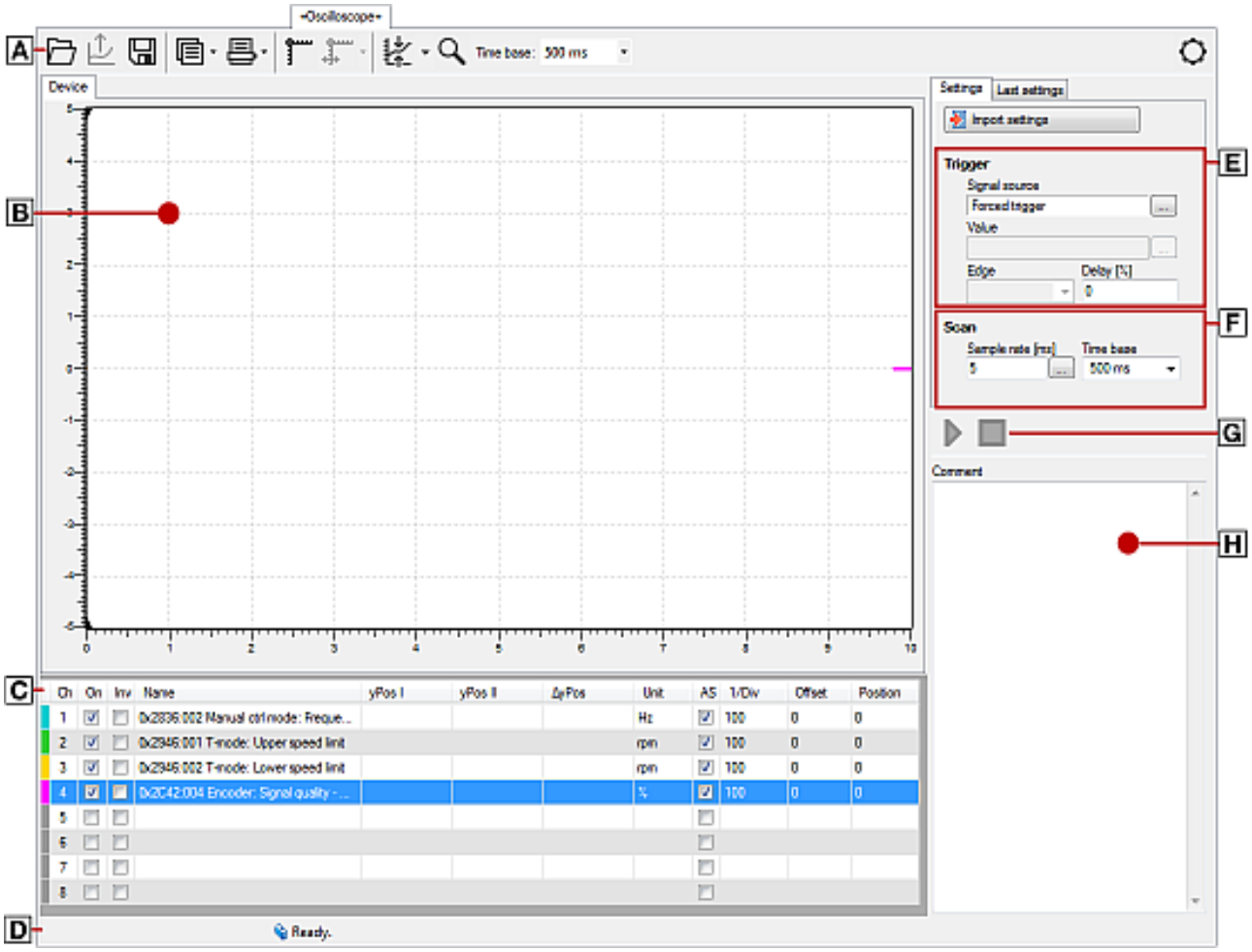

A	Oscilloscope toolbar	E	Set trigger conditions
B	Oscillogram field	F	Set sample rate and time base
C	**Channel** list field	G	Start / stop of recording
D	Status line	H	Comment input field and error message

Toolbar

Icon	Function
	Load oscillogram / configuration from file
	Load recorded oscillogram from the device
	Save oscillogram in file
	Copy oscillogram to the clipboard
	Print oscillogram
	Display cursor
	Center cursor
	Scale curve automatically
	Activate zoom function
"Time base:"	Display of the set time base
	Tool settings (right-hand side of the toolbar)

Technical data	
Number of channels	1 ... 8
Data memory depth	Maximally 65535 measured values for each channel
Data width of a channel	Maximally 64 bits, according to the data type of the parameter to be recorded
Sample rate	62.5 µs or a multiple thereof, max. 100 ms
Recording duration at lowest sampe rate	4.1 s (62.5 µs * 65535 measured values)
Recording duration at highest sample rate	6553,5 s (100 ms * 65535 measured values)
Maximum time base	655,35 s
Trigger level	According to the value range of the parameter to be triggered
Trigger delay	-100 % ... +400 %
Trigger source	Channel 1 ... 8

Selecting parameters to be recorded

The oscilloscope supports up to eight channels, thus maximally eight parameters can be recorded in an oscillogram. The **Channels** list field serves to configure the parameters to be recorded as signal sources:

Column	Name	Meaning
1	-	Curve colour for the representation in the oscillogram
2	Ch	Channel number
3	On	on / off
4	Inv	Inversion on / off
5	Name	Selection of the parameter to be recorded
6	yPos I	Value at cursor I in vertical direction
7	yPos II	Value at cursor II in vertical direction
8	| ΔyPos |	Difference between the two values of yPos I and yPos II (displayed as amount)
9	Unit	Scaling
10	AS	Activation / deactivation of the autoscaling function
11	1 / Div	
12	Offset	The offset value is subtracted from the recorded raw value before the scaling is executed. This serves to, e. g., make very small value fluctuations visible within one consistently very high recording value (e. g. harmonics with a low amplitude).
13	Position	Regarding the vertical curve scale -5 ... 5, the position value determines the vertical position of the zero point of the Y axis of a curve.

How to select a parameter for recording:

1. Double-click the "Name" column in the **Channel** list field to open the "Selection of signal sources" dialog box.
2. Select the parameters to be recorded in the dialog box.
3. Press the "Ok" button. This closes the dialog box and the selection is accepted.
4. Repeat the steps 1 ... 3 to select up to seven further parameters to be recorded.

The selected parameters are recorded when the oscilloscope is started.

How to change a parameter for recording:

1. Double-click the parameter to be changed in the **Channels** list field in the "Name" column.
2. Make a new selection in the "Selection of signal sources" dialog box.
3. Press the "Ok" button. This closes the dialog box and the selection is accepted.

The changed parameters are recorded when the oscilloscope is started.

How to cancel a selection again:

1. Right-click the parameter to be removed in the **Channels** list field in the "Name" column to open the context menu.
2. Select the "Remove signal source" command in the context menu.

Defining the recording time / sample rate

How to define the duration and sample rate for recording:

1. Select the desired time base in the time base list field.
   a) The current setting of the time base multiplied by 10 results in the recording time.
   b) As the size of the measured data memory in the inverter is limited, a compromise is usually made between sample rate and recording time.
2. Either enter the desired sample rate in [ms] in the sample rate input field or open the "Sample rate selection" dialog by clicking the "Sample rate" button and select a sample rate < 1 ms.
   a) The sample rate in the inverter is automatically corrected to integer multiples of 62.5 µs.

Thus, the duration and sample rate are defined for recording.

Defining the trigger condition

Based on the trigger condition, define the starting time of recording in the inverter. The oscilloscope offers various trigger conditions which serve to control the recording of the measured values.

The trigger threshold can be changed in the "Value" input field on the "Settings" tab if the channel is selected in "Signal source" that contains the corresponding parameter.

Setting	Function
Signal source	Selection of the trigger source:
Channel	Triggering takes place on a channel configured in the "vertical channel settings" list field.
immediate trigger	No trigger condition, recording takes place immediately after the start.
Value	Value, from which onwards triggering is caused.
Deceleration	Time delay of recording with regard to the trigger event.
Pre-trigger	When entering a negative delay time, you can detect signals that occur before the trigger event. 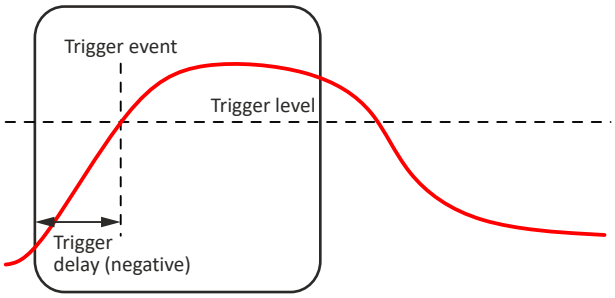 The trigger time is marked with a dashed line in the oscillogram. If it is triggered on the occurrence of an event, values caused by the event can be detected in this way.
Post-trigger	When entering a positive delay time, you can detect signals that occur a certain time after the trigger event. 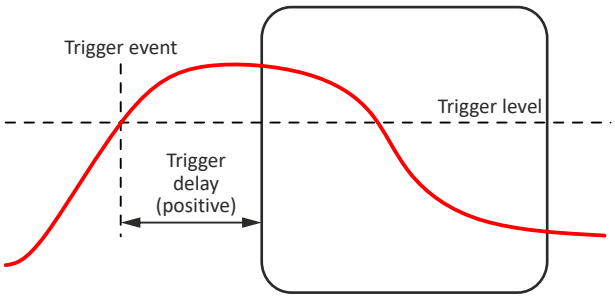
Edge	Two trigger types are available:
increasing	First, the value must fall below the defined trigger value and then exceed it in order that triggering is activated.
decreasing	First, the value must exceed the defined trigger value and then fall below it in order that triggering is activated.

Starting recording

Press the button ▶, "Start recording"

In order to obtain a sample rate as high as possible when the parameter values are recorded, the data is first saved in the measured data memory of the inverter and then transmitted to the Engineering PC as oscillogram. The current recording status is displayed in the status bar.

Adjusting the representation

As soon as the diagram does not show the complete measurement anymore, a scrollbar appears below the time axis. You can use the scrollbar to move the visible section horizontally. The time-axis inscription and the position indicator are automatically corrected during scrolling.

After recording and subsequent transmission of the online oscillogram to the Engineering PC, it is visualised in the oscilloscope. If required, you can now adjust the representation using the zoom function or the automatic scaling function.

Change time base subsequently

A measurement already carried out can be extended or compressed by changing the time base.

For this purpose, change the setting of the time base via the toolbar (on top).

Zoom function

The zoom function will be activated by selecting the in the toolbar. When the function is activated, the button is highlighted.

Zoom function	Proceeding
Zoom selection	Hold down the left mouse button and draw the section to be zoomed: 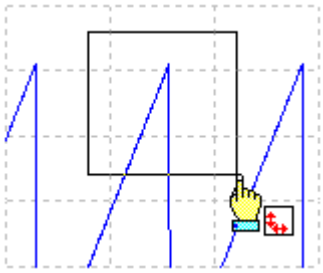 • The selection is shown with a frame. • When the left mouse button is released, the selection is zoomed in the oscillogram.
Horizontal stretching	On the horizontal scale: Hold down the left mouse button and move the mouse pointer to the left to stretch the shown selection from the right edge. Hold down the right mouse button and move the mouse pointer to the right to stretch the shown selection from the left edge. Moving the mouse pointer in opposite direction continuously reduces the stretching.
Vertical stretching	On the vertical scale: Hold down the left mouse button and move the mouse pointer to the bottom to stretch the shown selection from the top. Hold down the right mouse button and move the mouse pointer to the top to stretch the shown selection from the bottom. Moving the mouse pointer in opposite direction continuously reduces the stretching.
Return to original representation	Click the right mouse button in the diagram to return step by step to the original representation.

Automatic scaling function

Use the automatic scaling function to automatically scale and reposition the representation of selectable signal characteristics in the oscillograph and reset the offset to "0".

How to execute automatic scaling

1. Select the channels and parameters for automatic scaling in the **Channels** dialog box.
2. Click the corresponding symbol in the oscilloscope toolbar to activate the automatic scaling function.

The cursor function

In addition to the zoom and scaling function, there is the cursor function which is called by double-clicking the **Channels** list field.

The double-click opens a list of all signal sources with the following options:

- Display of individual measured values of a selectable channel
- Addition, subtraction or multiplication of any two measured values
- Square-law mean value of any two measured values

How to use the cursor function:

1. Go to the oscilloscope toolbar and click the "Cursor" button to activate the cursor function.
   a) Two movable vertical measuring lines are displayed in the oscillogram.
2. Select the channel for which individual measuring lines are to be displayed from the **Channels** list field.
3. Hold down the left mouse button and drag the red vertical measuring line to the desired position.
   a) The active measuring line is represented by a continuous line, the inactive measuring line is represented by a dotted line.
   b) If you position the mouse pointer over the inactive measuring line, the measuring line automatically becomes active.
   c) The columns **yPos I** and **yPos II** in the **Channels** list field display the values measured at the measuring lines. The column **ΔyPos** or **QWM** displays the cursor differential value or square-law mean value of all values between both cursors.
   d) The sum value to be displayed can be defined in the "tool settings" dialog. This dialog can be set via the "Tool settings" dialog on the right in the toolbar.
   e) Comparing peak values: Several values displayed in the oscillogram can be compared to each other using a horizontal measuring line. The measuring line is automatically created based on the current cursor point and thus cannot be shifted.

Managing oscillograms

If several data records are loaded in the oscilloscope at the same time, the measured data to be displayed is selected via the respective tab above the displayed oscillogram. There are three types of oscillograms:

- **Device oscillogram**

  The device oscillogram is the only oscillogram to establish a connection to the target system in order to carry out an oscilloscope measurement. It is always displayed as the first "Device on the left" tab.
- **Offline oscillogram**

  The offline oscillogram is an oscillogram already saved in the Engineering PC.
  - The configuration of the offline oscillogram can be reused for future recordings.
  - The offline oscillogram is displayed as a tab with the file name that was allocated for this oscillogram while being saved.
- **Merge oscillogram**

  The merge oscillogram ("Merge" tab) is automatically available if two or more oscillograms are loaded in the oscilloscope at the same time.
  - In the merge oscillogram, several characteristics from the currently loaded oscillograms can be overlaid, e. g. to compare signal characteristics from different recordings.

Commenting oscillograms

You can add a comment on the selected oscillogram into the comment input field.

- When you execute the "Save oscillogram" command, the comment is saved together with the oscillogram in the file.
- When you select an oscillogram with a comment to be loaded in the "Load oscillogram" dialog box, this comment is displayed in the dialog box.

Saving oscillogram in file

After selecting the parameters to be recorded from the selection list of the signal sources and making any further necessary settings, you can save this configuration and the recording if already carried out on the Engineering PC for a later reuse.

How to save the oscillogram:

1. Click the symbol in the toolbar. the "Save oscillogram" dialog box is displayed.
2. Define a name in the Name input field of the oscillogram to be saved.
3. Click the "Export to file" button.
4. Specify the folder and file name for the oscillogram be stored in the Save as dialog box.
5. Click the Save button. The dialog box is closed.

The current oscillogram is saved.

Loading oscillogram / configuration from file

The reuse of a saved configuration is only reasonable for inverters of the same type, as otherwise due to a scaling of the oscilloscope channels that is not adapted, incorrect values are displayed!

Data sets/configurations which have already been saved can be reloaded into the oscilloscope any time, e.g. for the overlay function.

How to load an oscillogram or a configuration:

1. Click the symbol in the oscilloscope toolbar. The "Load oscillogram" dialog box is displayed.
2. Press the Search... button.
3. Select the file to be imported within the desktop environment from the Open dialog box.
4. If the oscillogram is to be used as configuration, select the As configuration... option.
5. Click the Open button. The dialog box is closed.

The selected oscillogram or configuration is imported.

Closing the oscillogram

You can close an open OFFLINE oscillogram again any time.

- After an oscillogram is closed, it is no longer available in the oscillogram list field. The oscilloscope changes automatically to the display of the ONLINE oscillogram.
- If the closed oscillogram was included in the MERGE oscillogram, its channels will be removed from the MERGE oscillogram.
- Go to the oscilloscope toolbar and click the symbol to close the currently displayed OFFLINE oscillogram.

Overlay function

The overlay function serves to overlay several characteristics from the currently loaded data sets, e.g. to compare signal characteristics from different recordings.

- If two or more oscillograms are loaded in the oscilloscope, e.g. the ONLINE oscillogram and an oscillogram that was previously loaded into a file, a "MERGE" oscillogram will be automatically available in the "Oscillogram" list field.
- If the merge oscillogram is selected, the desired characteristics to be overlaid or compared can be selected from the loaded oscillograms in the Vertical channel settings group field.
- If an ONLINE oscillogram is used in the MERGE oscillogram, an update is carried out in the MERGE oscillogram in the case of a renewed recording.
- Removing variables from an OFFLINE or ONLINE oscillogram causes the characteristics in the MERGE oscillogram to be deleted.

Copying an oscillogram to the clipboard

For documentation purposes, it is possible to copy the measured data of an oscillogram as a table or, alternatively, the oscilloscope user interface as a picture, to the clipboard for use in other programs.

How to copy the oscillogram to the clipboard:

1. Click the symbol in the oscilloscope toolbar. The "Copy oscillogram" dialog box is displayed.
2. Select the desired option:
   a) Curve points: the measured data is copied to the clipboard as a table.
   b) Screenshot: the oscilloscope user interface is copied to the clipboard as a picture.
3. Press the OK button. The dialog box is closed and the selected option is copied to the clipboard.

18 Safety functions

Supported safety functions for "Basic Safety - STO"

- Safe torque off (STO) 477

Supported safety functions for "Extended Safety"

- **Safe stop functions**
  - Safe torque off (STO) 477
  - Safe stop 1 (SS1) 479
  - Safe stop 2 (SS2) 482
  - Safe operating stop (SOS) 486
  - Safe stop emergency (SSE) 488
- **Safe speed**
  - Safe maximum speed (SMS) 490
  - Safe speed monitor (SSM) 498
  - Safely-limited speed (SLS) 491
- **Safe direction**
  - Safe direction (SDI) 501
- **Safely limited increment**
  - Safely-limited increment (SLI) 499
- **Safely limited position**
  - Safely-limited position (SLP) 504
- **Safe position evaluation**
  - Safe homing (SHom) 507
- **Safe cam**
  - Safe cam (SCA) 514
- **Safe position-dependent speed**
  - Position-dependent safe speed (PDSS) 516
- **Safe brake control**
  - Safe brake control (SBC) 520
- **Cascading**
  - STO cascading (CAS) 523
- **Operating mode selection**
  - Operation mode selector (OMS) 525
  - Repair mode selector (RMS) 528
  - Enable switch (ES) 531
- **Muting**
  - Safe Muting (MUT) 532

Safety bus (S-Bus)

- PROFIsafe connection 536
- FSoE connection 539

Safe hardware

- Safe inputs 542
- Safe output 543

18.1 General information and basics

18.1.1 Stop functions

The stop functions include:

- Safe torque off (STO) 📖 477
- Safe stop emergency (SSE) 📖 488
- Safe stop 1 (SS1) 📖 479
- Safe stop 2 (SS2) 📖 482
- Safe operating stop (SOS) 📖 486

The stop functions differ according to how they are triggered:

- Normal stop (simple stop)
  - Triggered by a safe input with the parameterized functions STO, SS1, or SS2.
  - Triggered by the activated bits STO, SS1 or SS2 via the safety bus.
- Emergency stop
  - Triggered by a safe input with the parameterized function SSE.
  - Triggered by the activated bits SSE via the safety bus.
  - STO or SS1 can be configured as the function to be executed via the parameter "SSE: Emergency stop function".
- Error stop
  - Triggered as a response to an error.
- Repair Mode Select

18.1.2 Prioritisation

Stop functions with higher priority influence the flow of lower-order functions which have already been initiated.

Hierarchy:

1. Safe torque off (STO)
   - The function STO has the highest priority and hence precedence over all other functions.
   - Functions that have already been initiated (e. g. SS1 or SS2) are aborted and the drive is switched off.
2. Safe stop 1 (SS1)
   - The function SS1 has priority over SS2.
   - Observing the defined stopping time for SS1 and SS2 as well as the SS1 mode, the drive is rendered torqueless.
3. Monitoring functions
   - The monitoring functions have equal priorities and can be executed simultaneously with the stop function.

18.1.3 Restart

The restart sets the drive in motion after it was previously brought to a standstill via a stop function.

Whether the restart needs to be acknowledged or if it launches automatically can be parameterized in a manner dependent on the preceding stop function:

- Restart behavior according to STO / SS1 (0x2892:001)
- Restart behavior according to SS2 / SOS (0x289F:002)

⚠ DANGER!

The requirement for the safety function is lifted.

The drive may automatically restart when the requirement for the safety function is lifted!

► In the case of automatic restart, you must take external measures to ensure that the drive only restarts after a confirmation in accordance with EN ISO 13849-1.

The restart behaviour after an emergency stop corresponds to that for the restart behaviour parameterised for the stop function STO / SS1.

Preconditions for restart

- Setting "Acknowledged restart"
  - After a normal stop, a Wiederanlaufquittierung (AIS) is necessary.
  - After an error stop, an Fehlerquittierung (AIE) is necessary before the restart can be acknowledged with AIS.
- Setting "Automatic restart"
  - The drive must be in a stopped state (see status bit STO or SOS).
  - The higher-level control must ensure that the drive only restarts after a confirmation.

18.2 Safe torque off (STO)

This function corresponds to a "Stop 0" according to EN 60204.

The motor cannot generate torque and movements of the drive.

⚠ DANGER!

Automatic restart if the request of the safety function is deactivated.

Possible consequence: Death or severe injuries

► You must provide external measures according to EN ISO 13849-1 which ensure that the drive only restarts after a confirmation.

⚠ DANGER!

The power supply is not safely disconnected.

Death or serious injury due to electrical voltage.

► Turn off the power supply.

Preconditions

Motion caused by external forces must be prevented by additional measures such as mechanical braking.

The restart must be set. See chapter "Restart". 📖 476

Functional description

How to safely disconnect the drive:

1. A safety sensor requests the safety function.
2. The transmission of the pulse width modulation is safely switched off by the safety unit. The power drivers do not generate a rotating field anymore.
3. The inverter switches to the STO active device status (status word 0x6041, Bit15 = 0).

The motor is safely switched to torqueless operation (STO).

The functional principle STO depicted applies to Basic Safety and Extended Safety.

The terminals shown apply to Basic Safety.

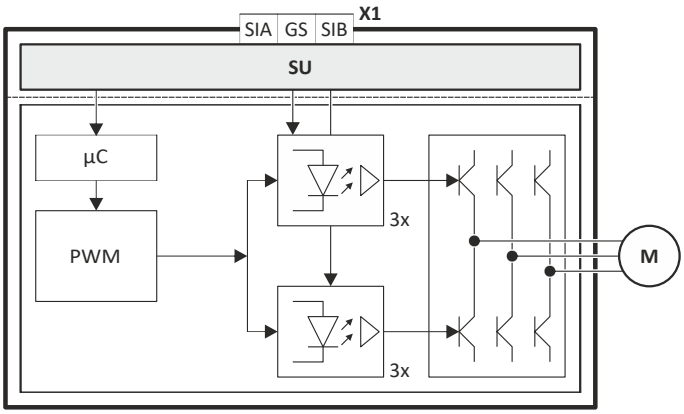

Fig. 62: Functional principle STO

X1	Control terminals of the safety unit	PWM	Pulse width modulation
SU	Hardware interface	M	Motor
µC	Microcontroller		

Function chart

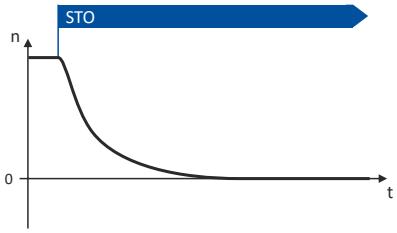

Fig. 63: Safety function STO

Functional sequence and error response have no adjustable parameters.

Activation of the function

- Via a safe input.
- Via the safety bus. ▸ Safe network interfaces 🕮 535
- As response to the error stop request.
- As response to the emergency stop request.

18.3 Safe stop 1 (SS1)

This function corresponds to a "Stop 1" according to EN 60204.

The function monitors the parameterized stopping time of the drive (n = 0) and switches the drive to torque-free operation via the mode parameterized in 0x2897:001.

Preconditions

The drive is brought to standstill via the application.

Movements caused by external forces require additional measures. When the stopping time is defined, the application time of the brake must be taken into consideration.

The restart is possible after the stopping time has completely elapsed. An exception from this is the special operation.

Functional description

n = 0 means that the speed of the motor is lower than the motor speed parameterized in the tolerance window. ▸ 0x287B:001

The deceleration ramp can be parameterized and monitored for the SS1 stop function.

SS1-t 0x2897:001 = **0 (STO after stopping time)**	**SS1-t** 0x2897:001 = **1 (STO at n = 0)**
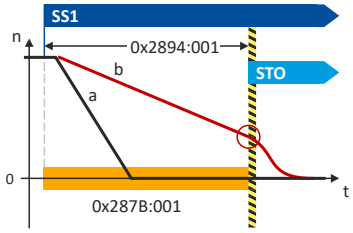	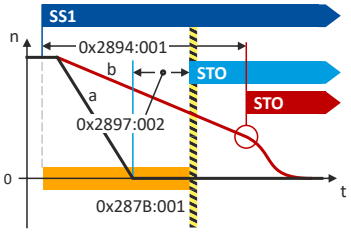
The safety function SS1 switches the inverter to STO when the set stopping time has elapsed. ▸ 0x2894:001 The switching operation is triggered regardless of whether the motor is at standstill or not!	With this parameterization the motor comes to a standstill. The deceleration n = 0 selection is parameterized in the following parameter: 0x2897:002
Curve (a): The motor comes to a standstill within the parameterized stopping time.	Curve (a): The deceleration parameterized in 0x2897:002 starts when the speed is lower than the tolerance window of the motor speed parameterized in 0x287B:001. The inverter switches to STO after the speed threshold has reached n=0 and the deceleration time 0x2897:002 has elapsed.
Curve (b): The motor is not yet at standstill at the moment of STO. Switching off with STO causes the motor to coast to a halt.	Curve (b): If the deceleration ramp is set too long, the system switches to STO after the stopping time has elapsed. In the case shown here, the motor coasts to a halt.

Notes on setting the stopping time

Note the following when setting the stopping time 0x2894:001:

- If an encoder is available: 0x2878:001 ≠ 0
  - The speed is calculated from the encoder data.
  - For 0x2897:001 = 1 (STO at n=0), a delay time between the standstill of the motor and the activation of STO can be specified in 0x2897:002.
- If no encoder is available: 0x2878:001 = 0
  - The function evaluates the speed status from the inverter. "n = 0" is reached at speed n ≤ 5 rpm.
  - The stopping time 0x2894:001 monitored by the safety device must be parameterized 0.5 s greater than the stop time parameterized in the inverter.

Activation of the function

- Via a safe input.
- Via the safety bus. ▸ Safe network interfaces 📖 535
- As response to the error stop request.
- As response to the emergency stop request.

Response of the function under normal circumstances

When the stopping time has elapsed (0x2894:001or after falling below the tolerance window (0x287B:001) a standard stop is activated.

The power supply for generating the rotating field is safely interrupted (STO). The motor cannot generate torque and movements of the drive.

Behavior of the function in the event of an error

An error message and an error stop are triggered if:

- The standstill is not reached with the expiry of the stopping time (0x2894:001).
- The parameterized deceleration ramp is exceeded while ramp monitoring is active.

The power supply for generating the rotating field is safely interrupted (STO). The motor cannot generate torque and movements of the drive.

Canceling the Safe Stop request prematurely does not terminate the error stop function.

Parameter

Address	Name / setting range / [default setting]		Information
0x2875:002	S-Bus control bits: SS1 • Read only		Display of the control bit status from the safety bus without filtering and changing the logic.
0x2878:004	Motor encoder (ES): Response time encoder monitoring • Read only: ms		
	12	12	
	50	50	
	100	100	
0x287B:001	Speed: Tolerance window (n=0) • Read only: x rpm		If the speed is within the tolerance window, the status "n = 0 rpm" is valid. Changes only possible in the +Safety parameter list+.
0x2894:001	SS1, SS2: Stopping time • Read only: x ms		
0x2895	SS1 Source SD-In • Read only		Changes only possible in the +Safety parameter list+.
	0	Disabled	
	1	SD-In1	
	2	SD-In2	
	3	SD-In3	
	4	SD-In4	
0x2896	SS1 Source S-Bus • Read only		Changes only possible in the +Safety parameter list+.
	0	Disabled	
	1	Activated	
0x2897:001	SS1: Mode • Read only		
	0	STO after stopping time	
	1	STO at n=0	
0x2897:002	SS1: Delay STO after n=0 • Read only: x ms		

Address	Name / setting range / [default setting]		Information
0x2898	SS1 "SS1 active" - Output • Read only		Changes only possible in the +Safety parameter list+.
	0	Disabled	
	1	SD-Out1 positive logic	
	2	SD-Out1 negative logic	

18.4 Safe stop 2 (SS2)

This function corresponds to a "Stop 2" according to EN 60204.

The function monitors whether the drive has reached the set tolerance margin (n = 0) within the parameterized stopping time. After the stopping time has elapsed or the value has fallen below the tolerance window, the monitoring system switches to safe operating stop (SOS). In the safe operational stop, the drive is not switched to torque-free operation. All control functions remain active to maintain the reached position.

⚠ DANGER!

Uncontrolled rotation of the motor possible if no safety rated encoder system is used.

Possible consequences: Death or severe injuries

► Use a safety rated encoder system to use this function.

Preconditions

The drive is brought to standstill via the application.

Movements caused by external forces require additional measures. When the stopping time is defined, the application time of the brake must be taken into consideration.

The restart is possible after the stopping time has completely elapsed. An exception from this is the special operation.

Functional description

The deceleration ramp can be parameterized and monitored for the SS2 stop function.

SS2-t 0x289B:001 = **0 (SOS after stopping time)**	**SS2-t** 0x289B:001 = **1 (SOS at n = 0)**
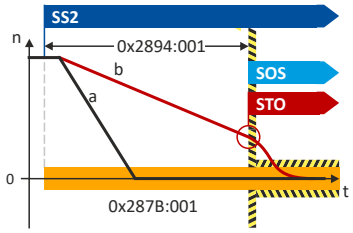	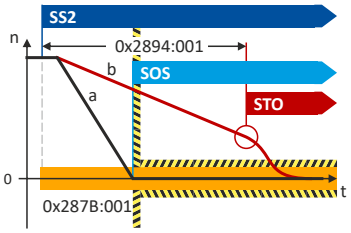
The safe operating stop is activated if the stopping time parameterized in 0x2894:001 has elapsed and the motor speed is lower than the value parameterized in 0x287B:001.	
Curve (a): For details see Safe operating stop (SOS) 📖 486	
Curve (b): STO is also activated if, after the stopping time 0x2894:001 has elapsed, the speed is not lower than the value parameterized in 0x287B:001.	

Activation of the function

- Via a safe input.
- Via the safety bus. ▸ Safe network interfaces 📖 535
- As response to the error stop request.

Response of the function under normal circumstances

When the stopping time has elapsed (0x2894:001or after falling below the tolerance window (0x287B:001), the safety functionSafe operating stop (SOS) is activated.

Behavior of the function in the event of an error

An error message and an error stop are triggered if:

- The standstill is not reached with the expiry of the stopping time (0x2894:001).
- The parameterized deceleration ramp is exceeded while ramp monitoring is active.

The power supply for generating the rotating field is safely interrupted (STO). The motor cannot generate torque and movements of the drive.

Canceling the Safe Stop request prematurely does not terminate the error stop function.

Parameter

Address	Name / setting range / [default setting]		Information
0x2875:003	S-Bus control bits: SS2 • Read only		Display of the control bit status from the safety bus without filtering and changing the logic.
0x2878:004	Motor encoder (ES): Response time encoder monitoring • Read only: ms		
	12	12	
	50	50	
	100	100	
0x287B:001	Speed: Tolerance window (n=0) • Read only: x rpm		If the speed is within the tolerance window, the status "n = 0 rpm" is valid. Changes only possible in the +Safety parameter list+.
0x2894:001	SS1, SS2: Stopping time • Read only: x ms		
0x2899	SS2 Source SD-In • Read only		Changes only possible in the +Safety parameter list+.
	0	Disabled	
	1	SD-In1	
	2	SD-In2	
	3	SD-In3	
	4	SD-In4	
0x289A	SS2 Source S-Bus • Read only		Changes only possible in the +Safety parameter list+.
	0	Disabled	
	1	Activated	
0x289B:001	SS2: Mode • Read only		
	0	SOS after stopping time	
	1	SOS at n=0	
0x289C	SS2 "SS2 active" - Output • Read only		Changes only possible in the +Safety parameter list+.
	0	Disabled	
	1	SD-Out1 positive logic	
	2	SD-Out1 negative logic	

18.5 Ramp monitoring

In addition, the deceleration ramp can be parameterised and monitored for the stop functions SS1 and SS2. If the parameterised ramp is not exceeded, it is then switched to the parameterised stop function STO or SOS.

Condition

- Safe speed evaluation via the parameterized encoder system.
- Ramp monitoring is activated. ▸ 0x2894:002
- The starting value of the ramp and the S-ramp time must be specified.

Functional description

Monitoring the deceleration process achieves a higher level of safety.

- The application guides the drive to standstill.
- If the speed exceeds the parameterized deceleration ramp within the stopping time or before the tolerance window (n = 0) is reached, an error message is triggered and an error stop is initiated.

Safe ramp monitoring for SS1-r and SS2-r	
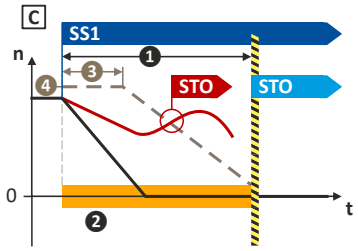	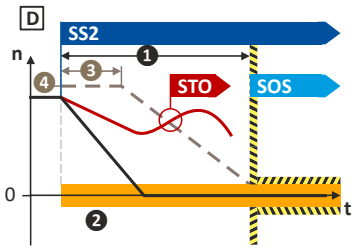

①	0x2894:001	SS1, SS2: Stopping time
②	0x287B:001	Speed monitoring: Tolerance window (n=0)
③	0x2894:003	SS1, SS2: S-ramp time
④	0x2894:005	SS1, SS2: Start offset ramp

The parameterized monitoring ramp considers the parameters of the deceleration ramp in the application.

0...100 % of the actual speed are added to the actual speed as start offset. The sum is used as constant starting value.

Alternative: An absolute value can be parameterized as start offset. ▸ 0x2894:006.

The following parameter determines whether the relative or the absolute offset value is to be used. ▸ 0x2894:004

In the Lenze setting of the start offset, the tolerance window (n=0) is considered as the offset. ▸ 0x2894:005

The monitoring ramp starts after an internal deceleration time has elapsed. The internal deceleration time depends on “SS1, SS2”: smoothing time” and “SS1, SS2”: stopping time”.

Activation

If the stop functions SS1/SS2 are requested, a monitoring ramp is calculated and placed over the current speed characteristic.

Normal behavior

While the stopping time elapses or before the tolerance window (n = 0) is reached, the parameterized speed ramp is not exceeded.

If the stopping time has elapsed and the parameterized speed ramp is not exceeded, the parameterized stop function STO or SOS is triggered.

Error behaviour

An error message and an error stop are triggered if:

- the current speed exceeds the stopping time of the speed ramp parameterised.
- the current speed exceeds the parameterised speed ramp before the tolerance window is reached.

The power supply for generationg the rotating field is safely interrupted (STO). The motor cannot generate torques and movements of the drive.

Parameter

Address	Name / setting range / [default setting]	Information
0x2894:002	SS1, SS2: Ramp monitoring • Read only	
	0 Disabled	
	1 Activated	
0x2894:003	SS1, SS2: Ramp - Smoothing time • Read only: x %	
0x2894:004	SS1, SS2: Ramp - Offset mode • Read only	
	0 Relativ	
	1 Absolute	
0x2894:005	SS1, SS2: Ramp - Start-offset relative • Read only: x %	
0x2894:006	SS1, SS2: Ramp - Start-offset absolute • Read only: x rpm	
0x2894:007	SS1, SS2: Ramp - Currently monitored speed • Read only: x rpm	
0x2894:008	SS1, SS2: Ramp - Minimum difference • Read only: x rpm	

18.6 Safe operating stop (SOS)

In the safe operational stop, the drive is not switched to torque-free operation. All control functions are maintained. The reached position remains active.

⚠ DANGER!

Uncontrolled rotation of the motor possible if no safety rated encoder system is used.

Possible consequences: Death or severe injuries

► Use a safety rated encoder system to use this function.

Preconditions

The drive is brought to standstill via the application.

Functional description

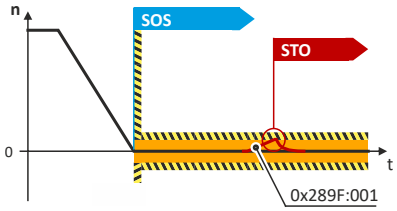

Fig. 64: SOS function

SOS is activated if the motor speed is lower than the tolerance window parameterized in 0x287B:001. In SOS state, relative position changes are added and stored in 0x289F:003. The value in 0x289F:003 is continuously compared with the permissible value in 0x289F:001. If in SOS state the position leaves the safely monitored tolerance window, an error message is generated and STO is activated.

When the SOS state is left, the maximum relative position change is displayed in 0x289F:003. The parameter 0x289F:002 defines the restart behavior after SOS has been deactivated.

When the SOS state is requested again, the sum of the last position changes is reset to zero in 0x289F:003.

Example:

The "SS2 active" state is interrupted by a STO request. If the STO request is reset, the transition to the SOS state occurs. The position deviation is reset to p = 0.

Activation of the function

- Via a safe input.
- Via the safety bus. ▸ Safe network interfaces 🕮 535
- Via the function Safe stop 2 (SS2)🕮 482

Behavior of the function in the event of an error

In the "Safe operational stop (SOS)" final state, an error message is triggered if the position leaves the set tolerance window p = 0. 0x289F:001

Parameter

Address	Name / setting range / [default setting]	Information
0x2875:019	S-Bus control bits: SOS • Read only	Display of the control bit status from the safety bus without filtering and changing the logic.
0x289D	SOS Source SD-In • Read only	Changes only possible in the +Safety parameter list+.
	0 Disabled	
	1 SD-In1	
	2 SD-In2	
	3 SD-In3	
	4 SD-In4	

Address	Name / setting range / [default setting]	Information
0x28A0	SOS "SOS observed" - Output • Read only	Changes only possible in the +Safety parameter list+.
	0 Disabled	
	1 SD-Out1 positive logic	
	2 SD-Out1 negative logic	
0x289E	SOS Source S-Bus • Read only	Changes only possible in the +Safety parameter list+.
	0 Disabled	
	1 Activated	
0x289F:001	SOS: Tolerance window (Delta p=0) • Read only: x incr.	If the position change is within the tolerance window, the status "Δp = 0" is valid. Changes only possible in the +Safety parameter list+.
0x289F:002	SOS: Restart • Read only	Changes only possible in the +Safety parameter list+.
	0 Acknowledged restart	
	1 Automatic restart	
0x289F:003	SOS: Maximum change of position • Read only: x incr.	Value of the maximum position change while SOS has been active. The incremental position value is related to the motor encoder.

18.7 Safe stop emergency (SSE)

The safety function SSE has the highest priority. The safety function SSE is controlled primarily from all states, operating modes or safety functions. Depending on the parameter setting in 0x28A3:001, SSE activates one of these functions:

- Safe torque off (STO)
- Safe stop 1 (SS1)

Connect the emergency stop buttons which must not be overruled by special operation or repair mode select (RMS) to the SSE function. For this purpose, parameterize the safe input in 0x28A1 as the trigger source for the SSE function.

The SSE function can also be requested with the "SSE" bit via the safety bus.

Functional description

The SSE safety function initiates the parameterized stop function with the highest priority.

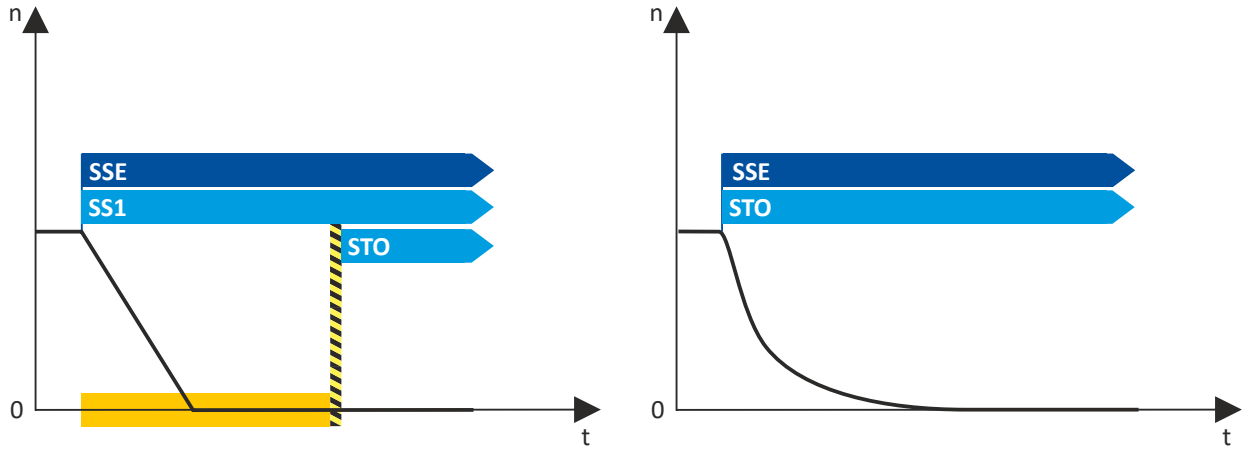

Fig. 65: Safety function SSE

Exception

If a parameterized trigger source for SSE can be deactivated by the "Safe Muting" function, SSE is not effective during "Safe Muting".

Activation of the function

- Via a safe input.
- Via the safety bus. Safe network interfaces 535

Parameter

Address	Name / setting range / [default setting]		Information
0x2875:024	S-Bus control bits: SSE • Read only		Display of the control bit status from the safety bus without filtering and changing the logic.
0x28A1	SSE Source SD-In • Read only		Changes only possible in the +Safety parameter list+.
	0	Disabled	
	1	SD-In1	
	2	SD-In2	
	3	SD-In3	
	4	SD-In4	
0x28A2	SSE Source S-Bus • Read only		Changes only possible in the +Safety parameter list+.
	0	Disabled	
	1	Activated	

Address	Name / setting range / [default setting]	Information
0x28A3:001	SSE: Emergency stop function • Read only	Changes only possible in the +Safety parameter list+.
	0 STO	
	1 SS1	
0x28A4	SSE "SSE active" - Output • Read only	Changes only possible in the +Safety parameter list+.
	0 Disabled	
	1 SD-Out1 positive logic	
	2 SD-Out1 negative logic	

18.8 Safe maximum speed (SMS)

This function monitors the set maximum speed of the motor.

⚠ DANGER!

Uncontrolled rotation of the motor possible if no safety rated encoder system is used.

Possible consequences: Death or severe injuries

► Use a safety rated encoder system to use this function.

Functional description

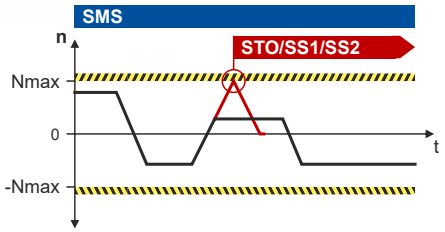

Fig. 66: SMS function

This function monitors the set maximum speed of the motor: 0x28B0:001

If the speed of the drive is within the monitoring limits, the SMS observed status is output.

- Status word: 0x2870:002 Bit 4
- Safe output: 0x28B1

Activation of the function

0x28B0:001 > 0 rpm activates the function.

Behavior of the function in the event of an error

If the monitoring limits are exceeded, an error message is output and a parameterizable error stop is triggered.

Selection of error stop: 0x28B0:002

Possible error stops:

- Safe torque off (STO) 📖 477
- Safe stop 1 (SS1) 📖 479
- Safe stop 2 (SS2) 📖 482

Parameter

Address	Name / setting range / [default setting]	Information
0x28B0:001	SMS: Maximum speed Nmax • Read only: x rpm	Activation of the SMS function and selection of the maximum speed. Nmax = 0 rpm deactivates the function. Changes only possible in the +Safety parameter list+.
0x28B0:002	SMS: Response (n>Nmax) • Read only	Changes only possible in the +Safety parameter list+.
	0 STO	
	1 SS1	
	2 SS2	
0x28B1	SMS "SMS observed" - Output • Read only	Changes only possible in the +Safety parameter list+.
	0 Disabled	
	1 SD-Out1 positive logic	
	2 SD-Out1 negative logic	

18.9 Safely-limited speed (SLS)

This function monitors the parameterized speed limits.

Up to four speeds can be parameterized and monitored simultaneously.

⚠ DANGER!

Uncontrolled rotation of the motor possible if no safety rated encoder system is used.

Possible consequences: Death or severe injuries

► Use a safety rated encoder system to use this function.

Preconditions

The drive must be braked by the application.

Note when you combine the Safely-limited speed (SLS) and Safe direction (SDI) functions.

- The parameterized directions of movement must be coordinated:
  - SLS: 0x28C4:001 ... 0x28C4:004
  - SDI: 0x28BA:001
- SLS braking time and SDI deceleration time must be coordinated:
  - SLS: 0x28C3:001 ... 0x28C3:004
  - SDI: 0x28BA:002
  - The SLS deceleration time starts simultaneously with the SDI deceleration time.

Functional description

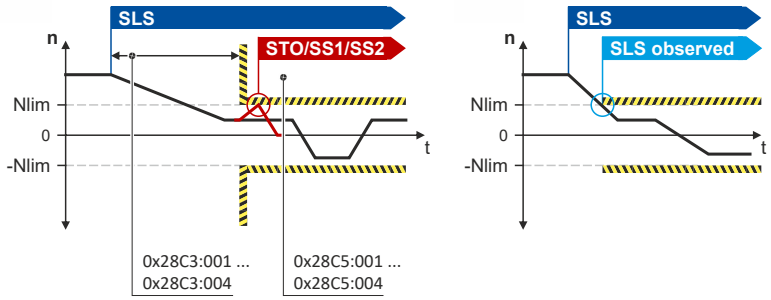

Fig. 67: SLS function

The function monitors the speed limits of the drive: 0x28C2:001 ... 0x28C2:004

Monitoring becomes active when the set braking time has elapsed or when the speed falls below the set speed limit:

- Braking time: 0x28C3:001 ... 0x28C3:004
- Safely limited speed: 0x28C2:001 ... 0x28C2:004

In addition, the permissible direction of movement can be monitored: 0x28C4:001 ... 0x28C4:004

If the speed of the drive is within the monitoring limits, the SLS1 observed ... SLS4 observed status is output.

- Status word: 0x2870:002 Bit 0 ... 0x2870:002 Bit 3.
- Safe output: 0x28C6:001 ... 0x28C6:004

Activation of the function

- Via a safe input.
- Via the safety bus. ▸ Safe network interfaces 🕮 535
- Via internal status signals. (From Safety Firmware V1.1 with parameter set version V1.1)

Behavior of the function in the event of an error

If the monitoring limits are exceeded, an error message is output and a parameterizable error stop is triggered.

Selection of error stop: 0x28C5:001 ... 0x28C5:004

Possible error stops:

- Safe torque off (STO) 📖 477
- Safe stop 1 (SS1) 📖 479
- Safe stop 2 (SS2) 📖 482

Parameter

Address	Name / setting range / [default setting]		Information
0x28BF:001	SLS: SLS1 - Internal source • Read only		Selection of an internal status bit as trigger source for the function. Changes only possible in the +Safety parameter list+.
	0	Disabled	
	678496513	SDIpos active	
	678496769	SDIneg active	
	678497025	SLI active	
	678497793	OMS active	
	678503937	SSM within limits	
	678504193	SDIpos observed	
	678504449	SDIneg observed	
	678504705	SLP1 observed	
	678504961	SLP2 observed	
	678505217	SLP3 observed	
	678505473	SLP4 observed	
	678505729	SCA1 within limits	
	678505985	SCA2 within limits	
	678506241	SCA3 within limits	
	678506497	SCA4 within limits	
	678506753	PDSSpos observed	
	678507009	PDSSneg observed	
	678508801	Positive direction of movement	
0x28BF:002	SLS: SLS1 - Internal source inversion • Read only		Inverted evaluation of the selected internal status bit. Changes only possible in the +Safety parameter list+.
	0	Not inverted	
	1	Invert	

Address	Name / setting range / [default setting]		Information
0x28BF:003	SLS: SLS2 - Internal source • Read only		Selection of an internal status bit as trigger source for the function. Changes only possible in the +Safety parameter list+.
	0	Disabled	
	678496513	SDIpos active	
	678496769	SDIneg active	
	678497025	SLI active	
	678497793	OMS active	
	678503937	SSM within limits	
	678504193	SDIpos observed	
	678504449	SDIneg observed	
	678504705	SLP1 observed	
	678504961	SLP2 observed	
	678505217	SLP3 observed	
	678505473	SLP4 observed	
	678505729	SCA1 within limits	
	678505985	SCA2 within limits	
	678506241	SCA3 within limits	
	678506497	SCA4 within limits	
	678506753	PDSSpos observed	
	678507009	PDSSneg observed	
	678508801	Positive direction of movement	
0x28BF:004	SLS: SLS2 - Internal source inversion • Read only		Inverted evaluation of the selected internal status bit. Changes only possible in the +Safety parameter list+.
	0	Not inverted	
	1	Invert	
0x28BF:005	SLS: SLS3 - Internal source • Read only		Selection of an internal status bit as trigger source for the function. Changes only possible in the +Safety parameter list+.
	0	Disabled	
	678496513	SDIpos active	
	678496769	SDIneg active	
	678497025	SLI active	
	678497793	OMS active	
	678503937	SSM within limits	
	678504193	SDIpos observed	
	678504449	SDIneg observed	
	678504705	SLP1 observed	
	678504961	SLP2 observed	
	678505217	SLP3 observed	
	678505473	SLP4 observed	
	678505729	SCA1 within limits	
	678505985	SCA2 within limits	
	678506241	SCA3 within limits	
	678506497	SCA4 within limits	
	678506753	PDSSpos observed	
	678507009	PDSSneg observed	
	678508801	Positive direction of movement	
0x28BF:006	SLS: SLS3 - Internal source inversion • Read only		Inverted evaluation of the selected internal status bit. Changes only possible in the +Safety parameter list+.
	0	Not inverted	
	1	Invert	

Address	Name / setting range / [default setting]		Information
0x28BF:007	SLS: SLS4 - Internal source • Read only		Selection of an internal status bit as trigger source for the function. Changes only possible in the +Safety parameter list+.
	0	Disabled	
	678496513	SDIpos active	
	678496769	SDIneg active	
	678497025	SLI active	
	678497793	OMS active	
	678503937	SSM within limits	
	678504193	SDIpos observed	
	678504449	SDIneg observed	
	678504705	SLP1 observed	
	678504961	SLP2 observed	
	678505217	SLP3 observed	
	678505473	SLP4 observed	
	678505729	SCA1 within limits	
	678505985	SCA2 within limits	
	678506241	SCA3 within limits	
	678506497	SCA4 within limits	
	678506753	PDSSpos observed	
	678507009	PDSSneg observed	
	678508801	Positive direction of movement	
0x28BF:008	SLS: SLS4 - Internal source inversion • Read only		Inverted evaluation of the selected internal status bit. Changes only possible in the +Safety parameter list+.
	0	Not inverted	
	1	Invert	
0x2875:004	S-Bus control bits: SLS1 • Read only		Display of the control bit status from the safety bus without filtering and changing the logic.
0x2875:005	S-Bus control bits: SLS2 • Read only		
0x2875:006	S-Bus control bits: SLS3 • Read only		
0x2875:007	S-Bus control bits: SLS4 • Read only		
0x28C0:001	SLS: SLS1 - Source SD-In • Read only		Changes only possible in the +Safety parameter list+.
	0	Disabled	
	1	SD-In1	
	2	SD-In2	
	3	SD-In3	
	4	SD-In4	
0x28C0:002	SLS: SLS2 - Source SD-In • Read only		Changes only possible in the +Safety parameter list+.
	0	Disabled	
	1	SD-In1	
	2	SD-In2	
	3	SD-In3	
	4	SD-In4	
0x28C0:003	SLS: SLS3 - Source SD-In • Read only		Changes only possible in the +Safety parameter list+.
	0	Disabled	
	1	SD-In1	
	2	SD-In2	
	3	SD-In3	
	4	SD-In4	

Address	Name / setting range / [default setting]		Information
0x28C0:004	SLS: SLS4 - Source SD-In • Read only		Changes only possible in the +Safety parameter list+.
	0	Disabled	
	1	SD-In1	
	2	SD-In2	
	3	SD-In3	
	4	SD-In4	
0x28C1:001	SLS: SLS1 - Source S-Bus • Read only		Changes only possible in the +Safety parameter list+.
	0	Disabled	
	1	Activated	
0x28C1:002	SLS: SLS2 - Source S-Bus • Read only		Changes only possible in the +Safety parameter list+.
	0	Disabled	
	1	Activated	
0x28C1:003	SLS: SLS3 - Source S-Bus • Read only		Changes only possible in the +Safety parameter list+.
	0	Disabled	
	1	Activated	
0x28C1:004	SLS: SLS4 - Source S-Bus • Read only		Changes only possible in the +Safety parameter list+.
	0	Disabled	
	1	Activated	
0x28C2:001	SLS: SLS1 - Limited speed Nlim1 • Read only: x rpm		Setting of the safely limited speed. Changes only possible in the +Safety parameter list+.
0x28C2:002	SLS: SLS2 - Limited speed Nlim2 • Read only: x rpm		
0x28C2:003	SLS: SLS3 - Limited speed Nlim3 • Read only: x rpm		
0x28C2:004	SLS: SLS4 - Limited speed Nlim4 • Read only: x rpm		
0x28C3:001	SLS: SLS1 - Braking time Nlim1 • Read only: x ms		Safely monitored time to decelerate the drive below the set limited speed. Changes only possible in the +Safety parameter list+.
0x28C3:002	SLS: SLS2 - Braking time Nlim2 • Read only: x ms		
0x28C3:003	SLS: SLS3 - Braking time Nlim3 • Read only: x ms		
0x28C3:004	SLS: SLS4 - Braking time Nlim4 • Read only: x ms		
0x28C4:001	SLS: SLS1 - Permitted direction • Read only		Changes only possible in the +Safety parameter list+.
	0	Both directions enabled	
	1	Positive direction enabled	
	2	Negative direction enabled	
0x28C4:002	SLS: SLS2 - Permitted direction • Read only		Changes only possible in the +Safety parameter list+.
	0	Enable both directions	
	1	Positive direction enabled	
	2	Negative direction enabled	
0x28C4:003	SLS: SLS3 - Permitted direction • Read only		Changes only possible in the +Safety parameter list+.
	0	Enable both directions	
	1	Positive direction enabled	
	2	Negative direction enabled	

Address	Name / setting range / [default setting]		Information
0x28C4:004	SLS: SLS4 - Permitted direction • Read only		Changes only possible in the +Safety parameter list+.
	0	Enable both directions	
	1	Positive direction enabled	
	2	Negative direction enabled	
0x28C5:001	SLS: SLS1 - Response (n>Nlim1) • Read only		Changes only possible in the +Safety parameter list+.
	0	STO	
	1	SS1	
	2	SS2	
0x28C5:002	SLS: SLS2 - Response (n>Nlim2) • Read only		Changes only possible in the +Safety parameter list+.
	0	STO	
	1	SS1	
	2	SS2	
0x28C5:003	SLS: SLS3 - Response (n>Nlim3) • Read only		Changes only possible in the +Safety parameter list+.
	0	STO	
	1	SS1	
	2	SS2	
0x28C5:004	SLS: SLS4 - Response (n>Nlim4) • Read only		Changes only possible in the +Safety parameter list+.
	0	STO	
	1	SS1	
	2	SS2	
0x28C6:001	SLS: "SLS1 active" - Output • Read only		Changes only possible in the +Safety parameter list+.
	0	Disabled	
	1	SD-Out1 positive logic	
	2	SD-Out1 negative logic	
0x28C6:002	SLS: "SLS2 active" - Output • Read only		Changes only possible in the +Safety parameter list+.
	0	Disabled	
	1	SD-Out1 positive logic	
	2	SD-Out1 negative logic	
0x28C6:003	SLS: "SLS3 active" - Output • Read only		Changes only possible in the +Safety parameter list+.
	0	Disabled	
	1	SD-Out1 positive logic	
	2	SD-Out1 negative logic	
0x28C6:004	SLS: "SLS4 active" - Output • Read only		Changes only possible in the +Safety parameter list+.
	0	Disabled	
	1	SD-Out1 positive logic	
	2	SD-Out1 negative logic	
0x28C7:001	SLS: "SLS1 observed" - Output • Read only		Changes only possible in the +Safety parameter list+.
	0	Disabled	
	1	SD-Out1 positive logic	
	2	SD-Out1 negative logic	
0x28C7:002	SLS: "SLS2 observed" - Output • Read only		Changes only possible in the +Safety parameter list+.
	0	Disabled	
	1	SD-Out1 positive logic	
	2	SD-Out1 negative logic	

Address	Name / setting range / [default setting]		Information
0x28C7:003	SLS: "SLS3 observed" - Output • Read only		Changes only possible in the +Safety parameter list+.
	0	Disabled	
	1	SD-Out1 positive logic	
	2	SD-Out1 negative logic	
0x28C7:004	SLS: "SLS4 observed" - Output • Read only		Changes only possible in the +Safety parameter list+.
	0	Disabled	
	1	SD-Out1 positive logic	
	2	SD-Out1 negative logic	
0x2907:001	Additional speed limitation 0 ... [**0**] ... 480000 rpm		
0x500A:150	SLS1 0.0000 ... [**0.0000**] ... 214748.3647		
0x500A:151	SLS1 - deceleration time 0.000 ... [**0.000**] ... 2147483.647 s		
0x500A:152	SLS2 0.0000 ... [**0.0000**] ... 214748.3647		
0x500A:153	SLS2 - deceleration time 0.000 ... [**0.000**] ... 2147483.647 s		
0x500A:154	SLS3 0.0000 ... [**0.0000**] ... 214748.3647		
0x500A:155	SLS3 - deceleration time 0.000 ... [**0.000**] ... 2147483.647 s		
0x500A:156	SLS4 0.0000 ... [**0.0000**] ... 214748.3647		
0x500A:157	SLS4 - deceleration time 0.000 ... [**0.000**] ... 2147483.647 s		
0x500A:159	Compensation velocity of SLS 0.0000 ... [**0.0000**] ... 214748.3647		
0x500A:160	Follower - Response to SLS		
	false	Inactive	
	true	Active	
0x500A:161	Speed controller limitation (SLS)		
	false	Inactive	
	true	Active	
0x500A:162	Deactivate safety interface 0x00000000 ... [**0x00000000**] ... 0xFFFFFFFF		
	Bit 1	Ignore SS1 request	
	Bit 2	Ignore SS2 request	
	Bit 3	Ignore SLS1-4 request	
	Bit 4	Ignore SDI request	
	Bit 5	Ignore SBC request	
0x500A:163	Limiter status • Read only		
	Bit 0	STO active	
	Bit 1	SS1 active	
	Bit 2	SS2 active	
	Bit 3	SOS active	
	Bit 4	SLS1 active	
	Bit 5	SLS2 active	
	Bit 6	SLS3 active	
	Bit 7	SLS4 active	
	Bit 8	SDIpos active	
	Bit 9	SDIneg active	

18.10 Safe speed monitor (SSM)

This function monitors the amount of a set speed value.

⚠ DANGER!

Uncontrolled rotation of the motor possible if no safety rated encoder system is used.

Possible consequences: Death or severe injuries

► Use a safety rated encoder system to use this function.

NOTICE

The function has no hysteresis.

Possible consequences: The safe output can switch frequently when the speed of the drive is near the monitoring limit.

Mechanical actuators at the safe output could wear out more quickly due to frequent switching.

► In this case, avoid continuous operation at the monitoring limit.

Functional description

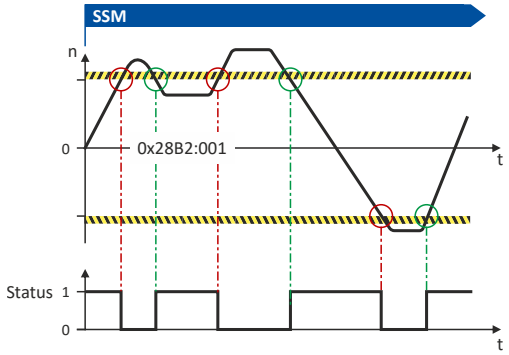

Fig. 68: SSM function

This function monitors the amount of a set speed value. 0x28B2:001

If the speed of the drive is within the monitoring limits, the SSM within limits status is output.

- Status word: 0x2870:002 Bit 5
- Safe output: 0x28B3

Activation of the function

0x28B2:001 > 0 rpm activates the function.

Behavior of the function in the event of an error

If the monitoring limits are exceeded, no error message is output and no error stop is triggered.

Only the SSM within limits status is reset.

Parameter

Address	Name / setting range / [default setting]	Information
0x28B2:001	SSM: Monitored speed • Read only: x rpm	Amount of the monitored speed. Value = 0 rpm deactivates the function. Changes only possible in the +Safety parameter list+.
0x28B3	SSM "SSM within limits" - Output • Read only	Changes only possible in the +Safety parameter list+.
	0 Disabled	
	1 SD-Out1 positive logic	
	2 SD-Out1 negative logic	

18.11 Safely-limited increment (SLI)

This function monitors the amount of a maximum permissible position change.

⚠ DANGER!

Uncontrolled rotation of the motor possible if no safety rated encoder system is used.

Possible consequences: Death or severe injuries

► Use a safety rated encoder system to use this function.

The function cannot be activated if the drive is in the "Safe operating stop (SOS)" state.

Functional description

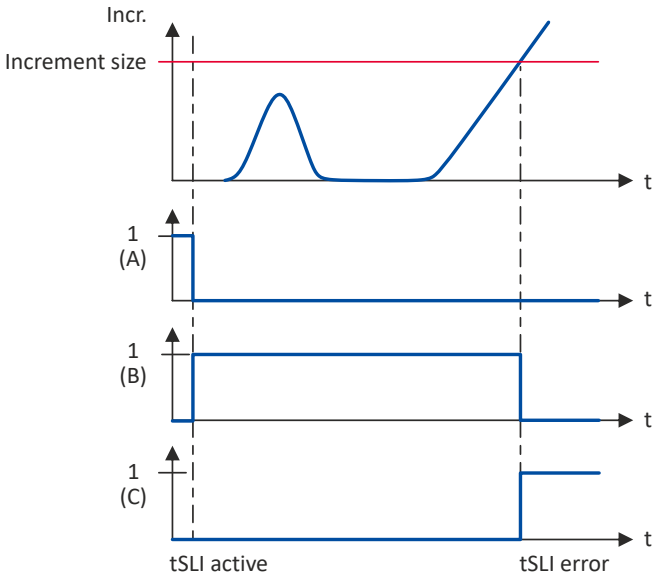

Fig. 69: SLI function

A Triggering the function
B Active monitoring
C Error status

If the drive exceeds the parameterized maximum position change, the set stop function is triggered.

Settings for special operation

- Increment: 0x28CA:003
- Stop function: 0x28A9:001

Settings for normal operation

- Increment: 0x28CA:001
- Stop function: 0x28CA:002

Activation of the function

- Via a safe input.
- Via the safety bus. Safe network interfaces 📖 535
- Via the special operation. ▸ Operation mode selector (OMS) 📖 525

Behavior of the function in the event of an error

If the monitoring limits are exceeded, an error message is output and a parameterizable error stop is triggered.

Normal operation

Selection of error stop: 0x28CA:002

Possible error stops:

- Safe torque off (STO) 📖 477
- Safe stop 1 (SS1) 📖 479
- Safe stop 2 (SS2) 📖 482

Special operation

Selection of error stop: 0x28A9:001

Possible error stops:

- Safe torque off (STO) 📖 477
- Safe stop 1 (SS1) 📖 479
- Safe stop 2 (SS2) 📖 482

Parameter

Address	Name / setting range / [default setting]		Information
0x2875:011	S-Bus control bits: SLI • Read only		Display of the control bit status from the safety bus without filtering and changing the logic.
0x28C8	SLI Source SD-In • Read only		Changes only possible in the +Safety parameter list+.
	0	Disabled	
	1	SD-In1	
	2	SD-In2	
	3	SD-In3	
	4	SD-In4	
0x28C9	SLI Source S-Bus • Read only		Changes only possible in the +Safety parameter list+.
	0	Disabled	
	1	Activated	
0x28CA:001	SLI: Increment size standard operation • Read only: x incr.		Number of increments for a safely limited increment in normal operation. Changes only possible in the +Safety parameter list+.
0x28CA:002	SLI: Error response standard operation • Read only		Changes only possible in the +Safety parameter list+.
	0	STO	
	1	SS1	
	2	SS2	
0x28CA:003	SLI: Increment size special operation • Read only: x incr.		Number of increments for safely limited increment in special operation. Number = 0 deactivates the function. Changes only possible in the +Safety parameter list+.
0x28CA:004	SLI: Maximum change of position • Read only: x incr.		Value of the position change while SLI has been active. The incremental position value is related to the motor encoder.
0x28CB	SLI "SLI active" - Output • Read only		Changes only possible in the +Safety parameter list+.
	0	Disabled	
	1	SD-Out1 positive logic	
	2	SD-Out1 negative logic	

18.12 Safe direction (SDI)

This function monitors the direction of rotation of the motor. A parameterisable tolerance threshold ensures that the drive does not change the permissible direction of rotation. Within the limits parameterised, the drive can rotate in the impermissible direction of rotation.

⚠ DANGER!

Uncontrolled rotation of the motor possible if no safety rated encoder system is used.

Possible consequences: Death or severe injuries

► Use a safety rated encoder system to use this function.

NOTICE

The delay in 0x28BA:002 is parameterised with a value > 0.

Machine parts and parts of the facility can be destroyed if this setting is not taken into consideration for the calculation of the safety distance.

► Only utilise this function if the safety distance has been calculated previously, taking the delay set into consideration.

► Evaluate the "SDIpos observed" or "SDIneg observed" feedback.

Conditions

- The risk analysis must ensure that the delay does not pose any hazard.
- The application leads the drive to the permissible direction of rotation.

Note when you combine the Safely-limited speed (SLS) and Safe direction (SDI) functions.

- The parameterized directions of movement must be coordinated:
  - SLS: 0x28C4:001 ... 0x28C4:004
  - SDI: 0x28BA:001
- SLS braking time and SDI deceleration time must be coordinated:
  - SLS: 0x28C3:001 ... 0x28C3:004
  - SDI: 0x28BA:002
  - The SLS deceleration time starts simultaneously with the SDI deceleration time.

Functional description

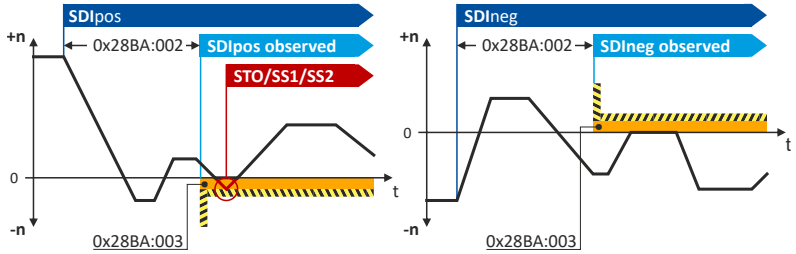

Fig. 70: SDI function

The function monitors the permissible direction of movement of the drive: 0x28BA:001

After requesting the function, the monitoring can be activated with a delay: 0x28BA:002

A tolerance window defines the number of increments that the drive may move in the blocked direction without triggering an error stop: 0x28BA:003

If the direction of movement of the drive is within the monitoring limits, the SDIpos observed or SDIneg observed status is output.

- Status word: 0x2870:002 Bit 6 ... 0x2870:002 Bit 7.
- Safe output: 0x28BB:001 ... 0x28BB:002

Activation of the function

- Via a safe input.
- Via the safety bus. Safe network interfaces 📖 535

Behavior of the function in the event of an error

If the monitoring limits are exceeded, an error message is output and a parameterizable error stop is triggered.

Selection of error stop: 0x28BA:004

Possible error stops:

▸ Safe torque off (STO) 📖 477

▸ Safe stop 1 (SS1) 📖 479

▸ Safe stop 2 (SS2) 📖 482

Parameter

Address	Name / setting range / [default setting]		Information
0x2875:008	S-Bus control bits: SDIpos • Read only		Display of the control bit status from the safety bus without filtering and changing the logic.
0x2875:009	S-Bus control bits: SDIneg • Read only		
0x28B8:001	SDI: SDIpos - Source SD-In • Read only		Changes only possible in the +Safety parameter list+.
	0	Disabled	
	1	SD-In1	
	2	SD-In2	
	3	SD-In3	
	4	SD-In4	
0x28B8:002	SDI: SDIneg - Source SD-In • Read only		Changes only possible in the +Safety parameter list+.
	0	Disabled	
	1	SD-In1	
	2	SD-In2	
	3	SD-In3	
	4	SD-In4	
0x28B9:001	SDI: SDIpos - Source S-Bus • Read only		Changes only possible in the +Safety parameter list+.
	0	Disabled	
	1	Activated	
0x28B9:002	SDI: SDIneg - Source S-Bus • Read only		Changes only possible in the +Safety parameter list+.
	0	Disabled	
	1	Activated	
0x28BA:001	SDI: Monitoring standard operation • Read only		Changes only possible in the +Safety parameter list+.
	0	Both directions enabled	
	1	Positive direction enabled	
	2	Negative direction enabled	
0x28BA:002	SDI: Delay time • Read only: x ms		Safe monitored time from activation to switching on the monitoring SDIpos or SDIneg. Changes only possible in the +Safety parameter list+.
0x28BA:003	SDI: Tolerance threshold • Read only: x incr.		Setting of the tolerance threshold specifying by how many increments the motor may move in the direction locked by SDI. The incremental position value is related to the motor encoder. Changes only possible in the +Safety parameter list+.
0x28BA:004	SDI: Error response • Read only		Changes only possible in the +Safety parameter list+.
	0	STO	
	1	SS1	
	2	SS2	

Address	Name / setting range / [default setting]		Information
0x28BA:005	SDI: Maximum change of position • Read only: x incr.		Maximum occurred position change in the not allowed direction when SDI is active.
0x28BB:001	SDI: "SDIpos observed" - Output • Read only		Changes only possible in the +Safety parameter list+.
	0	Disabled	
	1	SD-Out1 positive logic	
	2	SD-Out1 negative logic	
0x28BB:002	SDI: "SDIneg observed" - Output • Read only		Changes only possible in the +Safety parameter list+.
	0	Disabled	
	1	SD-Out1 positive logic	
	2	SD-Out1 negative logic	

18.13 Safely-limited position (SLP)

This function monitors the lower and upper position limit.

Up to four absolute lower and upper position limits can be parameterized and monitored.

⚠ DANGER!

Uncontrolled rotation of the motor possible if no safety rated encoder system is used.

Possible consequences: Death or severe injuries

► Use a safety rated encoder system to use this function.

Preconditions

Homing must be executed. ▸ Safe homing (SHom) 📖 507

Functional description

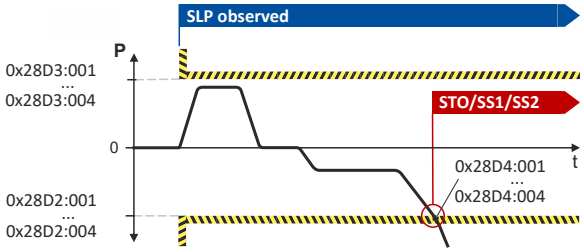

Fig. 71: SLP function

The function monitors the lower and upper position limits of the drive:

- Lower position limit: 0x28D2:001 ... 0x28D2:004
- Upper position limit: 0x28D3:001 ... 0x28D3:004

After requesting the function, the monitoring is active immediately.

If the actual position of the drive is within the monitoring limits, the SLP1 observed ... SLP4 observed status is output.

- Status word: 0x2870:002 Bit 8 ... 0x2870:002 Bit 11.
- Safe output: 0x28D5:001 ... 0x28D5:004

Activation of the function

- Via a safe input.
- Via the safety bus. ▸ Safe network interfaces 📖 535

Behavior of the function in the event of an error

If the monitoring limits are exceeded, an error message is output and a parameterizable error stop is triggered.

Selection of error stop: 0x28D4:001 ... 0x28D4:004

Possible error stops:

▸ Safe torque off (STO) 📖 477

▸ Safe stop 1 (SS1) 📖 479

▸ Safe stop 2 (SS2) 📖 482

Parameter

Address	Name / setting range / [default setting]		Information
0x2875:013	S-Bus control bits: SLP1 • Read only		Display of the control bit status from the safety bus without filtering and changing the logic.
0x2875:014	S-Bus control bits: SLP2 • Read only		
0x2875:015	S-Bus control bits: SLP3 • Read only		
0x2875:016	S-Bus control bits: SLP4 • Read only		
0x28D0:001	SLP: SLP1 - Source SD-In • Read only		Changes only possible in the +Safety parameter list+.
	0	Disabled	
	1	SD-In1	
	2	SD-In2	
	3	SD-In3	
	4	SD-In4	
0x28D0:002	SLP: SLP2 - Source SD-In • Read only		Changes only possible in the +Safety parameter list+.
	0	Disabled	
	1	SD-In1	
	2	SD-In2	
	3	SD-In3	
	4	SD-In4	
0x28D0:003	SLP: SLP3 - Source SD-In • Read only		Changes only possible in the +Safety parameter list+.
	0	Disabled	
	1	SD-In1	
	2	SD-In2	
	3	SD-In3	
	4	SD-In4	
0x28D0:004	SLP: SLP4 - Source SD-In • Read only		Changes only possible in the +Safety parameter list+.
	0	Disabled	
	1	SD-In1	
	2	SD-In2	
	3	SD-In3	
	4	SD-In4	
0x28D1:001	SLP: SLP1 - Source S-Bus • Read only		Changes only possible in the +Safety parameter list+.
	0	Disabled	
	1	Activated	
0x28D1:002	SLP: SLP2 - Source S-Bus • Read only		Changes only possible in the +Safety parameter list+.
	0	Disabled	
	1	Activated	
0x28D1:003	SLP: SLP3 - Source S-Bus • Read only		Changes only possible in the +Safety parameter list+.
	0	Disabled	
	1	Activated	
0x28D1:004	SLP: SLP4 - Source S-Bus • Read only		Changes only possible in the +Safety parameter list+.
	0	Disabled	
	1	Activated	

Address	Name / setting range / [default setting]	Information
0x28D2:001	SLP: SLP1 - Lower position limit • Read only: x incr.	Definition of the lower position limit for monitoring. 1-encoder system The incremental position value is related to the motor encoder. 2-encoder system The incremental position value is related to the load encoder. Changes only possible in the +Safety parameter list+.
0x28D2:002	SLP: SLP2 - Lower position limit • Read only: x incr.	
0x28D2:003	SLP: SLP3 - Lower position limit • Read only: x incr.	
0x28D2:004	SLP: SLP4 - Lower position limit • Read only: x incr.	
0x28D3:001	SLP: SLP1 - Upper position limit • Read only: x incr.	Definition of the upper position limit for monitoring. 1-encoder system The incremental position value is related to the motor encoder. 2-encoder system The incremental position value is related to the load encoder. Changes only possible in the +Safety parameter list+.
0x28D3:002	SLP: SLP2 - Upper position limit • Read only: x incr.	
0x28D3:003	SLP: SLP3 - Upper position limit • Read only: x incr.	
0x28D3:004	SLP: SLP4 - Upper position limit • Read only: x incr.	
0x28D4:001	SLP: SLP1 - Error response • Read only	Changes only possible in the +Safety parameter list+.
	0 STO	
	1 SS1	
	2 SS2	
0x28D4:002	SLP: SLP2 - Error response • Read only	Changes only possible in the +Safety parameter list+.
	0 STO	
	1 SS1	
	2 SS2	
0x28D4:003	SLP: SLP3 - Error response • Read only	Changes only possible in the +Safety parameter list+.
	0 STO	
	1 SS1	
	2 SS2	
0x28D4:004	SLP: SLP4 - Error response • Read only	Changes only possible in the +Safety parameter list+.
	0 STO	
	1 SS1	
	2 SS2	
0x28D5:001	SLP: "SLP1 observed" - Output • Read only	Changes only possible in the +Safety parameter list+.
	0 Disabled	
	1 SD-Out1 positive logic	
	2 SD-Out1 negative logic	
0x28D5:002	SLP: "SLP2 observed" - Output • Read only	Changes only possible in the +Safety parameter list+.
	0 Disabled	
	1 SD-Out1 positive logic	
	2 SD-Out1 negative logic	
0x28D5:003	SLP: "SLP3 observed" - Output • Read only	Changes only possible in the +Safety parameter list+.
	0 Disabled	
	1 SD-Out1 positive logic	
	2 SD-Out1 negative logic	
0x28D5:004	SLP: "SLP4 observed" - Output • Read only	Changes only possible in the +Safety parameter list+.
	0 Disabled	
	1 SD-Out1 positive logic	
	2 SD-Out1 negative logic	

18.14 Safe homing (SHom)

Safety functions based on absolute positions require an absolute reference point to calculate and monitor the position. This reference point is defined via the reference run.

The home position is the absolute reference point for these safety functions:

- Safely-limited position (SLP) 📖 504
- Position-dependent safe speed (PDSS) 📖 516
- Safe cam (SCA) 📖 514

During the reference run, the drive moves exclusively at a safely limited speed that can be parameterized (SLS1 ... SLS4). When the reference position is traversed, the parameterized position value is adopted as the "Home Position".

By parameterization it can be set whether the current position is stored non-volatilely when the voltage supply is switched off. If the restart conditions are fulfilled after the voltage supply is switched on again and after a minimum movement (minireference run), no new reference run is performed.

▸ Mini-homing 📖 511

For the operation of a drive system with slip, consisting of motor encoder and load encoder, the slip between motor encoder and load encoder can be compensated with parameterizable diagnostic positions.

▸ Slip compensation 📖 512

⚠ DANGER!

When switched off, the motor position must not be changed by external forces.

Possible consequences: Death or severe injuries

► Make sure that the motor position does not change.

NOTICE

Undetected local change of the home position.

An unrecognized local change of the home position leads to incorrect values of the absolute position.

► Mount the components for detecting the reference position mechanically so that the home position cannot change due to external influences.

Preconditions

In applications with only one position switch, this switch must be connected in parallel to the inputs X82/IRS and X82/IRL.

Functional description

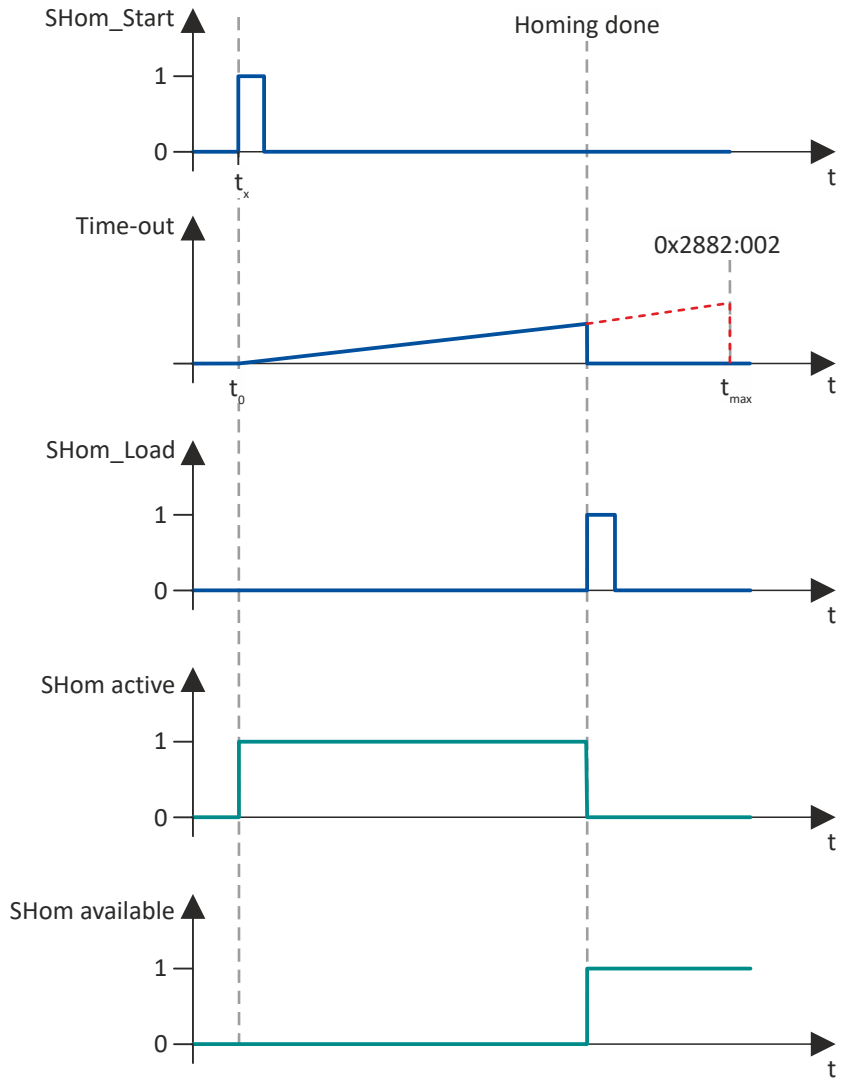

Fig. 72: Sequence of the SHom function

Activation and sequence of the reference run

1. The homing process is started via the defined input source: 0x2880:001
2. The superimposed application must start the reference run. The drive independently takes over the motion control.
3. The reference run is performed with the set safely limited speed (SLS): 0x2882:003
4. Within the defined "Timeout" period, the reference signal "SHom_Load" is expected, which sets the safe reference point "Home Position" in the absolute position range:
   - "Timeout" definition: 0x2882:002
   - Source for "SHom_Load": 0x2881:001
   - "Home Position" reference point: 0x2882:001
5. Once the reference point is set, the reference run is ended.
6. The drive changes to normal operation.

Display of the function status: 0x2882:006

The status is also displayed in the status bits of the safety bus. ▶ Safe network interfaces 📖 535

Behavior of the function in the event of an error

A faulty reference run, e.g. due to a missing signal edge or a violation of the timing requirement, triggers STO.

Parameter

Address	Name / setting range / [default setting]		Information
0x2110:014	Delete home position		
	0	**Ready**	
	1	Start	
	2	In progress	
	3	Action cancelled	
	4	No access	
0x2875:021	S-Bus control bits: SHom_Start • Read only		Display of the control bit status from the safety bus without filtering and changing the logic.
0x2880:001	SHom_Start: Source • Read only		Changes only possible in the +Safety parameter list+.
	0	Disabled	
	13	S-Bus	
	14	IRS	
0x2880:002	SHom_Start: IRS edge trigger • Read only		Changes only possible in the +Safety parameter list+.
	0	Rising edge	
	1	Falling edge	
0x2875:022	S-Bus control bits: SHom_Load • Read only		Display of the control bit status from the safety bus without filtering and changing the logic.
0x2881:001	SHom_Load: Source • Read only		Changes only possible in the +Safety parameter list+.
	13	S-Bus	
	15	IRL	
0x2881:002	SHom_Load: IRL edge trigger • Read only		Changes only possible in the +Safety parameter list+.
	0	Rising edge	
	1	Falling edge	
0x2882:001	SHom: Home position • Read only: x incr.		Setting of the safe home position, which is taken over at SHOM_Load. It is the absolute reference point for the SLP, SCA and PDSS safety functions. 1-encoder system The incremental position value is related to the motor encoder. 2-encoder system The incremental position value is related to the load encoder. Changes only possible in the +Safety parameter list+.
0x2882:002	SHom: Timeout • Read only: x ms		The parameterized home mark must be detected within this monitoring time after SHom_Start. Changes only possible in the +Safety parameter list+.
0x2882:003	SHom: SLS for homing • Read only		Changes only possible in the +Safety parameter list+.
	3	SLS1	
	4	SLS2	
	5	SLS3	
	6	SLS4	
0x2882:004	SHom: Restart condition • Read only		Changes only possible in the +Safety parameter list+.
	0	Homing required	
	1	Load saved reference	
0x2882:005	SHom: Starting position tolerance • Read only: x incr.		Permitted tolerance between the safe position that is saved and the current safe position after restarting. 1-encoder system The incremental position value is related to the motor encoder. 2-encoder system The incremental position value is related to the load encoder. Changes only possible in the +Safety parameter list+.

Address	Name / setting range / [default setting]		Information
0x2882:006	SHom: Status • Read only		
	0	No reference	
	1	SHom active	
	2	SHom available	
	3	Mini-homing active	
0x2882:007	SHom: Saved position • Read only: x incr.		Safe position saved at the last switch-off. 1-encoder system The incremental position value is related to the motor encoder. 2-encoder system The incremental position value is related to the load encoder.
0x2883	SHom Source diagnostic positions • Read only		Changes only possible in the +Safety parameter list+.
	0	Disabled	
	1	SD-In1	
	2	SD-In2	
	3	SD-In3	
	4	SD-In4	
	14	IRS	
	15	IRL	
0x2884:001	SHom: Level diagnostic positions • Read only		Changes only possible in the +Safety parameter list+.
	0	LOW level	
	1	HIGH level	
0x2884:002	SHom: Lower diagnostic position • Read only: x incr.		Setting of the lower SHom diagnostic position. Changes only possible in the +Safety parameter list+.
0x2884:003	SHom: Upper diagnostic position • Read only: x incr.		Setting of the upper SHom diagnostic position. Changes only possible in the +Safety parameter list+.
0x2884:004	SHom: Tolerance diagnostic positions • Read only: x incr.		Setting of the permissible tolerance when traversing the SHom diagnostic positions. Changes only possible in the +Safety parameter list+.
0x2884:005	SHom: Error response diagnostic positions • Read only		Changes only possible in the +Safety parameter list+.
	0	STO	
	1	SS1	
	2	SS2	
0x2884:006	SHom: Current difference diagnostic position • Read only: x incr.		Display of the current difference when passing a SHom diagnostic position.
0x2885:001	SHom: Maximum compensated slip • Read only: x incr.		Setting of the maximum slip compensated per motor revolution. The setting 0 Incr. deactivates the function. Changes only possible in the +Safety parameter list+.
0x2885:002	SHom: End area slip compensation • Read only		Changes only possible in the +Safety parameter list+.
	0	Disabled	
	1	Activated	
0x2886	SHom "SHom active" - Output • Read only		Changes only possible in the +Safety parameter list+.
	0	Disabled	
	1	SD-Out1 positive logic	
	2	SD-Out1 negative logic	
0x2887	SHom "SHom available" - Output • Read only		Changes only possible in the +Safety parameter list+.
	0	Disabled	
	1	SD-Out1 positive logic	
	2	SD-Out1 negative logic	

18.14.1 Mini-homing

The minireference travel is a minimum movement to plausibilize absolute position values. It is performed and safely monitored with the Safely-limited speed (SLS) function. After a successful minireference run, the axis switches to normal operation.

The minireference run can replace the complete reference run in certain operating states:

- After mains switching
- After acknowledgement of an SSI encoder error
  - The short-time interruption of the optical signal triggers the parameterized safety function, which stops the affected axis.
  - Regardless of the triggered error reaction and the associated overtravel, however, the absolute position data continues to be determined on both channels.
- After returning from the repair mode select (RMS). ▸ Repair mode selector (RMS) 🕮 528

Preconditions

- The minireference run is only possible if a complete reference run was performed before the first call.
- The safely limited speed for the reference run must be parameterized. 0x2882:003
- "Load stored reference" is set as a restart condition. 0x2884:004 = 1
- The minimum distance for the minireference run is calculated automatically:

  Minimum distance ≥ 4 x tolerance window for the position comparison 0x287C:001

Functional description

- Operating states in which the minireference run starts automatically:
  - After mains switching
  - After acknowledgement of an SSI encoder error
  - After returning from the repair mode select (RMS)
- Sequence of the plausibility check during the minireference run:
  1. Are the saved position and the current position within the parameterized tolerance window for the starting position? 0x2882:005
  2. Are the position value currently received from the inverter and the internal position value within the parameterized tolerance window for the position comparison? 0x287C:001
  3. If the plausibility check is successful, the status bit "SHom present" is set. 0x2882:006
  4. The drive changes to normal operation.

If complete homing is to be performed via the home position switch despite the "SHom present" status bit being set, the status bit must be reset with the "Clear home position" command. 0x2110:014

Only the status bit is reset via this path. The superimposed application must start the reference run. ▸ Safe homing (SHom) 🕮 507

Behavior of the function in the event of an error

A faulty minireference run triggers STO.

A complete reference run is required.

18.14.2 Slip compensation

If slip between the motor encoder and load encoder is to be expected due to operation, e.g. in the case of a friction wheel drive, the slip can be cyclically evaluated and compensated for by this function.

The function is intended especially for the travel ranges outside the buffer zones. The function leads to a reduction in buffer end areas and serves to improve the availability of the system.

Slip compensation can also be permanently activated independently of a safety function.

It can be deactivated for the areas between the diagnostic positions and the end of the travel path by setting the appropriate parameters.

⚠WARNING!

The slip compensation may not be suitable for the application.

Serious injuries when exceeding the travel path.

► As part of the risk assessment for the machine, make sure that the application is suitable for slip compensation.

► Traverse the diagnostics markers cyclically when using the slip compensation.

► Define a diagnostics interval with the help of the risk assessment. The diagnostics interval must be determined via a master control component.

Preconditions

- It must be ensured that the boundary to the impermissible area A is not crossed.

  Therefore, the buffer end range must be increased by the maximum compensated slip (range B).
- The maximum compensated slip must be parameterized. 0x2885:001 > 0

  This setting activates the slip compensation.
- Upper and lower diagnostic position must be parameterized. 0x2884:002, 0x2884:003

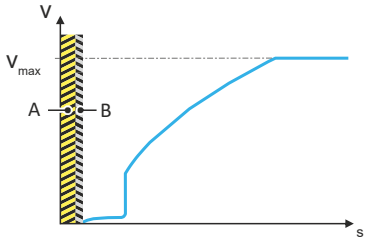

Fig. 73: End zone using the example of the PDSS safety function

A Prohibited area B Buffer end zone

Functional description

- For slip compensation, the diagnostic positions ① and ② are required so that the freedom from error of the load encoder is verified cyclically.
  - To ensure that sufficient braking distance is available in the event of an error, it must be ensured that the diagnostic positions are arranged in such a way that error detection takes place in the range of the maximum permissible speed.
  - The cycle for traversing the diagnostic positions must be controlled by the application. The cycle must be monitored in terms of safety.
- Between the diagnostic positions ① and ②, a cyclic position comparison is performed between the motor encoder and load encoder in each calculation cycle of the safety function.
- The diagnostic positions must be located in front of the buffer areas at the ends of the travel path:

Fig. 74: Position of the diagnostic marks using the example of the PDSS safety function

- When traversing the diagnostic positions, the diagnostic position is compared with the current absolute value encoder position.
- If the difference is outside the parameterized tolerance window, the parameterized error reaction is triggered.
  - Definition of tolerance window: 0x2884:004
  - Definition of error response: 0x2884:005

18.15 Safe cam (SCA)

This function monitors lower and upper position limits.

Up to four absolute lower and upper positions limit values can be parameterized and monitored.

⚠ DANGER!

Uncontrolled rotation of the motor possible if no safety rated encoder system is used.

Possible consequences: Death or severe injuries

► Use a safety rated encoder system to use this function.

NOTICE

The function has no hysteresis.

Possible consequences: The safe output can switch frequently when the speed of the drive is near the monitoring limit.

Mechanical actuators at the safe output could wear out more quickly due to frequent switching.

► In this case, avoid continuous operation at the monitoring limit.

Preconditions

Homing must be executed. ▸ Safe homing (SHom) 🕮 507

Functional description

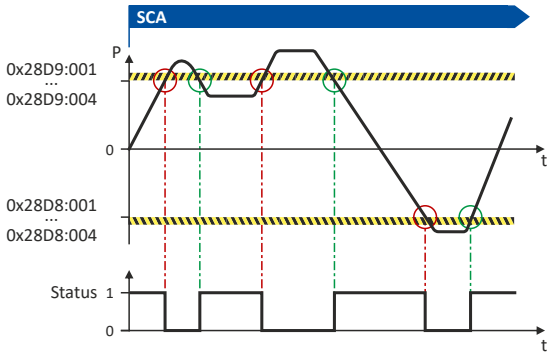

Fig. 75: SCA function

The function compares the current absolute position with the parameterized position limits:

- Lower position limit: 0x28D8:001 ... 0x28D8:004
- Upper position limit: 0x28D9:001 ... 0x28D9:004

If the actual position of the drive is within the monitoring limits, the SCA1 within limits ... SCA4 within limits status is output.

- Status word: 0x2870:002 Bit 12 ... 0x2870:002 Bit15.
- Safe output: 0x28DA:001 ... 0x28DA:004

Activation of the function

0x28D8:001 ... 0x28D8:004/0x28D9:001 ... 0x28D9:004 > 0 incr. activates the function.

Behavior of the function in the event of an error

If the monitoring limits are exceeded, no error message is output and no error stop is triggered.

Only the SCA1 within limits ... SCA4 within limits status is reset.

Parameter

Address	Name / setting range / [default setting]	Information
0x28D8:001	SCA: SCA1 - Lower position limit • Read only: x incr.	Definition of the lower position limit for the function. 1-encoder system The incremental position value is related to the motor encoder. 2-encoder system The incremental position value is related to the load encoder. Changes only possible in the +Safety parameter list+.
0x28D8:002	SCA: SCA2 - Lower position limit • Read only: x incr.	
0x28D8:003	SCA: SCA3 - Lower position limit • Read only: x incr.	
0x28D8:004	SCA: SCA4 - Lower position limit • Read only: x incr.	
0x28D9:001	SCA: SCA1 - Upper position limit • Read only: x incr.	Definition of the upper position limit for the function. 1-encoder system The incremental position value is related to the motor encoder. 2-encoder system The incremental position value is related to the load encoder. Changes only possible in the +Safety parameter list+.
0x28D9:002	SCA: SCA2 - Upper position limit • Read only: x incr.	
0x28D9:003	SCA: SCA3 - Upper position limit • Read only: x incr.	
0x28D9:004	SCA: SCA4 - Upper position limit • Read only: x incr.	
0x28DA:001	SCA: "SCA1 within limits" - Output • Read only	Changes only possible in the +Safety parameter list+.
	0 Disabled	
	1 SD-Out1 positive logic	
	2 SD-Out1 negative logic	
0x28DA:002	SCA: "SCA2 within limits" - Output • Read only	Changes only possible in the +Safety parameter list+.
	0 Disabled	
	1 SD-Out1 positive logic	
	2 SD-Out1 negative logic	
0x28DA:003	SCA: "SCA3 within limits" - Output • Read only	Changes only possible in the +Safety parameter list+.
	0 Disabled	
	1 SD-Out1 positive logic	
	2 SD-Out1 negative logic	
0x28DA:004	SCA: "SCA4 within limits" - Output • Read only	Changes only possible in the +Safety parameter list+.
	0 Disabled	
	1 SD-Out1 positive logic	
	2 SD-Out1 negative logic	

18.16 Position-dependent safe speed (PDSS)

This function monitors the speed of a drive as a function of the absolute position along a motion range.

This enables the use of a physically limited motion range without the use of mechanical buffers and limit switches.

The function can be parameterized as permanently active.

⚠ DANGER!

Uncontrolled rotation of the motor possible if no safety rated encoder system is used.

Possible consequences: Death or severe injuries

► Use a safety rated encoder system to use this function.

⚠ WARNING!

When using the slip compensation: The slip compensation may not be suitable for the application.

Serious injuries when exceeding the travel path.

► As part of the risk assessment for the machine, make sure that the application is suitable for slip compensation.

► Traverse the diagnostics markers cyclically when using the slip compensation.

► Define a diagnostics interval with the help of the risk assessment. The diagnostics interval must be determined via an upstream control component.

In connection with this function, please also note the information on slip compensation and safe homing:

▸ Slip compensation 📖 512

▸ Safe homing (SHom) 📖 507

The distance of the position limit (0x28DE:002) to the forbidden zone must be selected so large, taking into account all parameterized tolerances, that the drive cannot collide with the forbidden zone under any circumstances.

Preconditions

Homing must be executed. ▸ Safe homing (SHom) 📖 507

Functional description

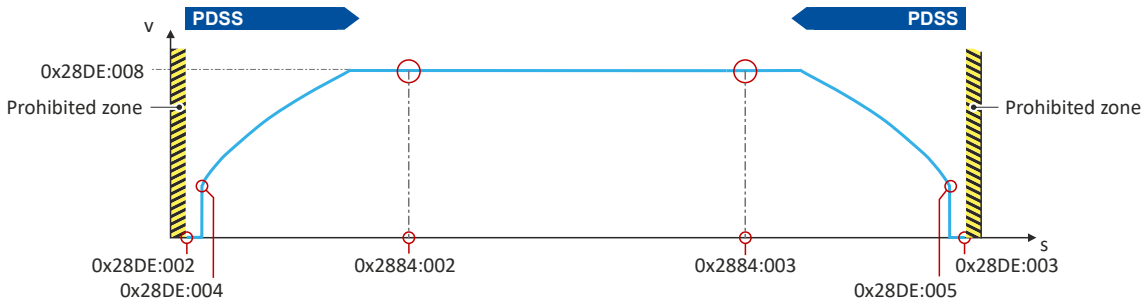

Fig. 76: PDSS function

It depends on the application whether the drive can directly travel to the position limit (0x28DE:002) with the limited speed v_{max} (0x28DE:008). There could be a risk of exceeding the position limit.

Therefore, a safe creep speed (SCS) can additionally be parameterized to slowly approach the position limit.

SCS can be set separately for the lower and upper position limits:

- SCS for lower position limit
  - Value for SCS: 0x28DE:006
  - Starting position for SCS: 0x28DE:004
- SCS for upper position limit
  - Value for SCS: 0x28DE:007
  - Starting position for SCS: 0x28DE:005

Approaching the position limit with v_{max}	Approaching the position limit with safe creep speed (SCS)
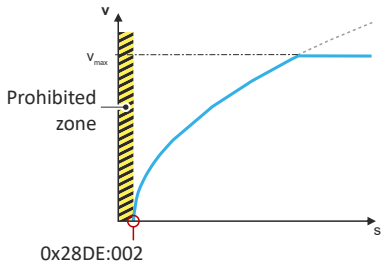	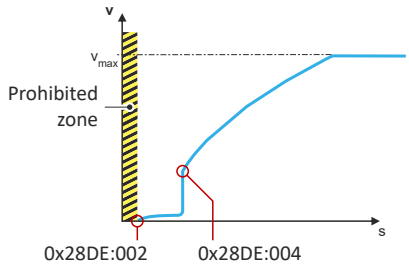

If the motion control of the drive is within the monitoring limits, the PDSS positive observed ... PDSS negative observed status is output.

- Status word: 0x2870:002 Bit 16 ... 0x2870:002 Bit17.
- Safe output: 0x28DF ... 0x28E0

Activation of the function

- Via a safe input.
- Via the safety bus. ▸ Safe network interfaces 🕮 535

Error behavior

If the monitoring limits are exceeded, an error message is output and a parameterizable error stop is triggered.

Selection of error stop: 0x28DE:011

Possible error stops:

▸ Safe torque off (STO) 🕮 477

▸ Safe stop 1 (SS1) 🕮 479

▸ Safe stop 2 (SS2) 🕮 482

Parameter

Address	Name / setting range / [default setting]		Information
0x2875:023	S-Bus control bits: PDSS • Read only		Display of the control bit status from the safety bus without filtering and changing the logic.
0x28DC	PDSS Source SD-In • Read only		Changes only possible in the +Safety parameter list+.
	0	Disabled	
	1	SD-In1	
	2	SD-In2	
	3	SD-In3	
	4	SD-In4	
0x28DD	PDSS Source S-Bus • Read only		Changes only possible in the +Safety parameter list+.
	0	Disabled	
	1	Activated	

Address	Name / setting range / [default setting]	Information
0x28DE:001	PDSS: Permanent activation • Read only	Selection of how the function is activated. Changes only possible in the +Safety parameter list+.
	0 On demand	On request via defined source.
	1 Activated	Permanent activation
0x28DE:002	PDSS: Lower position limit • Read only: x incr.	Definition of the lower position limit for the function. 1-encoder system The incremental position value is related to the motor encoder. 2-encoder system The incremental position value is related to the load encoder. Changes only possible in the +Safety parameter list+.
0x28DE:003	PDSS: Upper position limit • Read only: x incr.	Definition of the upper position limit for the function. 1-encoder system The incremental position value is related to the motor encoder. 2-encoder system The incremental position value is related to the load encoder. Changes only possible in the +Safety parameter list+.
0x28DE:004	PDSS: Lower SCS limit • Read only: x incr.	Lower SCS limit for PDSS. Value less than or equal to the lower position limit deactivates the function. 1-encoder system The incremental position value is related to the motor encoder. 2-encoder system The incremental position value is related to the load encoder. Changes only possible in the +Safety parameter list+.
0x28DE:005	PDSS: Upper SCS limit • Read only: x incr.	Upper SCS limit for PDSS. Value less than or equal to the upper position limit deactivates the function. 1-encoder system The incremental position value is related to the motor encoder. 2-encoder system The incremental position value is related to the load encoder. Changes only possible in the +Safety parameter list+.
0x28DE:006	PDSS: SCS from lower limit • Read only: x rpm	Safe creeping speed from the lower SCS limit onwards in the direction of the lower position limit. Changes only possible in the +Safety parameter list+.
0x28DE:007	PDSS: SCS from upper limit • Read only: x rpm	Safe creeping speed from the upper SCS limit onwards in the direction of the upper position limit. Changes only possible in the +Safety parameter list+.
0x28DE:008	PDSS: Maximum speed • Read only: x rpm	Value of the maximum permissible speed for the function. Changes only possible in the +Safety parameter list+.
0x28DE:009	PDSS: Maximum deceleration lower limit • Read only	Amount of the maximum deceleration in the direction of the lower position limit. Changes only possible in the +Safety parameter list+.
0x28DE:010	PDSS: Maximum deceleration upper limit • Read only	Amount of the maximum deceleration in the direction of the upper position limit. Changes only possible in the +Safety parameter list+.
0x28DE:011	PDSS: Error response • Read only	Changes only possible in the +Safety parameter list+.
	0 STO	
	1 SS1	
	2 SS2	
0x28DE:012	PDSS: Currently monitored speed • Read only: x rpm	Display of the currently monitored speed.
0x28DE:013	PDSS: Minimum difference monitored speed • Read only: x rpm	Minimum difference between actual speed and monitored envelope curve.
0x28DF	PDSS "PDSSpos observed" - Output • Read only	Changes only possible in the +Safety parameter list+.
	0 Disabled	
	1 SD-Out1 positive logic	
	2 SD-Out1 negative logic	

Address	Name / setting range / [default setting]		Information
0x28E0	PDSS "PDSSneg observed" - Output • Read only		Changes only possible in the +Safety parameter list+.
	0	Disabled	
	1	SD-Out1 positive logic	
	2	SD-Out1 negative logic	

18.17 Safe brake control (SBC)

(From standard device firmware V1.3, safety firmware V1.1 with parameter set version V1.1)

This function provides for a safe brake control by the inverter.

⚠ DANGER!

Use of non-safety-rated brakes

Possible consequences: Death or severe injuries

► Only use safety-rated brakes with suitable safety-related parameters according to EN ISO 13849-1 and/or EN 62061or EN IEC 61508.

The internal test rate of the brake output (X106) restricts the request rate to max. 1 brake request/10 seconds.

Depending on the application test rate of the connected brake to be released you must reduce the request rate accordingly.

Conditions

- The brake is connected to X106.
- Brake function and monitoring of the brake control are controlled via X106.
- Parameter 0x2820:023 and 0x2820:005:
  - Both parameters must be set to "0".
  - Other settings are not compatible with the SBC function.

    The warning "Incompatible SBC device configuration - 0x6187" is output.

    STO stop function is activated.

Functional description

Control of the SBC function without time delay	Control of the SBC function with time delay

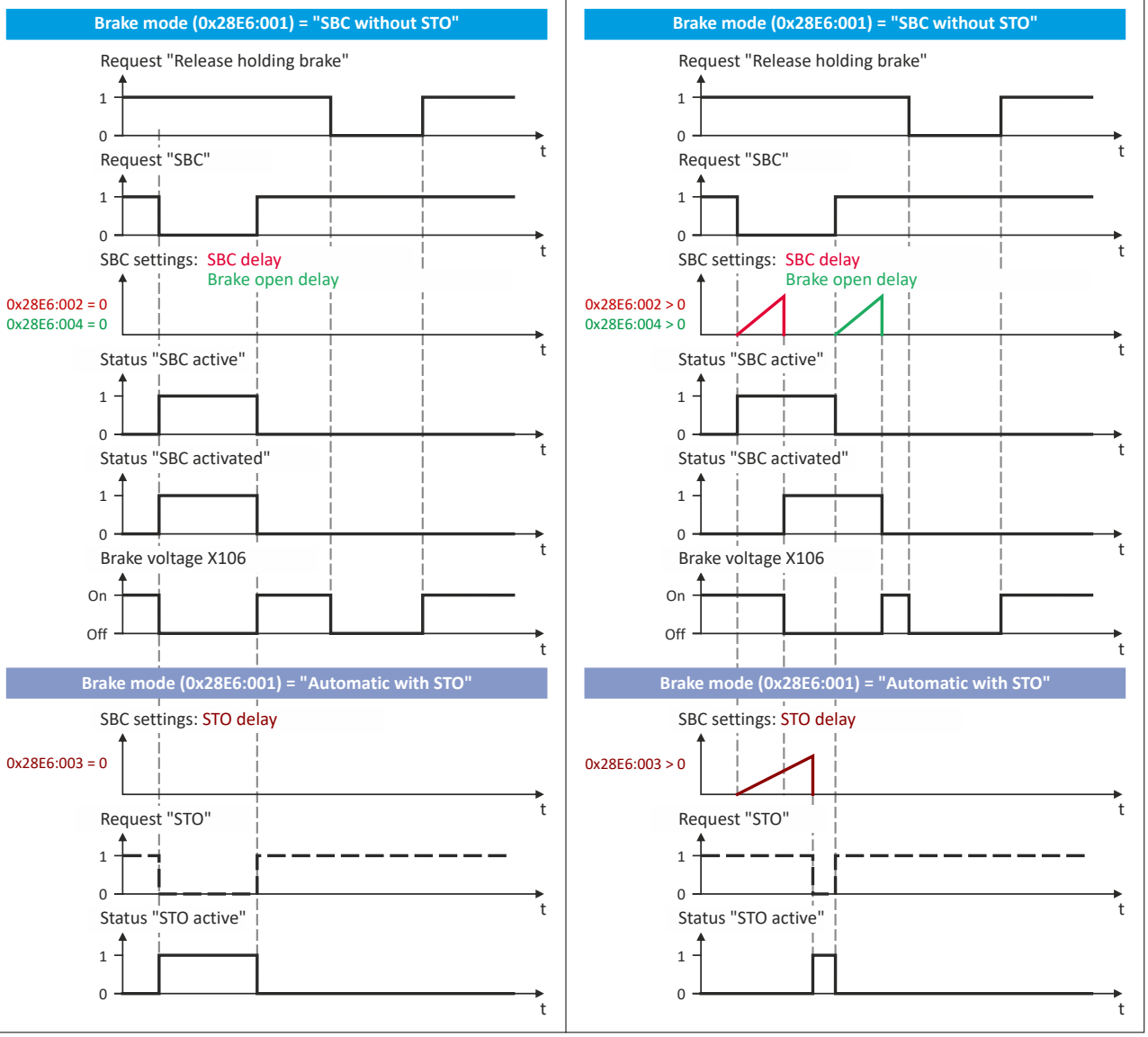

Activation of the function

- Via a safe input.
- Via the safety bus. ▸ Safe network interfaces 🕮 535

Response of the function in the event of an error

If an error is detected, the brake control is switched off.

In the "SBC without STO" mode (0x28E6:001 = 1), no stop function is activated in the event of an error.

Parameter

Address	Name / setting range / [default setting]	Information
0x2875:026	S-Bus control bits: SBC • Read only	Display of the control bit status from the safety bus without filtering and changing the logic.

Address	Name / setting range / [default setting]		Information
0x28E4	SBC Source SD-In • Read only		Changes only possible in the +Safety parameter list+.
	0	Disabled	
	1	SD-In1	
	2	SD-In2	
	3	SD-In3	
	4	SD-In4	
0x28E5	SBC Source S-Bus • Read only		Changes only possible in the +Safety parameter list+.
	0	Disabled	
	1	Activated	
0x28E6:001	SBC: Brake mode • Read only		Changes only possible in the +Safety parameter list+.
	1	SBC without STO	
	2	Automatic with STO	
0x28E6:002	SBC: Delay SBC • Read only: x ms		Time between SBC request and activation of the brake output. Changes only possible in the +Safety parameter list+.
0x28E6:003	SBC: Delay STO • Read only: x ms		Time between SBC request and activation of STO in automatic mode. Changes only possible in the +Safety parameter list+.
0x28E6:004	SBC: Brake open delay • Read only: x ms		Time between SBC deactivation and brake opening. Changes only possible in the +Safety parameter list+.
0x28E7:001	SBC: "SBC active" - Output • Read only		Changes only possible in the +Safety parameter list+.
	0	Disabled	
	1	SD-Out1 positive logic	
	2	SD-Out1 negative logic	
0x28E7:002	SBC: "SBC activated" - Output • Read only		Changes only possible in the +Safety parameter list+.
	0	Disabled	
	1	SD-Out1 positive logic	
	2	SD-Out1 negative logic	

18.18 STO cascading (CAS)

This function allows for the synchronised shutdown of an entire drive network.

Preconditions

- Input SD-In4 must be parameterized in 0x2124 as source for requesting cascading.
- A value ≤ 10 ms must be parameterized for SD-In4 as the active input for the "Emergency Stop" function and the input delay.
- The function "Safe stop emergency (SSE)" must be parameterized in Safe torque off (STO) as the stop function to be executed.
- As restart behavior of the drive after executing the function "Safe torque off (STO)", "Acknowledged restart" must be parameterized in 0x2892:001.
- The control of the output SD-OUT1 via a parameterized safety bus must be locked. ▸ Safe network interfaces 🕮 535

The plausibility check rejects wrong settings until the function is correctly parameterized.

- When using the cascading safety function in connection with a special operation, "SS2" must be parameterized as stop function in operating mode selector switch (OMS).

The stop function STO will trigger the "Cascading" function. Confirmation with the enable switch (ES) is not possible.

Description of the principle

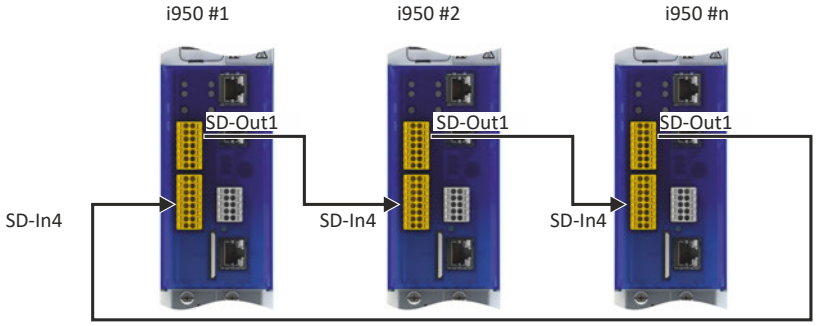

Fig. 77: CAS function

With 0x2125:001, the time period is shown, which elapses from switching the SD-Out1 output to the OFF state to recording the OFF state at the SD-In4 input.

- If, after a stop, the time period "0 ms" is shown, another safety function has triggered the stop via the cascade.
- The time period is shown until the next system acknowledgement takes place.

Activation of the function

The function is activated by parameterisation of the SD-In4 input as source for a cascading request in 0x2124.

Parameter

Address	Name / setting range / [default setting]	Information
0x2124	CAS Source SD-In • Read only	Changes only possible in the +Safety parameter list+.
	0 Disabled	
	4 SD-In4	
0x211A:004	SD-In: SD-In4 input delay • Read only: x ms	Delay time between the detection of the signal change at the safe input and the effective evaluation of the input signal. Changes only possible in the +Safety parameter list+.

Address	Name / setting range / [default setting]	Information
0x2125:001	CAS: Stop delay • Read only: x ms	Delay between setting and receiving the stop signal via cascading. • 0 ms = Another safety function has triggered the stop via the cascade. • The time is reset when acknowledged.

18.19 Operation mode selector (OMS)

This function can be used to switch between normal operation and special operation of the drive.

The special operation makes it possible to override a normal stop (STO, SS1, SS2) by enabling it via the enable switch (ES). The "emergency stop" function also has the highest priority in special operation.

For special operation, the motion function SLS and the monitoring function SLI can be parameterized separately.

If the monitoring function SMS is active, special operation is also monitored.

⚠ DANGER!

When returning to normal operation, the automatic restart is not permissible.

Possible consequence: Death or severe injuries

► Parameterize the acknowledged restart.

Preconditions

- A source for activating the function must be configured. 0x28A8
  - Only one safe input or the safety bus can be configured as a source.
  - If a safe input is configured as a source, 0x28A9:003 Function at low level must be selected carefully, since according to the closed-circuit principle, no additional danger may emanate from normal operation or special operation.
- A source for the ES enable switch must be configured. 0x28AE
- A stop function for special operation must be configured. 0x28A9:001
- A motion function for special operation must be configured. 0x28A9:002
- If the movement is to be monitored in special operation, theSLI and SMS functions can be activated for this purpose.
  - SLI: 0x28CA:003
  - SMS: 0x28B0:001 > 0 rpm

The plausibility check rejects ambiguous settings until they are parameterised correctly.

Functional description

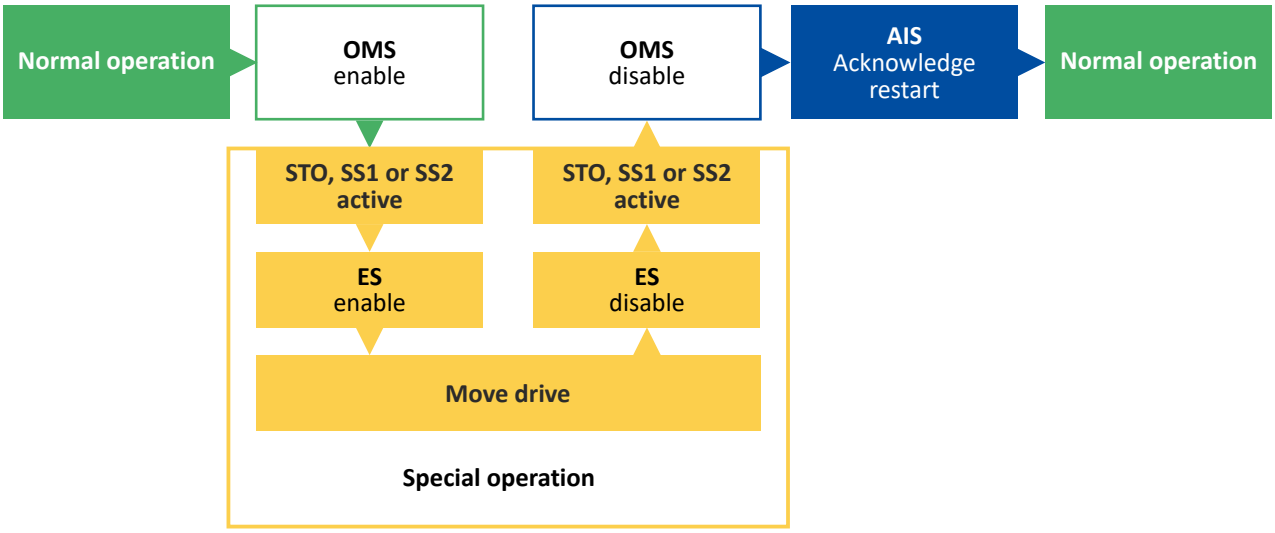

Fig. 78: OMS function

Sequence of the special operation

1. Activate OMS via the configured trigger source.
   The stop function configured for OMS is activated.
2. Activate the enable switch ES via the configured trigger source.
   The stop function is now overruled.
3. The drive can be moved with the configured motion function.
   If monitoring functions are activated, the movement is monitored.
4. When the action is complete, deactivate the ES enable switch.
   The drive can no longer be moved.
   The stop function configured for OMS is activated.
5. Deactivate the trigger source for OMS.
   The special operation is finished.
6. The drive waits for the restart to be acknowledged.
7. Acknowledge the restart via terminal AIS or the safety bus.

The drive changes to normal operation.

Behavior of the function in the event of an error

Activation of OMS via a safe input

- In case of a wire breakage at the safe input when OMS is activated via a HIGH signal:
  - OMS is deactivated.
  - The drive changes to normal operation. No stop function is triggered.
- In the event of an error at the safe input (e.g. discrepancy error):
  - OMS is deactivated.
  - The "ERR" LED is blinking.
  - The drive changes to normal operation. No stop function is triggered.
  - Once the error has been corrected and acknowledged, the special operation can be reactivated.

Activation of OMS via the safety bus

- In case of failure of safe communication:
  - OMS is deactivated.
  - The drive changes to normal operation. No stop function is triggered.

Error when executing the movement function

- When a parameterized monitoring responds:
  - The parameterized stop function for special operation is triggered.
  - The drive does not change to normal operation.

Parameter

Address	Name / setting range / [default setting]		Information
0x2875:012	S-Bus control bits: OMS • Read only		Display of the control bit status from the safety bus without filtering and changing the logic.
0x28A8	OMS Source • Read only		Changes only possible in the +Safety parameter list+.
	0	Disabled	
	1	SD-In1	
	2	SD-In2	
	3	SD-In3	
	4	SD-In4	
	13	S-Bus	
0x28A9:001	OMS: Stop function • Read only		Changes only possible in the +Safety parameter list+.
	0	STO	
	1	SS1	
	2	SS2	
0x28A9:002	OMS: Motion function • Read only		Changes only possible in the +Safety parameter list+.
	3	SLS1	
	4	SLS2	
	5	SLS3	
	6	SLS4	
	11	Free mode	
0x28A9:003	OMS: Function at low level • Read only		Changes only possible in the +Safety parameter list+.
	0	Normal operation	
	1	Special operation	
0x28AA	OMS "OMS active" - Output • Read only		Changes only possible in the +Safety parameter list+.
	0	Disabled	
	1	SD-Out1 positive logic	
	2	SD-Out1 negative logic	
0x28CA:003	SLI: Increment size special operation • Read only: x incr.		Number of increments for safely limited increment in special operation. Number = 0 deactivates the function. Changes only possible in the +Safety parameter list+.

18.20 Repair mode selector (RMS)

This function moves the drive from a situation that is blocking it ("Deadlock").

Example: If an encoder fails, the drive must be moved to a position where it can be repaired.

The connected encoders are not evaluated safety-related.

Only the stop functions configurable for RMS and the enable switch ES are enabled. All other safety functions are disabled.

⚠ DANGER!

Unexpected motions with unexpected speed.

Violation of the permissible movement limits.

Possible consequences: Death or severe injuries

► Use RMS exclusively to free an axis from a "deadlock".

► If necessary, take additional safety measures to ensure that no persons can be endangered, since all monitoring functions are deactivated except for the ES enable switch.

► Use other functions to move the drive when it is not in a "deadlock"!

⚠ DANGER!

When returning to normal operation, the automatic restart is not permissible.

Possible consequences: Death or severe injuries

► Parameterize the acknowledged restart.

Preconditions

- A source for activating the function must be configured. 0x28AB
- A source for the ES enable switch must be configured. 0x28AE
- A stop function for RMS must be configured. 0x28AC:001

The plausibility check rejects ambiguous settings until they are parameterised correctly.

Functional description

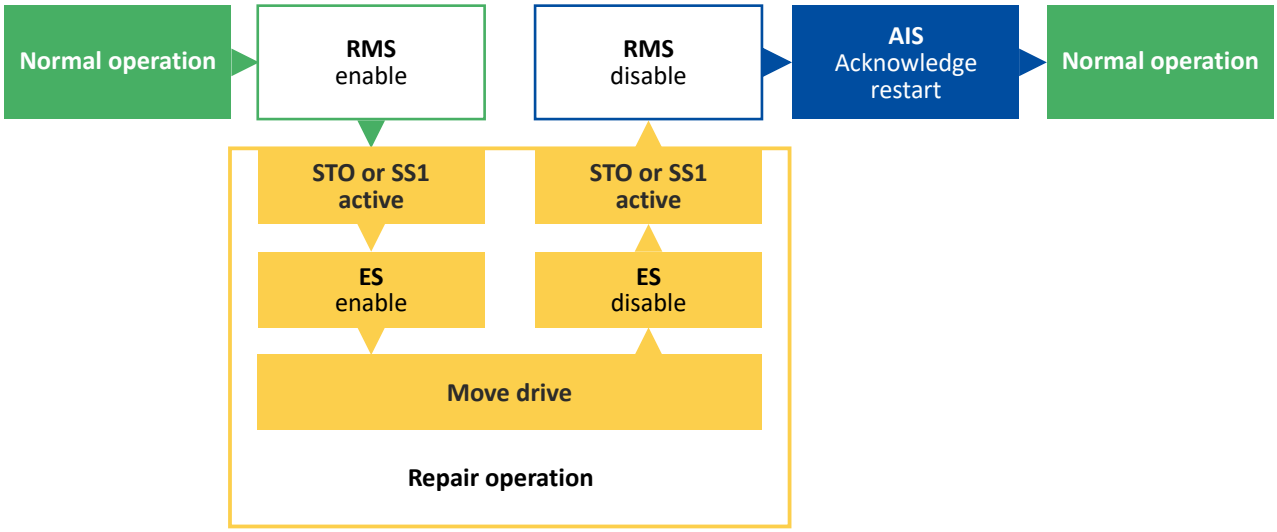

Fig. 79: RMS function

Repair operation procedure

1. Activate RMS via the configured trigger source.
   The stop function configured for RMS is activated.
   Speed functions and absolute position functions are deactivated.
   The SHom status is reset.
2. Activate the enable switch ES via the configured trigger source.
   The stop function is now overruled.
3. The drive can now be released from the "deadlock".
4. When the action is complete, deactivate the ES enable switch.
   The drive can no longer be moved.
   The stop function configured for RMS is activated.
5. Deactivate the trigger source for RMS.
   The encoder evaluation is switched active again.
   The repair mode is finished.
6. The minireference run starts automatically.
7. After a successful minireference run, the drive waits for the restart to be acknowledged.
8. Acknowledge the restart with the signal AIS.
   The drive changes to normal operation.

Activation of the function

- Via a safe input.
- Via the safety bus. ▸ Safe network interfaces 🕮 535

Behavior of the function in the event of an error

A faulty mini reference run triggers STO.

A complete reference run is required. ▸ Safe homing (SHom) 🕮 507

After completion of the complete reference run, the drive switches to normal operation.

Parameter

Address	Name / setting range / [default setting]	Information
0x2875:020	S-Bus control bits: RMS • Read only	Display of the control bit status from the safety bus without filtering and changing the logic.

Address	Name / setting range / [default setting]		Information
0x28AB	RMS Source • Read only		Changes only possible in the +Safety parameter list+.
	0	Disabled	
	1	SD-In1	
	2	SD-In2	
	3	SD-In3	
	4	SD-In4	
	13	S-Bus	
0x28AD	RMS "RMS active" - Output • Read only		Changes only possible in the +Safety parameter list+.
	0	Disabled	
	1	SD-Out1 positive logic	
	2	SD-Out1 negative logic	
0x28AC:001	RMS: Stop function • Read only		Changes only possible in the +Safety parameter list+.
	0	STO	
	1	SS1	

18.21 Enable switch (ES)

This function makes it possible to override the normal stop functions in special operation.

- Safe torque off (STO)
- Safe stop 1 (SS1)
- Safe stop 2 (SS2)

Preconditions

A source for activating the function must be configured. 0x28AE

Special operation must be configured and activated.

- Operation mode selector (OMS)
- Repair mode selector (RMS)

The plausibility check rejects ambiguous settings until they are parameterised correctly.

Functional description

The enable switch overrides the stop function active in special mode. The stop function is deactivated without delay.

The drive can then be moved freely as long as the enable switch is active.

If the enable switch is deactivated, the stop function for special operation is activated again without delay.

Activation of the function

- Via a safe input.
- Via the safety bus. ▸ Safe network interfaces 535

Parameter

Address	Name / setting range / [default setting]		Information
0x2875:010	S-Bus control bits: ES • Read only		Display of the control bit status from the safety bus without filtering and changing the logic.
0x28AE	ES Source • Read only		Changes only possible in the +Safety parameter list+.
	0	Disabled	
	1	SD-In1	
	2	SD-In2	
	3	SD-In3	
	4	SD-In4	
	13	S-Bus	
0x28AF	ES "ES active" - Output • Read only		Changes only possible in the +Safety parameter list+.
	0	Disabled	
	1	SD-Out1 positive logic	
	2	SD-Out1 negative logic	

18.22 Safe Muting (MUT)

(From standard device firmware V1.3, safety firmware V1.1 with parameter set version V1.1)

This function deactivates selected safe inputs and all functions of the safety bus.

"Safe Muting" is used to move the drive even if the inverter is in a safety state.

The function may only be used during commissioning or for maintenance work.

The function is active for a maximum of 30 minutes. It can be ended at any time.

⚠ DANGER!

Activating the Safe Muting function deactivates safety functions!

Possible consequences: Death or severe injuries

► Only authorized personnel may activate the Safe Muting function.

► An emergency stop switch-off must be present that cannot be deactivated by Safe Muting.

Preconditions:

To activate the Safe Muting function, you need:

- A PC with »EASY Starter« (1.16 or higher) or »PLC Designer« with LSPE (Lenze Safety Parameter Editor).
- A permanent communication link between LSPE and inverter.

In a network, the Safe Muting function can only be activated for one inverter at a time.

If the connection is disconnected during Safe Muting, Safe Muting is aborted immediately with an error message. The inverter switches to monitored operation, in which all safety functions are active again.

- The muting password was assigned via the password dialog in the LSPE.
- A safe parameter set containing the settings for safe muting has been transferred to the inverter and activated:
  - The sources to be hidden. 0x213A
  - The muting password. 0x213B:001

Activation of the function

How to activate Safe Muting:

1. »EASY Starter«:Open the **+Safety parameter list+** tab.

   »PLC Designer«:Open the **Safe parameter set** object under the axis in the device tree.
2. Click muting dialog.

   The password dialog opens.
3. Enter muting password.

   The muting dialog opens.
4. Use the displayed data to ensure that the correct inverter has been selected.

   Optical device identification is activated automatically. The two LEDs "RDY" and "ERR" on the front of the selected inverter flash quickly.
5. **Start** activates the function.

   The function is now active for a maximum of 30 minutes.

The remaining time is displayed in 0x213B:002

6. End function

   a) The function is automatically ended after 30 minutes.

   b) **Stop** ends the function manually.

   Monitored operation is reactivated immediately.

   All previously deactivated safety functions are active again.

Behavior of the function in the event of an error

If the Safe Muting function is aborted by an error, the monitored operation is immediately reactivated.

All previously deactivated safety functions are active again.

Reset muting password

The muting password can be reset in the LSPE: 0x213B:001 (MUT:Password) = 0.

Parameter

Address	Name / setting range / [default setting]		Information
0x2110:015	Activate muting		
	0	**Ready**	
	1	Start	
	2	In progress	
	3	Action cancelled	
	4	No access	

Address	Name / setting range / [default setting]		Information
0x213A:001	MUT: Mute S-Bus • Read only		Changes only possible in the +Safety parameter list+.
	0	No muting	
	3	Mute completely	
0x213A:002	MUT: Mute SD-In1 • Read only		
	0	No muting	
	1	Mute	
0x213A:003	MUT: Mute SD-In2 • Read only		
	0	No muting	
	1	Mute	
0x213A:004	MUT: Mute SD-In3 • Read only		
	0	No muting	
	1	Mute	
0x213A:005	MUT: Mute SD-In4 • Read only		
	0	No muting	
	1	Mute	
0x213B:001	MUT: Password • Read only		Password to activate the function. Enter "0" to reset the password. Changes only possible in the +Safety parameter list+.
0x213B:002	MUT: Remaining time • Read only: x s		Remaining time until the function is automatically terminated. The function is active for a maximum of 30 minutes.
0x213C	MUT "MUT active" - Output • Read only		Changes only possible in the +Safety parameter list+.
	0	Disabled	
	1	SD-Out1 positive logic	
	2	SD-Out1 negative logic	

18.23 Safe network interfaces

Parameter

Address	Name / setting range / [default setting]		Information
0x2128	S-Bus configuration • Read only		Changes only possible in the +Safety parameter list+.
	0	No safety bus	
	4	PROFIsafe/PROFINET 8 words	
	10	FSoE/EtherCAT fieldbus	
	11	FSoE/onboard EtherCAT	

18.23.1 PROFIsafe connection

PROFIsafe is the certified safety protocol for the transmission of safety-related data via PROFINET®.

The function supports the transfer of secure information via the PROFIsafe protocol according to the specification "PROFIsafe Profile for Safety Technology", Version 2.0, of the PROFIBUS user organization (PNO). The inverter forwards the PROFIsafe information to the function for secure evaluation.

Operation with PROFIsafe via PROFINET is only permitted according to the specification PROFIsafe Profile for Safety Technology Version 2.x!

Addressing

In order to ensure that a data telegram reaches the right node, a unique PROFIsafe destination address is necessary. If PROFIsafe has been chosen as the safety bus, the safety address will be used as the PROFIsafe destination address. This address must match the corresponding configuration of the safety PLC.

PROFIsafe Frame

The PROFIsafe data is transmitted in the second slot of a PROFINET data telegram. This must be taken into account during the hardware configuration of the safety PLC.

PROFINET data telegram			
Header	**Slot 1**	**Slot 2**	**Trailer**
	Data	PROFIsafe data	

PROFIsafe data

In the PROFIsafe data, a bit is used to control a safety function. The structure of the PROFIsafe data is described in the PROFIsafe profile. The length of the PROFIsafe data (or PROFIsafe message) is 16 bytes.

PROFIsafe message V2 mode								
	Bit offset							
Byte offset	**7**	**6**	**5**	**4**	**3**	**2**	**1**	**0**
0...11	PROFIsafe process data (PROFIsafe output data/PROFIsafe input data)							
12	Control byte or status byte							
13...15	CRC2 Signature from PROFIsafe process data, the PROFIsafe parameters and the running numbers.							

The meaning of the PROFIsafe process data is described separately in the following chapters according to PROFIsafe output data and PROFIsafe input data.

PROFIsafe output data

The PROFIsafe output data (control data) is transmitted from the control.

The "S bus: display control data" parameter (0x2874) displays the control data.

If not stated otherwise in the table, the functions are LOW active, i. e. the bit state "0" activates the respective function.

	Bit offset							
Byte offset	**Bit 7**	**Bit 6**	**Bit 5**	**Bit 4**	**Bit 3**	**Bit 2**	**Bit 1**	**Bit 0**
Byte 0	SDIpos	SLS4	SLS3	SLS2	SLS1	SS2	SS1	STO
Byte 1	SLP4	SLP3	SLP2	SLP1	OMS (HIGH active)	SLI	ES (HIGH active)	SDIneg
Byte 2	SSE	PDSS	SHOM Load (0↗1)	SHOM Start (0↗1)	RMS (HIGH active)	SOS	AIE (0↗1)	AIS (0↗1)
Byte 3	-	-	-	-	-	-	SBC	SD-Out1 (HIGH active)
Byte 4	-	-	-	-	-	-	-	-
Byte 5	-	-	-	-	-	-	-	-
Byte 6	-	-	-	-	-	-	-	-
Byte 7	-	-	-	-	-	-	-	-
Byte 8	-	-	-	-	-	-	-	-
Byte 9	-	-	-	-	-	-	-	-
Byte 10	-	-	-	-	-	-	-	-
Byte 11	-	-	-	-	-	-	-	-
Byte 12	Status byte							
Byte 13	CRC2 (consecutive number)							
Byte 14								
Byte 15								

PROFIsafe input data

The PROFIsafe input data (status information) is transmitted to the control.

The status information is HIGH active.

	Bit offset							
Byte offset	**Bit 7**	**Bit 6**	**Bit 5**	**Bit 4**	**Bit 3**	**Bit 2**	**Bit 1**	**Bit 0**
Byte 0	SDIpos active	SLS4 active	SLS3 active	SLS2 active	SLS1 active	SS2 active	SS1 active	STO active
Byte 1	SLP4 monitored	SLP3 monitored	SLP2 monitored	SLP1 monitored	SOS active*	SLI active	ES active	SDIneg active
Byte 2	SSE active	SDIneg monitored	SDIpos monitored	SLS4 monitored	SLS3 monitored	SLS2 monitored	SLS1 monitored	SOS monitored
Byte 3	Fault active	SMS monitored	OMS active	RMS active	SD-In4	SD-In3	SD-In2	SD-In1
Byte 4	SCA4 within the limits	SCA3 within the limits	SCA2 within the limits	SCA1 within the limits	PDSSneg monitored	PDSSpos monitored	SHOM available	SHOM active
Byte 5	MUT active	SBC activated	SBC active	SD-Out1	Positive direction of movement	n=0	Safe speed OK	SSM within the limits
Byte 6	n safe, byte 0							
Byte 7	n safe, byte 1							
Byte 8	p safe, byte 0							
Byte 9	p safe, byte 1							
Byte 10	p safe, byte 2							
Byte 11	p safe, byte 3							
Byte 12	Status byte							
Byte 13	CRC2 (consecutive number)							
Byte 14								
Byte 15								

Parameter

Address	Name / setting range / [default setting]		Information
0x212A:002	S-Bus: PROFIsafe status • Read only		
	0	Init	
	1	Param	
	2	Data_Exchange	
	3	Data_Exchange_Passivated	
	4	Data_Exchange_Fault	
	5	Hardware_Failure	
0x212A:003	S-Bus: PROFIsafe status byte • Read only		
	Bit 0	iPar_OK	
	Bit 1	Device_Fault/ChF_Ack_Req	
	Bit 2	CE_CRC	
	Bit 3	WD_timeout	
	Bit 4	FV_activated	
	Bit 5	Toggle_d	
	Bit 6	cons_nr_R	
0x212A:004	S-Bus: PROFIsafe control byte • Read only		
	Bit 0	iPar_EN	
	Bit 1	OA_Req	
	Bit 2	R_cons_nr	
	Bit 3	Use_TO2	
	Bit 4	activate_FV	
	Bit 5	Toggle_h	
	Bit 6	ChF_Ack	
	Bit 7	Loopcheck	

18.23.2 FSoE connection

Fail-safe-over-EtherCAT (FSoE) enables the transmission of safe information via FSoE protocol according to ETG.5100 S specification, version 1.2.0 of the EtherCAT user organisation (ETG).

Safety over EtherCAT® is a registered trademark and patented technology, licensed by Beckhoff Automation GmbH, Germany.

FSoE availability

i950 extended safety Technology application		FSoE via onboard EtherCAT		FSoE via EtherCAT module I9MAFT0000000S	
		From safety firmware V1.1 with parameter set version V1.1		From safety firmware V1.2 with parameter set version V1.2	
		With Lenze components	With Beckhoff components	With Lenze components	With Beckhoff components
	EtherCAT master	Lenze Controller	Beckhoff PLC	Lenze Controller	Beckhoff PLC
	FSoE master	Lenze c250-S	TwinSAFE	Lenze c250-S	TwinSAFE
Device profile CiA 402 (0x4000 = 0)		From device firmware V01.04.01 Without SD card	-	-	
CiA 402 Advanced (0x4000 = 1)		From device firmware V01.04.01 With SD card	From device firmware V01.03.07 With SD card	-	
All other technology applications (0x4000 > 1)				From device firmware V01.04.01 With SD card	

ESI file

The ESI file can be used to integrate Lenze EtherCAT devices into the EtherCAT configuration software of PLC manufacturers.

The ESI file is NOT required for Lenze controllers with EtherCAT master functionality. For Lenze controllers, all device description files are installed with Lenze PLC Designer and Lenze Package Manager.

Download of the current ESI file → www.lenze.com

Addressing

A definite FsoE address ensures that a data frame reaches the correct node. If "FSoE" has been selected as safety bus, the safety address is at the same time accepted as the FSoE target address. This address must match the corresponding configuration of the safety PLC.

The checksums (CRC) of a parameter set are calculated via the set safety parameters. The calculated checksums of the safety parameter set must match the corresponding configuration of the safety PLC.

FSoE frame

Range	Values
FSoE data	Safety outputs: 11 bytes
	Safety inputs: 31 bytes

FSoE output data

The FSoE output data (control data) is transmitted from the control.

	Bit offset							
Byte offset	**Bit 7**	**Bit 6**	**Bit 5**	**Bit 4**	**Bit 3**	**Bit 2**	**Bit 1**	**Bit 0**
Byte 0	Command (CMD)							
Byte 1	AIE	SDIneg	SDIpos	-	SOS	SS2	SS1	STO
Byte 2	SSE	SLI	ES	RMS	OMS	SHOM load	SHOM start	AIS
Byte 3	CRC_0 (low-byte)							
Byte 4	CRC_0 (high-byte)							
Byte 5	SLP4	SLP3	SLP2	SLP1	SLS4	SLS3	SLS2	SLS1
Byte 6	-	-	-	-	-	SBC	SD-Out1	PDSS
Byte 7	CRC_1 (low-byte)							
Byte 8	CRC_1 (high-byte)							
Byte 9	Connection-ID (low-byte)							
Byte 10	Connection-ID (high-byte)							

FSoE input data

The FsoE input data (status information) is transmitted to the control.

	Bit offset							
Byte offset	**Bit 7**	**Bit 6**	**Bit 5**	**Bit 4**	**Bit 3**	**Bit 2**	**Bit 1**	**Bit 0**
Byte 0	Command (CMD)							
Byte 1	Error active	SDIneg active	SDIpos active	-	SOS active	-	-	STO active
Byte 2	SSE active	SLI active	ES active	RMS active	OMS active	SOS observed	SS2 active	SS1 active
Byte 3	CRC_0 (low-byte)							
Byte 4	CRC_0 (high-byte)							
Byte 5	SLS4 observed	SLS3 observed	SLS2 observed	SLS1 observed	SLS4 active	SLS3 active	SLS2 active	SLS1 active
Byte 6	SCA4 withinLimit	SCA3 withinLimit	SCA2 withinLimit	SCA1 withinLimit	SLP4 observed	SLP3 observed	SLP2 observed	SLP1 observed
Byte 7	CRC_1 (low-byte)							
Byte 8	CRC_1 (high-byte)							
Byte 9	SSM within limits	SMS observed	PDSSneg obs.	PDSSpos obs.	SDIneg observed	SDIpos observed	SHom available	SHom active
Byte 10	-	-	-	-	MUT active	Positive direction	n=0	Safe speed OK
Byte 11	CRC_2 (low-byte)							
Byte 12	CRC_2 (high-byte)							
Byte 13	-	-	-	-	SD-In4	SD-In3	SD-In2	SD-In1
Byte 14	-	-	-	-	-	SBC activated	SBC active	SD-Out1
Byte 15	CRC_3 (low-byte)							
Byte 16	CRC_3 (high-byte)							
Byte 17	Actual Speed n_safe, Byte 0							
Byte 18	Actual Speed n_safe, Byte 1							
Byte 19	CRC_4 (low-byte)							
Byte 20	CRC_4 (high-byte)							
Byte 21	Actual Position p_safe, Byte 0							
Byte 22	Actual Position p_safe, Byte 1							
Byte 23	CRC_5 (low-byte)							
Byte 24	CRC_5 (high-byte)							
Byte 25	Actual Position p_safe, Byte 2							
Byte 26	Actual Position p_safe, Byte 3							
Byte 27	CRC_6 (low-byte)							
Byte 28	CRC_6 (high-byte)							
Byte 29	Connection-ID (low-byte)							
Byte 30	Connection-ID (high-byte)							

Parameter

Address	Name / setting range / [default setting]	Information
0x212A:001	S-Bus: FSoE project CRC 0 ... [] ... 4294967295	
0xE600:001	FSoE Slave Frame Elements: Command • Read only	
0xE600:002	FSoE Slave Frame Elements: Connection ID • Read only	
0xE600:003	FSoE Slave Frame Elements: CRC_0 • Read only	
0xE600:004	FSoE Slave Frame Elements: CRC_1 • Read only	
0xE600:005	FSoE Slave Frame Elements: CRC_2 • Read only	
0xE600:006	FSoE Slave Frame Elements: CRC_3 • Read only	
0xE600:007	FSoE Slave Frame Elements: CRC_4 • Read only	
0xE600:008	FSoE Slave Frame Elements: CRC_5 • Read only	
0xE600:009	FSoE Slave Frame Elements: CRC_6 • Read only	
0xE700:001	FSoE Master Frame Elements: Command • Read only	
0xE700:002	FSoE Master Frame Elements: Connection ID • Read only	
0xE700:003	FSoE Master Frame Elements: CRC_0 • Read only	
0xE700:004	FSoE Master Frame Elements: CRC_1 • Read only	
0xE901:001	FSoE Connection Communication Parameter: Version • Read only	
0xE901:002	FSoE Connection Communication Parameter: Safety address • Read only	
0xE901:003	FSoE Connection Communication Parameter: Connection ID • Read only	
0xE901:004	FSoE Connection Communication Parameter: Watchdog Time • Read only	
0xE901:006	FSoE Connection Communication Parameter: Connection Type • Read only	
	0 Master	
	1 Slave	
0xE901:007	FSoE Connection Communication Parameter: Communication Parameter Length • Read only	
0xE901:008	FSoE Connection Communication Parameter: Application Parameter Length • Read only	
0xEA00:001	FSoE Connection Diagnosis: Connection State • Read only	
	0 Reset	
	1 Session	
	2 Connection	
	3 Parameter	
	4 Data	
	5 Failsafe	

18.24 Connection to the applications

18.24.1 Safe inputs

Parameter

Address	Name / setting range / [default setting]		Information
0x2118:001	SD-In: SD-In1 sensor type • Read only		Changes only possible in the +Safety parameter list+.
	0	Input disabled	
	1	Passive sensor	
	2	Active sensor	
0x2118:002	SD-In: SD-In2 sensor type • Read only		
	0	Input disabled	
	1	Passive sensor	
	2	Active sensor	
0x2118:003	SD-In: SD-In3 sensor type • Read only		
	0	Input disabled	
	1	Passive sensor	
	2	Active sensor	
0x2118:004	SD-In: SD-In4 sensor type • Read only		
	0	Input disabled	
	1	Passive sensor	
	2	Active sensor	
0x2119:001	SD-In: SD-In1 discrepancy time • Read only: x ms		Maximum time within which the two channels of the secure input may be in impermissible states without an error being detected.. Changes only possible in the +Safety parameter list+.
0x2119:002	SD-In: SD-In2 discrepancy time • Read only: x ms		
0x2119:003	SD-In: SD-In3 discrepancy time • Read only: x ms		
0x2119:004	SD-In: SD-In4 discrepancy time • Read only: x ms		
0x211A:001	SD-In: SD-In1 input delay • Read only: x ms		Delay time between the detection of the signal change at the safe input and the effective evaluation of the input signal. Changes only possible in the +Safety parameter list+.
0x211A:002	SD-In: SD-In2 input delay • Read only: x ms		
0x211A:003	SD-In: SD-In3 input delay • Read only: x ms		
0x211A:004	SD-In: SD-In4 input delay • Read only: x ms		
0x211B	Input image • Read only		Bit-coded display of the status of the safe inputs Logic: 1 = channel/input active
	Bit 0	SD-In1 channel A	
	Bit 1	SD-In1 channel B	
	Bit 2	SD-In2 channel A	
	Bit 3	SD-In2 channel B	
	Bit 4	SD-In3 channel A	
	Bit 5	SD-In3 channel B	
	Bit 6	SD-In4 channel A	
	Bit 7	SD-In4 channel B	
	Bit 16	AIE	
	Bit 17	AIS	
	Bit 24	IRS	
	Bit 25	IRL	
	Bit 31	Button S82	

18.24.2 Safe output

Parameter

Address	Name / setting range / [default setting]		Information
0x2129:001	S-Bus control bits: SD-Out1 • Read only		Display of the control bit status from the safety bus.
0x2120:001	SD-Out: SD-Out1 source S-Bus • Read only		Changes only possible in the +Safety parameter list+.
	0	Disabled	
	1	Activated	
0x2121:001	SD-Out: SD-Out1 logic function • Read only		Changes only possible in the +Safety parameter list+.
	0	OR	
	1	AND	
0x2122	Output image • Read only		Bit-coded display of the status of the safe outputs Logic: 1 = channel active
	Bit 0	SD-Out1 channel A	
	Bit 1	SD-Out1 channel B	

18.24.3 Control signals

Parameter

Address	Name / setting range / [default setting]		Information
0x2870:001	SafetyInterface: Control • Read only		Bit-coded control word of the safety functions.
	Bit 0	STO active	
	Bit 1	SS1 active	
	Bit 2	SS2 active	
	Bit 3	SOS active	
	Bit 4	SLS1 active	
	Bit 5	SLS2 active	
	Bit 6	SLS3 active	
	Bit 7	SLS4 active	
	Bit 8	SDIpos active	
	Bit 9	SDIneg active	
	Bit 10	SLI active	
	Bit 11	SSE active	
	Bit 12	ES active	
	Bit 13	OMS active	
	Bit 14	RMS active	
	Bit 15	SBC active	
	Bit 16	MUT active	

Address	Name / setting range / [default setting]		Information
0x2874	S-Bus control data • Read only		Display of the control data from the safety bus, filtered with the functions parameterized via S-Bus. Logic: 1 = Function requested
	Bit 0	STO	
	Bit 1	SS1	
	Bit 2	SS2	
	Bit 3	SLS1	
	Bit 4	SLS2	
	Bit 5	SLS3	
	Bit 6	SLS4	
	Bit 7	SDIpos	
	Bit 8	SDIneg	
	Bit 9	ES	
	Bit 10	SLI	
	Bit 11	OMS	
	Bit 12	SLP1	
	Bit 13	SLP2	
	Bit 14	SLP3	
	Bit 15	SLP4	
	Bit 16	AIS	
	Bit 17	AIE	
	Bit 18	SOS	
	Bit 19	RMS	
	Bit 20	SHom_Start	
	Bit 21	SHom_Load	
	Bit 22	PDSS	
	Bit 23	SSE	
	Bit 24	SD-Out1	
	Bit 25	SBC	

Address	Name / setting range / [default setting]	Information
0x2875:001	S-Bus control bits: STO • Read only	Display of the control bit status from the safety bus without filtering and changing the logic.
0x2875:002	S-Bus control bits: SS1 • Read only	
0x2875:003	S-Bus control bits: SS2 • Read only	
0x2875:004	S-Bus control bits: SLS1 • Read only	
0x2875:005	S-Bus control bits: SLS2 • Read only	
0x2875:006	S-Bus control bits: SLS3 • Read only	
0x2875:007	S-Bus control bits: SLS4 • Read only	
0x2875:008	S-Bus control bits: SDIpos • Read only	
0x2875:009	S-Bus control bits: SDIneg • Read only	
0x2875:011	S-Bus control bits: SLI • Read only	
0x2875:013	S-Bus control bits: SLP1 • Read only	
0x2875:014	S-Bus control bits: SLP2 • Read only	
0x2875:015	S-Bus control bits: SLP3 • Read only	
0x2875:016	S-Bus control bits: SLP4 • Read only	
0x2875:017	S-Bus control bits: AIS • Read only	
0x2875:018	S-Bus control bits: AIE • Read only	
0x2875:021	S-Bus control bits: SHom_Start • Read only	
0x2875:022	S-Bus control bits: SHom_Load • Read only	
0x2875:023	S-Bus control bits: PDSS • Read only	
0x2875:024	S-Bus control bits: SSE • Read only	
0x2875:026	S-Bus control bits: SBC • Read only	

18.24.4 Status signals

Parameter

Address	Name / setting range / [default setting]	Information
0x211C:001	Status bits inputs: SD-In1 • Read only	Display of the status bit of the safe inputs.
0x211C:002	Status bits inputs: SD-In2 • Read only	
0x211C:003	Status bits inputs: SD-In3 • Read only	
0x211C:004	Status bits inputs: SD-In4 • Read only	
0x211C:005	Status bits inputs: AIS Dig-In • Read only	
0x211C:006	Status bits inputs: AIE Dig-In • Read only	
0x211C:007	Status bits inputs: IRS Dig-In • Read only	
0x211C:008	Status bits inputs: IRL Dig-In • Read only	
0x2123:001	Status bits outputs: SD-Out1 • Read only	Display of the status bit of the save output.
0x2132	ES state • Read only	Display of the internal states of the extended safety.
0x2870:002	SafetyInterface: State • Read only	Bit-coded status word of the safety functions
	Bit 0 SLS1 observed	
	Bit 1 SLS2 observed	
	Bit 2 SLS3 observed	
	Bit 3 SLS4 observed	
	Bit 4 SMS observed	
	Bit 5 SSM within limits	
	Bit 6 SDIpos observed	
	Bit 7 SDIneg observed	
	Bit 8 SLP1 observed	
	Bit 9 SLP2 observed	
	Bit 10 SLP3 observed	
	Bit 11 SLP4 observed	
	Bit 12 SCA1 within limits	
	Bit 13 SCA2 within limits	
	Bit 14 SCA3 within limits	
	Bit 15 SCA4 within limits	
	Bit 16 PDSS positive observed	
	Bit 17 PDSS negative observed	
	Bit 18 SOS observed	
	Bit 19 SBC activated	
	Bit 20 SHom activated	
	Bit 21 SHom available	
	Bit 22 Safe speed OK	
	Bit 23 n=0	
	Bit 24 Positive travel direction	
	Bit 25 Slip > 25 %	
	Bit 26 Slip > 50 %	
	Bit 27 Slip > 75%	
	Bit 31 Fault active	

Address	Name / setting range / [default setting]		Information
0x2870:003	SafetyInterface: IO State • Read only		Bit-coded I/O status word of the inputs.
	Bit 0	SD-In1	
	Bit 1	SD-In2	
	Bit 2	SD-In3	
	Bit 3	SD-In4	
	Bit 4	AIS SD-In	
	Bit 5	AIE SD-In	
	Bit 6	IRS SD-In	
	Bit 7	IRL SD-In	
	Bit 8	AIS S-Bus	
	Bit 9	AIE S-Bus	
	Bit 10	SHom_Start S-Bus	
	Bit 11	SHom_Load S-Bus	
	Bit 12	SD-Out1	
	Bit 16	SD-In1 channel A	
	Bit 17	SD-In1 channel B	
	Bit 18	SD-In2 channel A	
	Bit 19	SD-In2 channel B	
	Bit 20	SD-In3 channel A	
	Bit 21	SD-In3 channel B	
	Bit 22	SD-In4 channel A	
	Bit 23	SD-In4 channel B	
	Bit 24	SD-Out1 channel A	
	Bit 25	SD-Out1 channel B	

Address	Name / setting range / [default setting]	Information
0x2871:001	SafetyInterface bits: STO active • Read only	Display of the individual bits from the control word of the safety functions 0x2870:001 Logic: 1 = function active
0x2871:002	SafetyInterface bits: SS1 active • Read only	
0x2871:003	SafetyInterface bits: SS2 active • Read only	
0x2871:004	SafetyInterface bits: SOS active • Read only	
0x2871:005	SafetyInterface bits: SLS1 active • Read only	
0x2871:006	SafetyInterface bits: SLS2 active • Read only	
0x2871:007	SafetyInterface bits: SLS3 active • Read only	
0x2871:008	SafetyInterface bits: SLS4 active • Read only	
0x2871:009	SafetyInterface bits: SDIpos active • Read only	
0x2871:010	SafetyInterface bits: SDIneg active • Read only	
0x2871:011	SafetyInterface bits: SLI active • Read only	
0x2871:012	SafetyInterface bits: SSE active • Read only	
0x2871:013	SafetyInterface bits: ES active • Read only	
0x2871:014	SafetyInterface bits: OMS active • Read only	
0x2871:015	SafetyInterface bits: RMS active • Read only	
0x2871:016	SafetyInterface bits: SBC active • Read only	
0x2871:017	SafetyInterface bits: MUT active • Read only	

Address	Name / setting range / [default setting]	Information
0x2871:033	SafetyInterface bits: SLS1 observed • Read only	Display of the individual bits from the status word of the safety functions. 0x2870:002 Logic: 1 = function active
0x2871:034	SafetyInterface bits: SLS2 observed • Read only	
0x2871:035	SafetyInterface bits: SLS3 observed • Read only	
0x2871:036	SafetyInterface bits: SLS4 observed • Read only	
0x2871:037	SafetyInterface bits: SMS observed • Read only	
0x2871:038	SafetyInterface bits: SSM within limits • Read only	
0x2871:039	SafetyInterface bits: SDIpos observed • Read only	
0x2871:040	SafetyInterface bits: SDIneg observed • Read only	
0x2871:041	SafetyInterface bits: SLP1 observed • Read only	
0x2871:042	SafetyInterface bits: SLP2 observed • Read only	
0x2871:043	SafetyInterface bits: SLP3 observed • Read only	
0x2871:044	SafetyInterface bits: SLP4 observed • Read only	
0x2871:045	SafetyInterface bits: SCA1 within limits • Read only	
0x2871:046	SafetyInterface bits: SCA2 within limits • Read only	
0x2871:047	SafetyInterface bits: SCA3 within limits • Read only	
0x2871:048	SafetyInterface bits: SCA4 within limits • Read only	
0x2871:049	SafetyInterface bits: PDSSpos observed • Read only	
0x2871:050	SafetyInterface bits: PDSSneg observed • Read only	
0x2871:051	SafetyInterface bits: SOS observed • Read only	
0x2871:052	SafetyInterface bits: SBC activated • Read only	
0x2871:053	SafetyInterface bits: SHom active • Read only	
0x2871:054	SafetyInterface bits: SHom available • Read only	
0x2871:055	SafetyInterface bits: Safe speed OK • Read only	
0x2871:056	SafetyInterface bits: n=0 • Read only	
0x2871:057	SafetyInterface bits: Positive direction • Read only	
0x2871:058	SafetyInterface bits: Slip > 25% • Read only	
0x2871:059	SafetyInterface bits: Slip > 50% • Read only	
0x2871:060	SafetyInterface bits: Slip > 75% • Read only	
0x2871:064	SafetyInterface bits: Error active • Read only	

Address	Name / setting range / [default setting]	Information
0x2871:073	SafetyInterface bits: AIS S-Bus • Read only	Display of individual bits from the I/O status word of the inputs. 0x2870:003 Logic: 1 = function active
0x2871:074	SafetyInterface bits: AIE S-Bus • Read only	
0x2871:075	SafetyInterface bits: SHom_Start S-Bus • Read only	
0x2871:076	SafetyInterface bits: SHom_Load S-Bus • Read only	

18.25 Safe parameter setting

18.25.1 Safety address

The safety address is set using the 0xF980 parameter.

Parameter

Address	Name / setting range / [default setting]	Information
0xF980:001	Safety addresses: FSoE address • Read only	Display of the safe address set in the device.
0xF980:002	Safety addresses: Safety address • Read only	Setting of the safe address. Permitted value range: 1 ... 65534 Changes only possible in the +Safety parameter list+.

18.25.2 Parameter set information

Parameter

Address	Name / setting range / [default setting]	Information
0x2114:001	Parameter set: Version • Read only	Display of the version of the safe parameter set.
	1003 i950 ES V1.0	Versions of the safe parameter set for i950 extended safety.
	10103 i950 ES V1.1	
	10203 i950 ES V1.2	
	10303 i950 ES V1.3	
0x2114:002	Parameter set: Project CRC 0 ... [**0**] ... 4294967295	Project CRC of the safe parameter set.
0x2115:001	Parameter set: Status • Read only	
	0 No parameter set	
	1 Valid parameter set	
	4 CRC error	
	5 Version error	
	7 Plausibility error	
	8 Assignment error	
	9 Local read error	
	10 Communication error with basic device	
	11 Faulty release	
	12 Different CRCs	
	13 Changed parameter set	
	14 Parameter set checked	
	15 Parameter set check active	
0x2115:002	Parameter set: Current CRC • Read only	Display of the current parameter CRC from the safe parameter set.
0x2115:003	Parameter set: Last valid CRC • Read only	Display of the last valid parameter set CRC.
0x2115:004	Parameter set: Parameter setting time stamp • Read only: x s	Time when the parameter set is taken over from the device as the value of the power-on time meter.
0x2115:005	Parameter set: Error information 1 • Read only	Error number in case of a plausibility error. 0x2115:001 = 7 Details: ▸ Extended Safety - Parameter set plausibility errors 🕮 705
0x2115:006	Parameter set: Error information 2 • Read only	Reserved
0x2115:007	Parameter set: Error information 3 • Read only	
0x2115:008	Parameter set: Current CRC without safety address • Read only	Display of the current parameter CRC from the safe parameter set without safety address.

18.26 Response times of the safety unit

The overall system must be taken into account when determining the response time following a safety function request.

Decisive for the reaction time are:

- Response time of the connected safety sensors.
- Input delay of the safety inputs.
- Internal processing time.
- Deceleration times, braking times, and stopping times from the parameterized safety functions.
- When a feedback system is used:
  - The response time of encoder monitoring. 0x2878:004
- When a safety bus is used:
  - Monitoring time for cyclic services.
  - Monitoring time in the safety PLC.
  - Processing time in the safety PLC.
- Delay times due to further components.

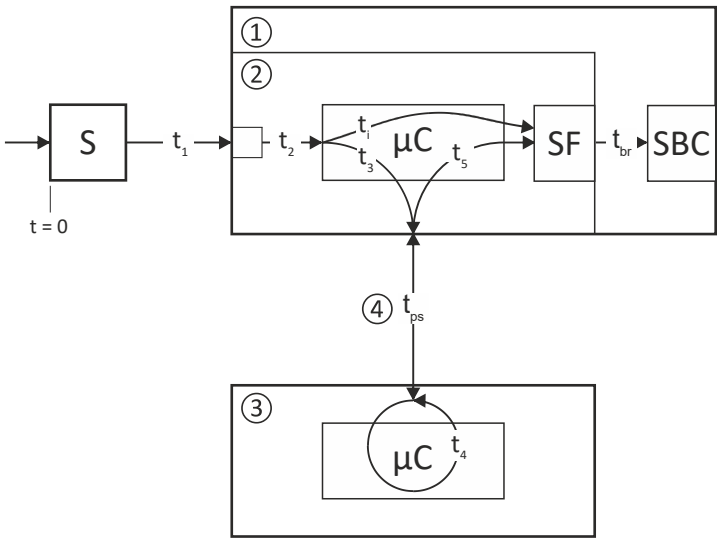

Fig. 80: Response times to the request of a safety function

1	Standard device	µC	Microcontroller
2	Integrated safety	S	Safety sensors
3	Safety PLC	SF	Activated safety function
4	Safety bus	SBC	Safe Brake Control

Response times of safe inputs

Response time to an event in the safety sensors			[ms]
t_1	Response time of the safety sensors		according to manufacturer information
t_2	Input delay of the safe inputs		
		Parameterizable via: 0x211A:001, 0x211A:002, 0x211A:003, 0x211A:004	0...100
		Input filter	2
t_i	Processing time in drive-based safety sensor technology		4
	Safety function starts after		$t_1 + t_2 + t_i$

Tab. 3: Response time to an event in the safety sensors

Response time of the safe output

Response time of the safe output to a safety function		[ms]
	Safe output SD-Out 1 switches to	4

Tab. 4: Response time - safe output

Response time of encoder monitoring

Time required to detect faults caused by continuous signal errors at the encoder interface.			[ms]
		Default setting	50
		Parameterizable via: 0x2878:004	12/50/100

It must be evaluated for each application what minimum response time is possible.

The longer the reaction time, the more the safe speed is filtered.

During dynamic processes (acceleration, deceleration), the safely evaluated speed (nSD) lags behind the actual speed of the drive (nBD) (displayed in 0x287B:006). This time offset must be taken into account when reaching limit values.

Response times of safe SBC brake control

Response time from the detection of the SBC safety function to the switch-off of the safe brake control			[ms]
t_{br}	Delay time between request and activation of the brake control		
		Parameterizable via: 0x28E6:002	0 ... 30000
t_i	Processing time in drive-based safety sensor technology		4
	Control X106 starts after		$t_{br} + t_i$

Test pulse interval and error response time		[ms]
	Test pulse interval, brake control	100
	Error response time, min. time for error detection and error triggering	200

Response times of the safety bus

Response time to an event on the safety sensors (input data)			[ms]
t_1	Response time of the safety sensors		See manufacturer information
t_2	Input delay of the safe inputs		
		Parameterizable via: 0x211A:001, 0x211A:002, 0x211A:003, 0x211A:004	0...100
		Input filter	2
t_3	Processing time in integrated safety technology		
	Main Task cycle time	Technology application	1
		PLC project	As set
	Internal transmission time PROFIsafe	Safety: from firmware 1.0.1 Standard device: from firmware 1.2	40
	Internal transmission time FSoE	Safety: from firmware 1.1.x Standard device: from firmware 1.3	8
Input data ready for transmission			$t_1 + t_2 + t_3$
t_{ps}	PROFINET cycle time		See manufacturer information
	EtherCAT cycle time		See manufacturer information
Input data ready for processing in the safety PLC			$t_1 + t_2 + t_3 + t_{ps}$

Tab. 5: Response time to an event on the safety sensors

Response time to a control word (output data)			[ms]
t_4	Processing time in the safety PLC		Calculate
t_{ps}	PROFINET cycle time		See manufacturer information
	EtherCAT cycle time		See manufacturer information
t_5	Processing time in integrated safety technology		
	Main Task cycle time	Technology application	1
		PLC project	As set
	Internal transmission time PROFIsafe	Safety: from firmware 1.0.1 Standard device: from firmware 1.2	108
	Internal transmission time FSoE	Safety: from firmware 1.1.x Standard device: from firmware 1.3	16
Safety function starts after			$t_4 + t_{ps} + t_5$

Tab. 6: Response time for request via the safety bus

Information on how to calculate the processing time and transmission time of the safety bus can be found in the documentation of the safety PLC used.

When the safety bus communication is disturbed, it is changed to the fail-safe state after the safety bus monitoring time (F_WD_Time) has elapsed. The safety bus communication is passivated.

Example

- After an event at a safe input, the message is fed back to the integrated safety technology via the safety PLC.
- The integrated safety technology then triggers a safety function.
- The maximum response time to the event is then calculated to:
  - $t_{max} = t_1 + t_2 + t_3 + \max (F\_WD\_Time; t_{ps} + t_4 + t_{ps} + t_5)$
  - Include the times of the safety functions in the calculation, e.g. for SS1 the stopping time until STO is active. 0x2894:001

Parameter set acceptance from the SD card

Safe parameter set acceptance is supported by means of a safe parameter set saved in the device.

18.27 Calculation of the maximum response times

For the calculation of the response time to the request of a safety function, the overall system must be taken into account:

- Response time of the connected safety sensors.
- Input delay of the safety inputs.
- Internal processing time.
- Deceleration times, braking times, and stopping times from the parameterized safety functions.
- When using a feedback system, the response time of encoder monitoring 0x2878:004
- Safety bus:
  - Monitoring time for cyclic services.
  - Monitoring time in the safety PLC.
  - Processing time in the safety PLC
- Delay times due to further components.

The ETG FSoE protocol specification contains formulas for calculating the maximum response time in fault-free operation and in the event of a fault.

In the "Application Knowledge Base", Lenze provides an Excel table as a calculation aid. This can be used to easily calculate the reaction times.

Link to "Application Knowledge Base"

Please note the following:

The variables for the individual response times are named differently in the documentation for the c250-S safety controller than in the FSoE protocol specification of the ETG.

In the following graphics, the differences are marked with "Lenze" and "ETG".

Definition of the single response times

Name Lenze	Name ETG	Description	Comment
T_Sensor	T_S	Processing time of the sensor until the signal is available at the interface.	See technical data of the sensor
T_InputFilter		Parameterized filter time of the safe input.	
T_Input	T_I	Processing time of the safe input.	E.g. safety I/O module, FSoE sensor or inverter. See technical data
T_WDInput	T_WD_In	Monitoring time parameterized in the safety PLC (c250-S) for the safe input module.	E.g. safety I/O module, FSoE sensor or inverter.
T_EtherCAT	T_Com	EtherCAT cycle time	
T_FSoE		Processing time of the communication, depending on the EtherCAT cycle time	The documentation of the c250-S specifies max. 3 x T_EtherCAT. The ETG FSoE protocol specification specifies max. 2 x T_Com. It depends on the application which factor can be used. Factor 3 means improved availability of secure communications.
T_SafetyPLC	T_L	Processing time of the safety PLC (c250-S).	Corresponds to the set cycle time of the safety application.
T_Output	T_O	Processing time of the safe output.	E.g. safety I/O module or inverter. See technical data
T_WDOutput	T_WD_Out	Monitoring time parameterized in the safety PLC (c250-S) for the safe output module.	E.g. safety I/O module or inverter.
T_Aktor	T_A	Processing time of the actuator.	See technical data of the actuator

18.28 Diagnostics

18.28.1 LED status display

The LEDs "RDY" and "ERR" show the current safety status:

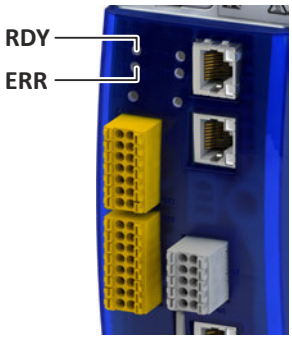

Fig. 81: Position of the RDY and ERR LEDs

18.28.1.1 LED indication for status messages

Status display after initialization /during operation

LED "RDY" (yellow)	Status	Meaning
off	-	No status message active
on (yellow)	Restart acknowledgement requested	
blinking yellow 2 Hz	SOS active	
blinking yellow 1 Hz	Service status	Transfer of parameter set requested.

18.28.1.2 LED indication for errors

Error message

"ERR" LED (red)	Status	Meaning
off	-	The device is working correctly.
blinking red 2 Hz	Safety bus error	Communication via the safety bus is not established: • There is no valid configuration. • The start-up has not been completed yet.
blinking red 1 Hz	Safety technology error	One of the following errors has been detected: • A monitoring device has been activated. • An acknowledgeable error is active. • Discrepancy of the inputs

Display for critical device errors

LED "RDY" (yellow)	"ERR" LED (red)	Status	Meaning
From safety firmware 1.0.x			
off	on (red)	Critical	The device is defective. It must be replaced.
From safety firmware 1.3.x			
blinking yellow	blinking red	Critical system error	• "Lock-out" (CPU stopped). • STO is active. • If the system error occurs again after switching the 24 V supply, the device is defective. It must be replaced.

18.28.1.3 LED indication for requested acknowledgement

Status display during initialization

LED "RDY" (yellow)	"ERR" LED (red)	Meaning
on	blinking red 1 Hz	During startup, a modified parameter set was detected in the "Init" state. Acknowledge with confirmation button S82.
	blinking red 2 Hz	During startup, a changed safety address was detected in the "Init" state. Acknowledge with confirmation button S82.
	blinking red	During startup, a changed assignment between OCT encoder and inverter was detected in the "Init" state. Acknowledge with confirmation button S82.

Acknowledgement procedure with confirmation button S82

All requests are acknowledged with the same steps.

The acknowledgement procedure is aborted if the reaction time of 2.5 seconds is exceeded. The acknowledgement procedure must be repeated.

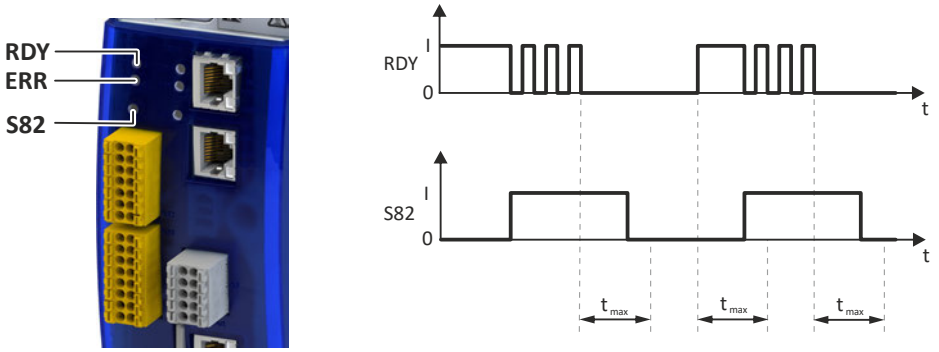

Fig. 82: Sequence of the acknowledgement procedure

RDY	LED "RDY"	tmax	Maximum permissible response time
S82	Confirmation button S82		
t	Time axis		

To acknowledge the request with the S82 confirmation button:

Precondition:

- The "RDY" LED is lit.
- The "ERR" LED is blinking.

1. Press and hold the S82 button.
   The "RDY" LED starts blinking.
2. The "RDY" LED goes off after 3 seconds.
3. Release the S82 button after a maximum of 2.5 seconds.
   The "RDY" LED is lit.
4. Press and hold the S82 button after a maximum of 2.5 seconds.
   The "RDY" LED starts blinking.
5. The "RDY" LED goes off after 3 seconds.
6. Release the S82 button after a maximum of 2.5 seconds.
   The acknowledgement is successfully completed.

   The action is recorded in the inverter logbook.
7. Use a function test to ensure that the acknowledgement has led to the correct result.

If the parameter set is invalid, an error is reported and the "ERR" LED starts blinking.

18.28.2 Event history

Extended Safety error messages are entered in 0x603F and in the logbook of the inverter.

The meaning of the error messages is described in chapter Events, causes and remedies.

If the operating status cannot be adequately diagnosed via the logbook, the event history provides Lenze Service with further diagnostic information.

Forward the event history to Lenze Service on request. E.g. screenshot of the "Logbook" blind under the "Safety Diagnostics" tab in the »EASY Starter«.

The event history must not be evaluated automatically because it contains internal debug information that may change from version to version.

Parameter

Address	Name / setting range / [default setting]	Information
0x2130:001	Event history: Current severity • Read only	Severity of the current event in 0x2130:002
	0 No error	
	1 Warning	
	2 Trouble	
0x2130:002	Event history: Internal event 1 • Read only	Currently active event
	Bit 0	
0x2130:003	Event history: Internal event 2 • Read only	Second most recent stored event
	Bit 0	
0x2130:004	Event history: Internal event 3 • Read only	...
	Bit 0	
0x2130:005	Event history: Internal event 4 • Read only	...
	Bit 0	
0x2130:006	Event history: Internal event 5 • Read only	...
	Bit 0	
0x2130:007	Event history: Internal event 6 • Read only	...
	Bit 0	
0x2130:008	Event history: Internal event 7 • Read only	...
	Bit 0	
0x2130:009	Event history: Internal event 8 • Read only	...
	Bit 0	
0x2130:010	Event history: Internal event 9 • Read only	...
	Bit 0	
0x2130:011	Event history: Internal event 10 • Read only	...
	Bit 0	
0x2130:012	Event history: Internal event 11 • Read only	...
	Bit 0	
0x2130:013	Event history: Internal event 12 • Read only	...
	Bit 0	
0x2130:014	Event history: Internal event 13 • Read only	...
	Bit 0	

Address	Name / setting range / [default setting]	Information
0x2130:015	Event history: Internal event 14 • Read only	...
	Bit 0	
0x2130:016	Event history: Internal event 15 • Read only	...
	Bit 0	
0x2130:017	Event history: Internal event 16 • Read only	Oldest stored event
	Bit 0	

18.28.3 Diagnostic parameters

Parameter

Address	Name / setting range / [default setting]	Information
0x212C:001	Device module: ES firmware version • Read only	Identification data for the device module "Extended Safety" (ES)
0x212D:001	Device module: ES HW version • Read only	
0x212D:002	Device module: ES product code • Read only	
0x212D:003	Device module: ES serial number • Read only	
0x212D:004	Device module: ES production date • Read only	
0x2131:001	Device module: ES power-on time • Read only: x s	
0x28E8:001	Diagnostic: Configuration diagnostic value 1	"Diagnostic value 1" configuration • Display in 0x28E9:001. • The configured value can be recorded via the oscilloscope function integrated in the Lenze tool.
	0 Not used	
	1 PDSS - Current monitored speed	Current PDSS speed
	2 SS1, SS2 - Current speed ramp	Deceleration ramp for safety functions SS1 and SS2
	10 Internal actual speed nSD	Speed value Safe-Drive, internally determined actual speed from the safety application
	11 Internal actual speed nBD	Speed value Base-Drive, internally determined actual speed from standard application
	20 PROFIsafe - Status	
	21 PROFIsafe - Status Byte	
	22 PROFIsafe - Control Byte	
	23 FSoE - Slave Command	FSoE command from safety slave
	24 FSoE - Master Command	FSoE command from safety master
	25 FSoE - Slave SafeData 0	FSoE data, byte 0 from safety slave
	26 FSoE - Master SafeData 0	FSoE data, byte 0 from safety master
	30 Internal event 1	Currently active event from the event history 0x2130:002

Address	Name / setting range / [default setting]		Information
0x28E8:002	Diagnostic: Configuration diagnostic value 2		"Diagnostic value 2" configuration • Display in 0x28E9:002. • The configured value can be recorded via the oscilloscope function integrated in the Lenze tool.
	0	Not used	
	1	PDSS - Current monitored speed	Current PDSS speed
	2	**SS1, SS2 - Current speed ramp**	Deceleration ramp for safety functions SS1 and SS2
	10	Internal actual speed nSD	Speed value Safe-Drive, internally determined actual speed from the safety application
	11	Internal actual speed nBD	Speed value Base-Drive, internally determined actual speed from standard application
	20	PROFIsafe - Status	
	21	PROFIsafe - Status Byte	
	22	PROFIsafe - Control Byte	
	23	FSoE - Slave Command	FSoE command from safety slave
	24	FSoE - Master Command	FSoE command from safety master
	25	FSoE - Slave SafeData 0	FSoE data, byte 0 from safety slave
	26	FSoE - Master SafeData 0	FSoE data, byte 0 from safety master
	30	Internal event 1	Currently active event from the event history 0x2130:002
0x28E9:001	Diagnostic: Diagnostic value 1 • Read only		Display of the value selected in 0x28E8:001.
0x28E9:002	Diagnostic: Diagnostic value 2 • Read only		Display of the value selected in 0x28E8:002.

18.29 Device exchange

How to replace a safe device:

1. Check the compatibility of the devices.
2. Check the memory cards of the devices.
3. Set the safety address.
4. Carry out a functional test.

Exchange a maximum of one safe device before recommissioning.

19 Diagnostics and fault elimination

This section contains information on error handling, drive diagnostics and fault analysis.

19.1 LED status display

The "RDY" and "ERR" LED status displays on the front of the inverter provide some quick information about certain operating states.

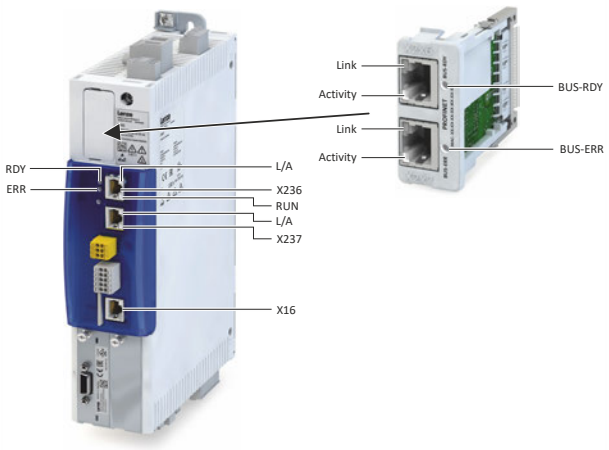

"RDY" LED (blue)	"ERR" LED (red)	Status/meaning
Off	Off	Supply voltage not available.
On	On	Initialisation in progress (inverter is being started.)
Blinks (1 Hz)	Off	Safe torque off (STO) active. The inverter has been inhibited by the integrated safety system. ▸ Safe torque off (STO) 🕮 477
Blinks (1 Hz)	On	Inverter inhibited, error active. ▸ Event handling 🕮 573
On	Off	Inverter enabled. **Motor rotates according to the specified setpoint or quick stop is active.**
Both LEDs are blinking in a rapidly alternating mode		Firmware update active. ▸ Update device firmware 🕮 458
Both LEDs are blinking in a very rapidly synchronous mode		"Visual tracking" function is active. ▸ Optical device identification 🕮 445

The description of the network-specific "BUS RDY" and "BUS ERR" LEDs can be found in chapters ▸ LED status display 🕮 440

19.2 Logbook

With the logbook, the controller has access to the last 32 messages of the inverter.

- The logbook is saved persistently in the inverter.
- The logbook has a ring buffer structure:
  - As long as free memory is available in the logbook, a message is entered following the next free memory unit.
  - When all memory units are occupied, the oldest message is deleted for a new message.
  - Always the most recent messages remain available.
- On the basis of the "Diag code" (32-bit word) of each individual message it can be seen which axis the message refers to.

Preconditions

The logbook can only be accessed

- via the user interface of »EASY Starter« ("Diagnostics" tab) or
- via network.

Details

In contrast to the error history buffer, the logbook additionally protocols the following events:

- Fault messages
- Change-over from normal to setup mode (and vice versa)
- Execution of device commands
- Avoidance of safety functions

The logbook entries are saved persistently in the inverter. If all 32 memory units are occupied, the oldest entry is deleted for a new entry. By means of the "Delete logbook" device command, all logbook entries can be deleted.

The logbook always displays only one active safety event.

Only when the cause of the safety event has been eliminated and the safety event has been acknowledged, the logbook will display the next safety event that is still active.

Accessing the logbook with »EASY Starter«

1. Select the inverter on the left side in the »EASY Starter« device list.
2. Change to the "Diagnostics" tab.
3. Click the icon to open the logbook.

Observe that the logbook only presents a snapshot at the time the data is read out. If a new event occurs, the logbook must be read out again so that the new event becomes visible.

Accessing the logbook via network

The logbook can also be accessed via network from a higher-level controller or a visualisation. The structure of the diagnostic messages complies with the "ETG.1020" standard of the EtherCAT Technology Group (ETG).

See chapter 13.3 of document "ETG.1020 Protocol Enhancements" provided by the EtherCAT Technology Group (ETG) for detailed information on the structure of the diagnostic messages.

Parameter

Address	Name / setting range / [default setting]		Information
0x2022:015	Device commands: Delete logbook		• When the device command has been executed successfully, the value 0 is shown. • Do not switch off the supply voltage during the deletion process and do not unplug the memory module!
	0	**Off / ready**	Only status feedback
	1	On / start	Execute device command
	2	In progress	Only status feedback
	3	Action cancelled	
	4	No access	
	5	No access (Device disabled)	

19.3 Diagnostic parameters

The inverter provides many diagnostic parameters which are helpful for operation, maintenance, error diagnosis, error correction, etc.

- The following overview lists the most common diagnostic parameters.
- Further parameters for more specific diagnostic purposes are described in the following subchapters.
- The diagnostic parameters can only be read and cannot be written to.

Parameter

Address	Name / setting range / [default setting]	Information
0x2030	CRC parameter set • Read only	Display of the checksum of the parameter set. The checksum is formed **without** the parameters of the technology applications. • Each parameter set has an individual checksum (CRC32) that is created from the settings of all storable indices (P-flag) of the parameter set. If a setting changes, the checksum changes as well. • Cyclic redundancy check (CRC): By comparing the checksums of parameter sets, you can check whether the parameter sets are identical or not. • If the checksum is identical with the checksum of the parameter set file saved in the Controller, the parameter set file does not need to be written into the inverter.
0x2B0B	Ramp generator frequency • Read only: x.x Hz	Display of the current frequency setpoint. The frequency setpoint is internally transferred to the motor control (based on scaling and ramp generator).
0x2D4F	Motor utilisation (i^2xt) • Read only: x %	Display of the current thermal motor utilisation.
0x2DA2:001	Output power: Effective power • Read only: x.xxx kW	Display of the active output power for an energy analysis in the respective application.
0x2DA3:003	Output energy: Overall energy -21474836.47 ... [**0.00**] ... 21474836.47 kWh	Display of the energy balance: • Positive values: Energy consumed • Negative values: Generated energy 0x2DA3:003 = 0 resets the energy balance. When replacing a device, the value of the old device can be adopted as the starting value for the new device.
0x2DD0:001	Field values: Actual value • Read only: x %	Display of the actual current flow value.
0x2DD0:002	Field values: Setpoint value • Read only: x %	Display of the setpoint flow value.
0x2DD1:001	Motor currents: Actual D-current (id) • Read only: x.xx A	Display of the actual D current.
0x2DD1:002	Motor currents: Actual Q-current (iq) • Read only: x.xx A	Display of the actual Q current.
0x2DD1:003	Motor currents: Setpoint D-current (id) • Read only: x.xx A	Display of the setpoint D current.
0x2DD1:004	Motor currents: Setpoint Q-current (iq) • Read only: x.xx A	Display of the setpoint Q current.
0x2DD1:005	Motor currents: Motor current (Ieff) • Read only: x.xx A	Display of the effective motor current.
0x2DD2	Target position interpolated • Read only: x inc	Display of the interpolated position setpoint.
0x2DD3:001	Speed setpoints: Speed setpoint • Read only: x rpm	Display of the speed setpoint value 1.
0x2DD3:002	Speed setpoints: Speed setpoint 2 • Read only: x rpm	Display of the speed setpoint value 2.
0x2DD3:003	Speed setpoints: Speed setpoint limited • Read only: x rpm	Display of the limited speed setpoint.
0x2DD4:001	Speed controller output signals: Output signal 1 • Read only: x.x %	Display of the output signal 1 from the speed controller.
0x2DD4:002	Speed controller output signals: Output signal 2 • Read only: x.x %	Display of the output signal 2 from the speed controller.

Address	Name / setting range / [default setting]	Information
0x2DD6:001	Torque filter cascade: Starting value • Read only: x.x %	Display of the start value.
0x2DD6:002	Torque filter cascade: Notch filter 1 input value • Read only: x.x %	Display of the input value for notch filter 1.
0x2DD6:003	Torque filter cascade: Notch filter 2 input value • Read only: x.x %	Display of the input value for notch filter 2.
0x2DD6:004	Torque filter cascade: Torque setpoint filtered • Read only: x.x %	Display of the filtered torque setpoint value.
0x2DD7:001	Voltage values: Actual voltage (motor voltage limit) • Read only: x.x V	Display of the current motor voltage limit.
0x2DD7:002	Voltage values: Output signal D current controller • Read only: x.x V	Display of the output voltage of the D-current controller.
0x2DD7:003	Voltage values: Output signal Q current controller • Read only: x.x V	Display of the output voltage of the Q-current controller.
0x2DD7:004	Voltage values: D voltage (magnetisation) • Read only: x.x V	Display of the D-voltage (magnetisation).
0x2DD7:005	Voltage values: Q voltage (torque) • Read only: x.x V	Display of the Q-voltage (torque).
0x2DD7:006	Voltage values: Phases U-V • Read only: x.x V	Display of the actual voltage phase U - phase V.
0x2DD7:007	Voltage values: Phases V-W • Read only: x.x V	Display of the actual voltage phase V - phase W.
0x2DD7:008	Voltage values: Phases W-U • Read only: x.x V	Display of the actual voltage phase W - phase U.
0x2DD7:009	Voltage values: Phase U • Read only: x.x V	Display of the actual voltage of phase U.
0x2DD7:010	Voltage values: Phase V • Read only: x.x V	Display of the actual voltage of phase V.
0x2DD7:011	Voltage values: Phase W • Read only: x.x V	Display of the actual voltage of phase W.
0x2DDC	Actual slip value • Read only: x.x Hz	Display of the actual slip.
0x2DDD	Output frequency • Read only: x.x Hz	Display of the current output frequency of the inverter.
0x2DDE	Actual rotor angle position • Read only	Display of the actual position of the rotor angle.
0x2DDF:001	Axis information: Rated current • Read only: x.xx A	Display of the rated current of the axis.
0x2DDF:002	Axis information: Maximum current • Read only: x.xx A	Display of the maximum current of the axis.
0x2DE0:006	OEM service Data - SN • Read only	Display of OEM service data.
0x6077	Actual torque • Read only: x.x %	Display of the actual torque. • 100 % = Rated motor torque 0x6076
0x6078	Actual current • Read only: x.x %	Display of the motor actual current. • 100 % = Rated motor current 0x6075
0x6079	DC-bus voltage • Read only: x.xxx V	Display of the current DC-bus voltage.

19.3.1 Inverter diagnostics

The following parameters supply some information about the current operating status of the inverter.

This includes the following information:

- Active access protection after log-in by means of PIN1/PIN2
- Currently loaded parameter settings
- Cause(s) for disable, quick stop and stop.
- Active control source and active setpoint source
- Active operating mode
- Status of the internal motor control

Parameter

Address	Name / setting range / [default setting]		Information
0x2010:001	Device event monitor: EreignisortEvent location • Read only		Display of the event location for the currently pending event.
	0	No error	
	1	Functional safety	
	4	Basic settings	
	5	Communication	
	6	Kinematics	
	7	Motion	
	8	Technology application	
0x2010:002	Device event monitor: Severity • Read only		Display of the severity level for the currently active event.
	0	No response	▸ Severity 📖 574
	1	Fault > CiA402	
	2	Warning	
	11	Information	
	13	Warning locked	
	15	Trouble > only logbook entry	
	16	Trouble	
	18	Fault > only logbook entry	
	19	Fault > application quick stop > quick stop	
	20	Fault > inverter quick stop > quick stop	
	21	Fault > inverter quick stop > inverter disabled	
	23	Fault > inverter disabled	
0x2010:003	Device event monitor: Event status • Read only		Display of the event status for the currently pending event.
	0	No event active	
	1	Reset possible	
	2	Reset not possible	
0x2010:005	Device event monitor: Number of current event • Read only		Display of the event ID for the currently pending event.
	Bit 0		
0x2010:006	Device event monitor: Time stamp of current event • Read only: x ns		Display of the time stamp for the current upcoming event.

Address	Name / setting range / [default setting]		Information
0x2012:001	Device information: SD card status • Read only		
	0	No SD card connected	
	1	SD card connected	
0x2012:002	Device information: Application Credit available • Read only		
0x2013:001	Application information: Active application • Read only		
	0	CiA 402	
	1	"CiA 402 advanced" technology application	
	5	"AC Drive Profile" technology application	
	10	"Speed Control" technology application	
	20	"Table Positioning" technology application	
	40	"Electronic Gearbox" technology application	
	41	"Sync and Correction" technology application	
	50	"Winder Dancer" technology application	
	51	"Winder Tension" technology application	
	100	"User" technology application	
0x2013:002	Application information: Application Credit required • Read only		
0x2040	Access protection status • Read only		Bit-coded display of the active access protection after login by PIN1/ PIN2.
	Bit 0	No write access	
	Bit 1	Only favorites changeable	
0x2539:001	Hardware-Diagnose: External supply voltage • Read only: x.x V		
0x2539:002	Hardware-Diagnose: Control board temperature • Read only: x.x °C		
0x2823	Status of axis commands • Read only		
0x282A:001	Status words: Cause of disable • Read only		Bit-coded display of the cause(s) for disabled inverter.
	Bit 2	Axis command	1 = the inverter was disabled via axis command 0x2822:001.
	Bit 7	Drive not ready	1 = the inverter was disabled internally since the drive was not ready for operation. Possible causes: • Under/overvoltage in the DC bus • Defective device hardware
	Bit 12	CiA402 Inverter disabled	1 = the inverter was disabled by the internal state machine. The bit is only set if • Operating mode 0x6060 = "CiA: Velocity mode (vl) [2]" and • state machine in the "Switch on disabled" state and • the state change has not been carried out via the "Disable operation" command.
	Bit 14	Safety	1 = the inverter has been disabled by the integrated safety system.
	Bit 16	PROFINET energy pause active	-
0x282A:004	Status words: Extended status word • Read only		Bit-coded status word.
	Bit 0	Brake is opened	-
	Bit 1	Reserved	

Address	Name / setting range / [default setting]		Information
0x2831	Inverter status word • Read only		Bit coded status word of the internal motor control.
	Bit 0	Position controller in limitation	-
	Bit 1	Speed setpoint 1 limited	1 = input of speed controller 1 in limitation.
	Bit 2	Speed controller in limitation	1 = output of speed controller 1 in limitation.
	Bit 3	Torque setpoint limited	1 = setpoint torque in limitation.
	Bit 4	Q-current setpoint limited	1 = setpoint current in limitation.
	Bit 5	Speed setpoint 2 limited	1 = input of speed controller 2 in "torque mode" in limitation.
	Bit 6	Upper speed limit active	1 = in "torque mode", the speed is limited to upper speed limit 0x2946:001 .
	Bit 7	Lower speed limit active	1 = in "torque mode", the speed is limited to lower speed limit 0x2946:002 .
	Bit 8	Flying restart active	-
	Bit 9	Flying restart completed	
	Bit 10	Output frequency limited	1 = setpoint frequency with V/f operation in limitation.
	Bit 11	Magnetization completed	1 = Magnetisation completed during V/f operation. Otherwise 0.
	Bit 12	Motor phase error	1 = motor phase failure detection active.
	Bit 13	Feedback open circuit	-
	Bit 14	Error reset blocking time active	1 = the error can only be reset when the blocking time has elapsed.
	Bit 15	Clamp active	-
0x2833	Inverter status word 2 • Read only		Bit-coded status word 2 of the inverter.
	Bit 0	Motor encoder modified	
	Bit 1	Manual test mode active	1 = manual test mode active.
	Bit 2	Manual control active	1 = manual control active.
	Bit 4	Motor encoder = absolute value encoder	-
	Bit 5	Motor encoder absolute position available	
	Bit 6	DC braking active	1 = DC braking active.
	Bit 7	Motor encoder angle drift invalid	-
	Bit 8	Load encoder modified	
	Bit 9	Load encoder angle drift invalid	
	Bit 10	Load encoder = absolute value encoder	
	Bit 11	Load encoder absolute position available	
	Bit 12	Brake open	
	Bit 13	Cable check active	
	Bit 14	Mains failure detected	
0x284F	Current error • Read only		Test display of the current error. • This object contains a reference for the text to be displayed from the ESI file as well as the substitution values for all wildcards in this text. • The text has the same structure as the diagnostic messages in the history buffer.
0x603F	Error code • Read only		Error message
	Bit 0		

19.3.2 Motor diagnostics

The following parameters supply some information about the current operating status of the motor.

Parameter

Address	Name / setting range / [default setting]		Information
0x2832	Identification status • Read only		Display of the status for the automatic identification of the motor parameters.
	Bit 0	Identification enabled	Parameters for interaction with engineering tools.
	Bit 1	Identification active	
	Bit 2	Identification completed	
	Bit 3	Identification failed	
0x2D82	Motor actual voltage (Veff) • Read only: x.x V		Display of the current motor voltage.
0x2D83:001	Motor-Phasenströme: Zero system current • Read only: x.xx A		Display of the zero current.
0x2D83:002	Motor-Phasenströme: Phase U current • Read only: x.xx A		Display of the current of phase U.
0x2D83:003	Motor-Phasenströme: Phase V current • Read only: x.xx A		Display of the current of phase V.
0x2D83:004	Motor-Phasenströme: Phase W current • Read only: x.xx A		Display of the current of phase W.
0x2D8A	Actual speed error • Read only: x rpm		Display of the speed error.
0x6404	Motor manufacturer ["**Lenze**"]		Setting of the motor manufacturer.

19.3.3 Network diagnostics

The following parameters show some general information with regard to the network option available and the network.

Parameter

Address	Name / setting range / [default setting]		Information
0x231F:001	Communication module ID: Active module ID • Read only		Display of the network options currently configured in the device.
	48	No network	
	67	CANopen	
	71	EtherNet/IP	
	82	PROFINET	
	84	EtherCAT	
0x231F:002	Communication module ID: Module ID connected • Read only		Display of the network options currently available in the device.
	48	No network	
	67	CANopen	
	71	EtherNet/IP	
	82	PROFINET	
	84	EtherCAT	

Related topics

▸ Configuring the network 🕮 308

19.3.4 I/O diagnostics

This section describes the diagnostics of the analog and digital inputs and outputs that can be found on the control terminal X3.

19.3.4.1 Digital inputs and outputs

The following parameters serve to diagnose the digital inputs and outputs of the inverter.

Parameter

Address	Name / setting range / [default setting]		Information
0x282C:001	I/O diagnostic: Application level of the digital inputs • Read only		This parameter indicates the bit coded state or the digital inputs contain the setting of 0x2632:001 (Digital input 1).
	Bit 16	Digital input 1	
	Bit 17	Digital input 2	
	Bit 18	Digital input 3	
	Bit 19	Digital input 4	
	Bit 20	Digital input 5	
	Bit 21	Digital input 6	
	Bit 22	Digital input 7	
	Bit 23	Digital input 8	
	Bit 24	Digital input 9	
0x282C:002	I/O diagnostic: Digital output levels • Read only		
	Bit 16	Level of digital output 1	
	Bit 17	Level of digital output 2	
	Bit 18	Level of digital output 3	
	Bit 19	Level of digital output 4	
	Bit 20	Level of digital output 5	
	Bit 21	Level of digital output 6	
0x60FD	Digital input status • Read only		Bit coded display of the current status of the digital inputs
	Bit 0	Reserved	-
	Bit 1	Reserved	
	Bit 2	Reserved	
	Bit 3	Reserved	
	Bit 16	Digital input 1	0 ≡ LOW level, 1 ≡ HIGH level.
	Bit 17	Digital input 2	
	Bit 18	Digital input 3	
	Bit 19	Digital input 4	
	Bit 20	Digital input 5	
	Bit 21	Digital input 6	
	Bit 22	Digital input 7	
	Bit 23	Digital input 8	
	Bit 24	Digital input 9	
0x60FE:001	Digital outputs: Digtal output status 0x00000000 ... [**0x00000000**] ... 0xFFFFFFFF		
	Bit 0	n/a	
	Bit 16	Digital output 1	
	Bit 17	Level for digital output 2	
	Bit 18	Level for digital output 3	
	Bit 19	Level for digital output 4	
	Bit 20	Level for digital output 5	
	Bit 21	Level for digital output 6	

Address	Name / setting range / [default setting]	Information
0x4016:005	Digital output 1: Terminal state • Read only	Display of the logic state of output terminal X3/DO1.
	0 FALSE	
	1 TRUE	

Related topics

▸ Configure digital inputs 🕮 297

▸ Configure digital outputs 🕮 302

19.3.4.2 Analog inputs and outputs

The following parameters serve to diagnose the analog inputs and outputs of the inverter.

Parameter

Address	Name / setting range / [default setting]	Information
0x2DA4:001	Diagnostics of analog input 1: Value in percent • Read only: x.x %	Display of the current input value at X3/AI1 scaled as value in percent. • 100 % = 10 V or 20 mA or 5 V
0x2DA4:016	Diagnostics of analog input 1: Status • Read only	Bit coded display of the status of analog input 1 (X3/AI1).
	Bit 0 Mode 0: 0 ... 10 VDC active	
	Bit 3 Mode 3: -10 ... 10 VDC active	
	Bit 4 Mode 4: 4 ... 20 mA active	
	Bit 5 Mode 5: 0 ... 20 mA active	
	Bit 6 24 V supply OK	
	Bit 7 Calibration successful	
	Bit 9 Input current too low (mode 4)	
	Bit 10 Input voltage too low (mode 2)	
	Bit 11 Input voltage too high (mode 4)	

Related topics

▸ Configure analog inputs 🕮 300

19.3.5 Diagnostics of the application

Parameter

Address	Name / setting range / [default setting]	Information
0x5810:001	Application diagnostics: Application state • Read only	Display of the application status.
	0 Unknown/application missing	
	1 Running	
	2 Stopped	
	3 Stopped at breakpoint	

19.3.6 Service life diagnostics

The following parameters provide some information about the use of the inverter.

This includes the following information:

- Operating and power-on time of the inverter/control unit
- Operating time of the internal fan
- Number of switching cycles of the mains voltage
- Number of switching cycles of the relay
- Number of short-circuits and earth faults that have occurred
- Display of the number of "Clamp responded too often" errors that have occurred.

Parameter

Address	Name / setting range / [default setting]	Information
0x2D81:001	Life-diagnosis: Operating time • Read only: x s	Display showing for how long the device has been running so far (device status “operation enabled”).
0x2D81:002	Life-diagnosis: Power-on time • Read only: x s	Display showing for how long the device has been supplied with line voltage so far.

Address	Name / setting range / [default setting]	Information
0x2D81:004	Life-diagnosis: Main switching cycles • Read only	Display of the number of switching cycles of the mains voltage.
0x2D81:006	Life-diagnosis: Short-circuit counter • Read only	Display of the number of short circuits that have occurred.
0x2D81:007	Life-diagnosis: Earth fault counter • Read only	Display of the number of earth faults that have occurred.
0x2D81:009	Life-diagnosis: Fan operating time • Read only: x s	Display showing for how long the internal fan has been running so far.

19.3.7 Device identification

The following parameters show some general information about the inverter.

Parameter

Address	Name / setting range / [default setting]	Information
0x2000:001	Device data: Product code • Read only	Product code of the complete device.
0x2000:002	Device data: Serial number • Read only	Serial number of the complete device. Example: "00000000000000000XYZXYZ"
0x2000:003	Device data: Production date • Read only	The date of manufacture and the time of the device, e. g. "2013-03-13 11: 59: 04".
0x2000:004	Device data: CU firmware version • Read only	Firmware version of the control unit. Example: "01.00.01.00"
0x2000:006	Device data: CU bootloader version • Read only	Bootloader version of the control unit. Example: "2015.10-20180517"
0x2000:008	Device data: Object directory version • Read only	Example: "108478"
0x2000:015	Device data: Communication firmware revision number • Read only	Firmware version of the network option.
0x2000:019	Device data: Safety module version • Read only	
0x2002:001	Device module: Safety module • Read only	Display of a generated string based on the connected safety module (e. g. "E50SM").
0x2002:006	Device module: CU serial number • Read only	Serial number of the control unit.
0x2002:007	Device module: PU serial number • Read only	Serial number of the power unit.
0x2002:010	Device module: Type communication module • Read only	Display of the type designation of the communication module.
0x2002:011	Device module: Serial number communication module • Read only	Display of the serial number of the communication module.
0x2002:012	Device module: Hardware version communication module • Read only	Display of the hardware version of the communication module.
0x2002:013	Device module: Type encoder 1 • Read only	Display of the type designation of the encoder 1.
0x2002:014	Device module: Serial number encoder 1 • Read only	Display of the serial number of the encoder 1.
0x2002:015	Device module: Hardware version encoder 1 • Read only	Display of the hardware version of the encoder 1.
0x2002:016	Device module: Type encoder 2 • Read only	Display of the type designation of the encoder 2.
0x2002:017	Device module: Serial number encoder 2 • Read only	Display of the serial number of the encoder 2.
0x2002:018	Device module: Hardware version encoder 2 • Read only	Display of the hardware version of the encoder 2.
0x67FF	Device profile number • Read only	

19.4 Event handling

The inverter has various monitoring functions that protect the drive against impermissible operating conditions.

If monitoring functions respond, events with different levels of severity are triggered.

19.4.1 Severity

The severity of an event determines the response of the inverter.

The events are logged in different places.

Severity	Response	Reset required
No response	• The event does not trigger a response in the inverter. • The running process is not affected.	-
Information	• The event does not trigger a response in the inverter. • The running process is not affected. • Logbook entry only.	-
Warning	• The 'Warning' status is set. • The running process is not affected. • If the event is no longer active, the warning is automatically reset.	-
Warning locked	• The 'Warning' status is set. • The running process is not affected. • If the event is no longer active, the warning must be actively reset.	●
Error > logbook entry only	• The 'Error' status is set. • The running process is not affected. • Logbook entry only. • Response by external devices possible.	●
Error > application quick stop > quick stop	• The 'Error' status is set. • The drive is brought to a standstill with the quick stop ramp of the application. • The inverter remains enabled during standstill.	●
Error > inverter quick stop > quick stop	• The 'Error' status is set. • The drive is brought to a standstill with the quick stop ramp of the inverter. • The inverter remains enabled during standstill.	●
Error > inverter quick stop > inverter disabled	• The 'Error' status is set. • The drive is brought to a standstill with the quick stop ramp of the inverter. • The inverter is disabled during standstill. • The motor has no torque. • When the automatic brake is activated, a brake controlled by the inverter is applied.	●
Error > CiA402	In case of serious errors: • The 'Error' status is set. • The inverter is disabled immediately. • The motor has no torque. • When the automatic brake is activated, a brake controlled by the inverter is applied.	●
	In case of slight errors: • In 0x605E a transition response can be set. • The 'Fault reaction active' status is set as long as the transition response is active. When the standstill is reached or the timeout time has expired: • The 'Error' status is set. • The inverter is disabled immediately. • The motor has no torque. • When the automatic brake is activated, a brake controlled by the inverter is applied.	●
Error > inverter disabled	• The 'Error' status is set. • The inverter is disabled immediately. • The motor has no torque. • When the automatic brake is activated, a brake controlled by the inverter is applied.	●

Logging

Severity	Display in CiA status word 0x6041	Display in event monitor 0x2010:002	Display in Engineering Tool	Logbook entry
No response	-	0	-	-
Information	-	11	●	●
Warning	Bit 7 = 1	2	●	●
Warning locked	Bit 7 = 1	13	●	●
Error > logbook entry only	Bit 3 = 1	18	●	●
Error > application quick stop > quick stop	Bit 3 = 1	19	●	●
Error > inverter quick stop > quick stop	Bit 3 = 1	20	●	●
Error > inverter quick stop > inverter disabled	Bit 3 = 1	21	●	●
Error > CiA402	Bit 3 = 1	1	●	●
Error > inverter disabled	Bit 3 = 1	23	●	●

19.4.2 Configuring the severity

For certain events, the severity level can be configured via parameters.

This allows the response to be adapted to the application.

In the overview of event IDs you will find the preset for each and, if necessary, the parameter with which you can adjust the severity. ▸ Event ID overview

19.4.3 Configuring the transition response for minor faults

For slight errors, a transition response can be set before the 'Error' status is set.

Slight errors are predefined and cannot be changed by the user.

The transition response is active until standstill is reached or the timeout time has elapsed.

The inverter can still control the motor in a controlled manner.

List of defined slight errors

Event ID		Event	Severity	Configurable in
537478016	0x20094380	Fault - Motor temperature sensor	Fault > CiA402	0x2D49:002
537490179	0x20097303	Fault - Motor feedback	Fault > CiA402	0x2C45
537490304	0x20097380	Motor encoder - Communication error	Fault > CiA402	0x2C41:004
537526018	0x2009FF02	Fault - Motor holding brake	Fault > CiA402	0x2820:006
537526096	0x2009FF50	General error (see manual)	Fault	-
805405057	0x30018181	EtherCAT - Communication error	Fault > CiA402	0x285B:001
805406464	0x30018700	EtherCAT - Sync error	Fault	-
805406465	0x30018701	Sync PLL - Time-out	Fault	-

Parameter

Address	Name / setting range / [default setting]		Information
0x605E	CiA: Response to minor faults		Set the transition response for slight errors. List of minor faults: ▸ Configuring the transition response for minor faults
	-2	**Advanced quick stop**	If possible, the motor is brought to a standstill with the "quick stop" function. If this is not possible (e.g. in the event of an encoder error), a braking torque is generated with reverse current braking or short-circuit braking.
	0	No transition response	The motor is no longer energized.
	2	Quick stop	The motor is brought to a standstill with the "quick stop" function.
0x2826	Timeout for error response 0 ... [**4**] ... 100 s		If the transition reaction specified in CiA: Response to minor faults is not completed within this time, the inverter changes to the 'Error' state. The motor is no longer energized. When the automatic brake is activated, a brake controlled by the inverter is applied. ▸ 0x2820:001

19.4.4 Event reset

Depending on the severity of the event, the event must be reset so that inverter operation can continue.

Resetting is possible only when the cause of triggering the event has been eliminated.

Options to reset events:

- Via buttons in the Engineering Tools in the "Diagnostics" tab
- Via network with bit 7 in CiA 402 control word 0x6040
- Via parameter 0x2841

Notes:

- Certain events can only be reset by mains switching.
- Certain events (e. g. earth fault or short circuit of the motor phases) may cause a blocking time.
  - The error can be reset only after the blocking time has elapsed.
  - An active blocking time is displayed via bit 14 in the inverter status word. 0x2831.
- Details: ▸ Causes and remedies

Parameter

Address	Name / setting range / [default setting]		Information
0x2840	Error reset time • Read only: x ms		Display of the remaining blocking time until the event can be reset.
0x2841	Reset error 0 ... [**0**] ... 1		1 = reset error
0x2022:035	Device commands: Restart Device		Parameter for interaction with engineering tools. • When the device command has been executed successfully, the value 0 is shown. • While the device command is being executed, do not switch off the supply voltage and do not remove the memory module!
	0	**Off / ready**	Only status feedback
	1	On / start	Execute device command
	2	In progress	Only status feedback
	3	Action cancelled	
	4	No access	
	5	No access (Device disabled)	

19.5 Events, causes and remedies

19.5.1 Event ID overview

The following table contains the most important event IDs of the device in ascending order.

- Clicking the event ID shows you a detailed description of the event.
- If the device displays an "internal event" that is not listed here, restart the device. If the event persists, make a note of the event ID and contact the manufacturer.

Event ID		Event	Severity	Configurable in
0	0x00000000	No error	Information	-
537469728	0x20092320	Short circuit or earth leakage at the motor end	Fault	-
537469760	0x20092340	Short circuit at the motor end	Fault	-
537469777	0x20092351	Motor utilization too high (i^2xt)	Fehler > CiA402	0x2D50:001
537469824	0x20092380	Trouble - utilization of the power section (ixt) too high	Fault	-
537469825	0x20092381	Warning - Utilization of the power section (ixt) too high	Warning	-
537469826	0x20092382	Fault - Device utilization (ixt) too high	Fault	-
537469827	0x20092383	Warning - Device utilization (ixt) too high	Warning	-
537469828	0x20092384	Ultimate motor current reached	Fault > CiA402	0x2D46:002
537469829	0x20092385	Parameterized max. motor current > max. device current	Warning	-
537469830	0x20092386	Clamp is active	Warning	-
537469831	0x20092387	Clamp responded too often	Fault	-
537469833	0x20092389	Warning - device utilization (ixt) too high	Warning	-
537469835	0x2009238B	Trouble - Device utilization (ixt) too high	Fault	-
537473409	0x20093181	Mains failure	Fault	-
537473552	0x20093210	Fault - DC bus overvoltage	Fault	-
537473568	0x20093220	Fault - DC bus undervoltage	Trouble	-
537477648	0x20094210	Fault - Power unit overtemperature	Fault	-
537477760	0x20094280	Fault - Heat sink temperature sensor	Fault	-
537477761	0x20094281	Heat sink fan warning	Warning	-
537477762	0x20094282	Thermal overload of control unit	Information	-
537477904	0x20094310	Motor overtemperature	Fault > CiA402	0x2D49:002
537478016	0x20094380	Fault - Motor temperature sensor	Fault > CiA402	0x2D49:002
537478017	0x20094381	Error - Motor temperature monitoring (PTC)	Fault > CiA402	0x2D48:002
537478018	0x20094382	Motor overtemperature (load encoder/master encoder)	Fault > CiA402	0x2D49:002
537478019	0x20094383	Motor temperature sensor error (load encoder/master encoder)	Fault > CiA402	0x2D49:002
537481490	0x20095112	External supply voltage critical	Warning	-
537485328	0x20096010	Internal error	Warning	-
537485706	0x2009618A	Warning - Internal fan	Warning	-
537486096	0x20096310	Incorrect parameter set download	Warning	-
537486112	0x20096320	Parameter error in object	Warning	-
537489537	0x20097081	Fault - Analog input 1	No response	0x2636:010
537489697	0x20097121	Fault - Pole position identification	Fault	-
537490179	0x20097303	Fault - Motor feedback	Fault > CiA402	0x2C45
537490180	0x20097304	Error - Load encoder/master encoder	Fault > CiA402	0x2C55
537490304	0x20097380	Motor encoder - Communication error	Fault > CiA402	0x2C41:004
537490305	0x20097381	Motor encoder - wrong absolute value because motor speed is too high	Fault > CiA402	0x2C41:004
537490306	0x20097382	Load encoder/master encoder - Communication error	Fault > CiA402	0x2C51:004
537490307	0x20097383	Load encoder/master encoder - wrong absolute value because motor speed is too high	Fault > CiA402	0x2C51:004
537526016	0x2009FF00	Fatal internal error	Fault	-
537526017	0x2009FF01	Fatal internal communication error	Fault	-
537526018	0x2009FF02	Fault - Motor holding brake	Fault > CiA402	0x2820:006
537526019	0x2009FF03	Fatal internal error - task overflow	Fault	-
537526020	0x2009FF04	PPI - Motor movement too large	Fault > CiA402	0x2C60
537526021	0x2009FF05	Safe torque off (STO) activated	Warning	-

Event ID		Event	Severity	Configurable in
537526022	0x2009FF06	Motor overspeed	Fault > CiA402	0x2D44:002
537526023	0x2009FF07	Not permitted during identification or in test mode	Warning	-
537526024	0x2009FF08	Not permitted during identification	Warning	-
537526025	0x2009FF09	Motor phase missing	No response	0x2D45:001 0x2D45:004
537526026	0x2009FF0A	Motor phase failure phase U	No response	0x2D45:001 0x2D45:004
537526027	0x2009FF0B	Motor phase failure phase V	No response	0x2D45:001 0x2D45:004
537526028	0x2009FF0C	Motor phase failure phase W	No response	0x2D45:001 0x2D45:004
537526029	0x2009FF0D	No resolver connected - command cannot be executed	Warning	-
537526030	0x2009FF0E	Speed too low - command cannot be executed	Warning	-
537526031	0x2009FF0F	No resolver as motor encoder connected - command cannot be executed	Warning	-
537526032	0x2009FF10	Time-out during resolver identification	Warning	-
537526033	0x2009FF11	Numeric problem during resolver identification	Warning	-
537526034	0x2009FF12	Inverter error too large	Warning	-
537526035	0x2009FF13	Identification aborted	Fault > CiA402	0x2C60
537526036	0x2009FF14	Not permitted in state 'operation enabled' or 'quick stop active'	Warning	-
537526037	0x2009FF15	No HIPERFACE® absolute value encoder as motor encoder connected - command cannot be executed	Warning	-
537526038	0x2009FF16	Connected HIPERFACE® motor encoder is not supported	Fault > CiA402	0x2C41:004
537526039	0x2009FF17	Connected HIPERFACE® motor encoder is not supported - command cannot be executed	Warning	-
537526040	0x2009FF18	Communication time-out in manual control mode	Fault	-
537526041	0x2009FF19	Motor parameter identification fault	Fault	-
537526042	0x2009FF1A	Connected HIPERFACE® load encoder/master encoder is not supported	Fault > CiA402	0x2C51:004
537526043	0x2009FF1B	Connected HIPERFACE® load encoder/master encoder is not supported - command cannot be executed	Warning	-
537526044	0x2009FF1C	No resolver as load encoder/master encoder connected - command cannot be executed	Warning	-
537526045	0x2009FF1D	No HIPERFACE® absolute value encoder as load encoder/master encoder connected - command cannot be executed	Warning	-
537526046	0x2009FF1E	FIQ runtime error	Fault	-
537526048	0x2009FF20	Brand protection - check failed	Warning	-
537526049	0x2009FF21	Time-out holding brake feedforward control	Fault	-
537526050	0x2009FF22	Velocity error	Fault	-
537526051	0x2009FF23	Position error	Fault	-
537526054	0x2009FF26	Cable check - Motor movement too large	Fault	-
537526055	0x2009FF27	Cable check - Wrong motor angle detected	Fault	-
537526070	0x2009FF36	Warning - Brake resistor overload	Warning	-
537526080	0x2009FF40	Error - Brake transistor	Fault	-
537526081	0x2009FF41	Error - Charging circuit	Fault	-
537526082	0x2009FF42	Mains phase failure	Fault	-
537526096	0x2009FF50	General error (see manual)	Fault	-
537526097	0x2009FF51	Internal communication to PLC failed	Fault	-
671158529	0x28011101	Initialization - Parameter value could not be written	Information	-
671158530	0x28011102	Load default setting - Parameter value could not be written	Warning	-
671158785	0x28011201	Parameters - Initialization failed	Warning	-
671158786	0x28011202	Parameters - Loading default values failed	Warning	-
671158787	0x28011203	Parameters - Loading TA default values failed	Warning	-
671159298	0x28011402	Opening the parameter description failed	Fault	-
671159299	0x28011403	Opening the parameter set failed	Fault	-
671219713	0x28020001	Logbook: Corrupt restore data	Information	-
671219773	0x2802003D	Logbook cleared	Information	-

Event ID		Event	Severity	Configurable in
671219776	0x28020040	Logbook: Timeout restoring data	Information	-
671219777	0x28020041	Logbook: Error restoring data	Information	-
671219778	0x28020042	First boot with this firmware version	Information	-
671219779	0x28020043	Logbook was restored.	Information	-
671219780	0x28020044	Logbook: Error reading persistent data.	Information	-
671263317	0x2802AA55	The chronology of the logbook is not consistent	Information	-
671354881	0x28041001	CmpLenzeErrorManagementAccess loaded without errors	Information	-
671420673	0x28051101	Test-Mode - More Application Credit required, application is starting delayed	Warning	-
671420674	0x28051102	Application-Credit - Invalid license data	Warning	-
671420675	0x28051103	Application-Credit - License data missing	Warning	-
671421185	0x28051301	Boot application - More Application Credit required	Warning	-
671809799	0x280B0107	Application was downloaded.	Information	-
704663680	0x2A005080	Internal error - AIS	Warning	-
704663681	0x2A005081	Internal error - AIE	Warning	-
704663682	0x2A005082	Internal error - Button S82	Warning	-
704663691	0x2A00508B	SD-Inx/CLx - Error	Warning	-
704663692	0x2A00508C	Internal switch-off path - Error	Warning	-
704663693	0x2A00508D	Internal switch-off path - Test pulse error	Warning	-
704663828	0x2A005114	Reference voltage error	Warning	-
704663829	0x2A005115	6 V voltage error	Warning	-
704663830	0x2A005116	5 V voltage error	Warning	-
704663831	0x2A005117	3.3 V voltage error	Warning	-
704668032	0x2A006180	Internal error - STO activated	Warning	-
704668037	0x2A006185	Communication error - Basic device	Warning	-
704668038	0x2A006186	Synchronization error - Basic device	Information	-
704668544	0x2A006380	F-parameter error	Information	-
704668545	0x2A006381	F_Dest_Add unequal F-address	Information	-
704668546	0x2A006382	F_Dest_Add = 0 or FFFFhex	Information	-
704668547	0x2A006383	F_Source_Add = 0 or FFFFhex	Information	-
704668549	0x2A006385	F_SIL exceeds technical SIL	Information	-
704668550	0x2A006386	F_CRC_Length error	Information	-
704668551	0x2A006387	Wrong F-parameter version	Information	-
704668553	0x2A006389	New safety parameter set deleted	Information	-
704668554	0x2A00638A	New safety parameter set loaded	Information	-
704668555	0x2A00638B	Memory module - Access error	Warning	-
704668556	0x2A00638C	Different safety parameter sets	Warning	-
704668557	0x2A00638D	Extended Safety - No safety parameter set	Warning	-
704668558	0x2A00638E	Extended Safety - Safety parameter set defect	Warning	-
704668560	0x2A006390	Safety parameter set - Plausibility error	Warning	-
704668561	0x2A006391	Safety parameter set - Communication error	Warning	-
704668562	0x2A006392	Different safety addresses detected	Warning	-
704668563	0x2A006393	SSM - Wrong PDO version	Warning	-
704676234	0x2A00818A	PROFIsafe passivated	Information	-
704676235	0x2A00818B	PROFIsafe has left data exchange	Information	-
704676237	0x2A00818D	PROFIsafe - CRC1 error	Information	-
704676245	0x2A008195	FSoE - Unexpected command	Information	-
704676246	0x2A008196	FSoE - Unknown command	Information	-
704676247	0x2A008197	FSoE - Invalid connection ID	Information	-
704676248	0x2A008198	FSoE - CRC error	Information	-
704676249	0x2A008199	FSoE - Watchdog expired	Information	-
704676252	0x2A00819C	FSoE - Invalid communication parameter data	Information	-
704676253	0x2A00819D	FSoE - Invalid application parameter length	Information	-
704676254	0x2A00819E	FSoE - Invalid application parameter data	Information	-
704676255	0x2A00819F	FSoE - Passivated	Information	-

Event ID		Event	Severity	Configurable in
704676264	0x2A0081A8	FSoE - Invalid slave address	Information	-
704676265	0x2A0081A9	FSoE - Invalid communication parameter length	Information	-
704676266	0x2A0081AA	FSoE - Data exchange left	Information	-
704680064	0x2A009080	Discrepancy check or function check error - SD-In1	Warning	-
704680065	0x2A009081	Discrepancy check or function check error - SD-In2	Warning	-
704680066	0x2A009082	Discrepancy check or function check error - SD-In3	Warning	-
704680067	0x2A009083	Discrepancy check or function check error - SD-In4	Warning	-
704680069	0x2A009085	Disabled SD-In2 = HIGH	Warning	-
704680070	0x2A009086	Disabled SD-In3 = HIGH	Warning	-
704680071	0x2A009087	Disabled SD-In4 = HIGH	Warning	-
704680072	0x2A009088	SD-Out1 - Channel A remains stuck at HIGH	Warning	-
704680073	0x2A009089	SD-Out1 - Channel A remains stuck at LOW	Warning	-
704680074	0x2A00908A	SD-Out1 - Channel B remains stuck at HIGH	Warning	-
704680075	0x2A00908B	SD-Out1 - Channel B remains stuck at LOW	Warning	-
704680076	0x2A00908C	SD-In1 - Channel A remains stuck at HIGH	Warning	-
704680077	0x2A00908D	SD-In1 - Channel B remains stuck at HIGH	Warning	-
704680078	0x2A00908E	SD-In2 - Channel A remains stuck at HIGH	Warning	-
704680079	0x2A00908F	SD-In2 - Channel B remains stuck at HIGH	Warning	-
704680080	0x2A009090	SD-In3 - Channel A remains stuck at HIGH	Warning	-
704680081	0x2A009091	SD-In3 - Channel B remains stuck at HIGH	Warning	-
704680082	0x2A009092	SD-In4 - Channel A remains stuck at HIGH	Warning	-
704680083	0x2A009093	SD-In4 - Channel B remains stuck at HIGH	Warning	-
704680084	0x2A009094	CLA/CLB - Short circuit	Warning	-
704708488	0x2A00FF88	SS1/SS2 - Stop time exceeded	Warning	-
704708489	0x2A00FF89	SLS1 - Nlim1 exceeded	Warning	-
704708490	0x2A00FF8A	SLS2 - Nlim2 exceeded	Warning	-
704708491	0x2A00FF8B	SLS3 - Nlim3 exceeded	Warning	-
704708492	0x2A00FF8C	SLS4 - Nlim4 exceeded	Warning	-
704708493	0x2A00FF8D	SLS/SMS - Error stop not executed	Warning	-
704708494	0x2A00FF8E	SDIpos - Wrong direction	Warning	-
704708495	0x2A00FF8F	SDIneg - Wrong direction	Warning	-
704708496	0x2A00FF90	SMS - Nmax exceeded	Warning	-
704708497	0x2A00FF91	SOS - Tolerance limit exceeded	Warning	-
704708498	0x2A00FF92	No feedback system configured	Warning	-
704708499	0x2A00FF93	CAS - Round trip time exceeded	Warning	-
704708500	0x2A00FF94	CAS - Hardware or discrepancy error	Warning	-
704708501	0x2A00FF95	SS1/SS2 - Speed ramp exceeded	Warning	-
704708502	0x2A00FF96	SLI - Safely limited increment exceeded	Warning	-
704708503	0x2A00FF97	SLP1 - Position limits exceeded	Warning	-
704708504	0x2A00FF98	SLP2 - Position limits exceeded	Warning	-
704708505	0x2A00FF99	SLP3 - Position limits exceeded	Warning	-
704708506	0x2A00FF9A	SLP4 - Position limits exceeded	Warning	-
704708507	0x2A00FF9B	SLP - No home position	Warning	-
704708509	0x2A00FF9D	PDSS - Velocity exceeded	Warning	-
704708510	0x2A00FF9E	PDSS - Creep velocity SCS exceeded	Warning	-
704708511	0x2A00FF9F	PDSS - No diagnostic mark detected	Warning	-
704708512	0x2A00FFA0	PDSS - Diagnostic mark detected at invalid position	Warning	-
704708518	0x2A00FFA6	SHom - Time-out	Warning	-
704708519	0x2A00FFA7	SHom - Home position deleted	Information	-
704708520	0x2A00FFA8	SHom - Maximum slip value exceeded	Warning	-
704708521	0x2A00FFA9	SHom - Tolerance of start position exceeded	Warning	-
704708522	0x2A00FFAA	SHom - Tolerance of position comparison exceeded	Warning	-
704708523	0x2A00FFAB	SSM - Invalid safe velocity	Warning	-
704708524	0x2A00FFAC	SSM - Encoder error	Warning	-
704708525	0x2A00FFAD	SSM - Resolver error	Warning	-

Event ID		Event	Severity	Configurable in
704708526	0x2A00FFAE	SSM - Error in standard device data	Warning	-
704708527	0x2A00FFAF	SSM - Speed deviation too high	Warning	-
704708528	0x2A00FFB0	SSM - Synchronization error	Warning	-
738214504	0x2C004268	Modulo axis is required	Fault	-
738214507	0x2C00426B	Start position outside cycle length	Fault	-
738214508	0x2C00426C	Different cycle lengths	Fault	-
738214509	0x2C00426D	Invalid direction of rotation	Fault	-
738214510	0x2C00426E	Mark stack - Limit reached	Fault	-
738214511	0x2C00426F	Number of virtual marks exceeded	Fault	-
738214512	0x2C004270	Invalid synchronization parameters	Fault	-
738214513	0x2C004271	Invalid parameter setting for jogging	Fault	-
738214514	0x2C004272	Invalid deceleration ramp for stop function (lrStopDec <= 0)	Fault	-
738214515	0x2C004273	Invalid diameter	Fault	-
738214516	0x2C004274	Torque follower not cannot be activated	Fault	-
738214517	0x2C004275	Speed follower cannot be activated	Fault	-
738214518	0x2C004276	Invalid AxisRef connected to function	Fault	-
738214519	0x2C004277	Motor parameters could not be read	Fault	-
738214520	0x2C004278	Lower speed limit parameter is not mapped	Fault	-
738214521	0x2C004279	Upper speed limit parameter is not mapped	Fault	-
738214522	0x2C00427A	Torque setpoint parameter is not mapped	Fault	-
738214523	0x2C00427B	Dancer position outside the defined range	Fault	-
738214524	0x2C00427C	Dancer limits are invalid	Fault	-
738214525	0x2C00427D	Invalid parameter setting for clutch	Fault	-
738214526	0x2C00427E	TM was not called cyclic	Fault	-
738214534	0x2C004286	Invalid number of cam points	Fault	-
738214604	0x2C0042CC	Clutching not possible (master axis is moving)	Fault	-
738214605	0x2C0042CD	Invalid parameter setting of product length	Fault	-
738214606	0x2C0042CE	Position of the touch probe sensor unknown	Fault	-
738214607	0x2C0042CF	Gap occurred in the slave axis	Fault	-
738214608	0x2C0042D0	Gap occurred in the master axis	Fault	-
738214609	0x2C0042D1	Internal error	Fault	-
738214610	0x2C0042D2	Invalid parameter setting of synchronous phase	Fault	-
738214611	0x2C0042D3	Invalid parameter setting of the cross cutter for cutting operation	Fault	-
738214612	0x2C0042D4	Invalid parameter setting of cutting length	Fault	-
738214613	0x2C0042D5	Slave axis outside parking position	Fault	-
738214614	0x2C0042D6	Master axis changes the direction of rotation	Fault	-
738214615	0x2C0042D7	Internal - Invalid cam selected	Fault	-
738214616	0x2C0042D8	Selected axis is not supported	Fault	-
738214617	0x2C0042D9	Axis is not supported	Fault	-
738214618	0x2C0042DA	Invalid parameter setting of profile	Fault	-
738214619	0x2C0042DB	Axis enabled is required	Fault	-
738214620	0x2C0042DC	Correction window out of cycle length measuring system	Fault	-
738214621	0x2C0042DD	Correction value larger than correction window	Fault	-
738214627	0x2C0042E3	Dancer limits not teached	Fault	-
738214629	0x2C0042E5	Position of the slave axis is greater than the upper limit set	Fault	-
738214630	0x2C0042E6	Position of the slave axis is smaller than the lower limit set	Fault	-
738214631	0x2C0042E7	Target position is greater than the upper limit set	Fault	-
738214632	0x2C0042E8	Invalid mark position	Fault	-
738214633	0x2C0042E9	Invalid positioning	Fault	-
738214644	0x2C0042F4	TM not called in cyclic motion task	Fault	-
738214654	0x2C0042FE	Invalid parameters of traversing profile	Fault	-
738214655	0x2C0042FF	Invalid coil parameters	Fault	-
738214656	0x2C004300	Traversing angular shift limit reached	Fault	-
738214658	0x2C004302	DC bus undervoltage	Fault	-
738214659	0x2C004303	Coupling mode supports modulo axes only	Fault	-

Event ID		Event	Severity	Configurable in
738214661	0x2C004305	X axis TM error	Fault	-
738214662	0x2C004306	Y axis TM error	Fault	-
738214668	0x2C00430C	Diameter calculation failed	Fault	-
738214669	0x2C00430D	Actual dancer position greater than maximum dancer position	Fault	-
738214670	0x2C00430E	Parameter lrIdentDiamMaxDancerPos is invalid	Fault	-
738214671	0x2C00430F	Value for stored material in dancer is invalid (=<0)	Fault	-
738214672	0x2C004310	Loading the diameter during identification is not allowed	Fault	-
738214673	0x2C004311	Invalid master axis connected	Fault	-
738214695	0x2C004327	Inversion of gearfactor not allowed. Velocity out of tolerance.	Fault	-
738214696	0x2C004328	AC Drive Profile - Invalid parameter configuration	Fault	-
738214697	0x2C004329	Velocity high limit is lower than velocity low limit	Fault	-
738214698	0x2C00432A	Selected set value mode is not supported	Fault	-
738216504	0x2C004A38	Invalid delay time for PT1 filter	Fault	-
738216506	0x2C004A3A	Invalid mode for curve function	Fault	-
738216507	0x2C004A3B	Invalid compare mode	Fault	-
738216509	0x2C004A3D	Invalid mode ConvAxisV	Fault	-
738216510	0x2C004A3E	Process controller - Invalid delay time	Fault	-
738216511	0x2C004A3F	Process controller - Invalid rate time	Fault	-
738216512	0x2C004A40	Process controller - Invalid reset time	Fault	-
738216528	0x2C004A50	Invalid mode for signal delay	Fault	-
738216534	0x2C004A56	FrictComp - Aborted by restarting identification	Fault	-
738216535	0x2C004A57	FrictComp - Aborted by disabling follower	Fault	-
738216536	0x2C004A58	FrictComp - Max. velocity could not be reached	Fault	-
738216537	0x2C004A59	FrictComp - Acceleration too high	Fault	-
738216538	0x2C004A5A	Min. diameter greater than max. diameter	Fault	-
738216552	0x2C004A68	IdentMInertia - Max. speed or max. torque too high	Fault	-
738216553	0x2C004A69	Aborted by restarting ident identification - IdentMInertia	Fault	-
738216554	0x2C004A6A	IdentMInertia - Aborted by disabling follower	Fault	-
738216555	0x2C004A6B	IdentMInertia - Aborted by other function	Fault	-
738216556	0x2C004A6C	IdentMInertia - Max velocity not reached	Fault	-
738216557	0x2C004A6D	IdentMInertia - Torque not reached	Fault	-
738217007	0x2C004C2F	Mark register - Max. number of TP exceeded	Fault	-
738217305	0x2C004D59	Identification mode not supported	Fault	-
738217307	0x2C004D5B	Motor rated speed =0	Fault	-
738217308	0x2C004D5C	Motor moment of inertia = 0	Fault	-
738217310	0x2C004D5E	Invalid start mode	Fault	-
738217311	0x2C004D5F	Invalid natural frequency	Fault	-
738217312	0x2C004D60	Invalid amplitude ratio	Fault	-
738217313	0x2C004D61	Invalid compensation method	Fault	-
738217314	0x2C004D62	Compensation method cannot be changed	Fault	-
738217505	0x2C004E21	SDO access - General error	Fault	-
738217506	0x2C004E22	SDO access - Invalid index	Fault	-
738217507	0x2C004E23	SDO access - Invalid offset	Fault	-
738217508	0x2C004E24	SDO access - Invalid length	Fault	-
738217509	0x2C004E25	SDO access- Invalid data	Fault	-
738217510	0x2C004E26	SDO access - Not ready	Fault	-
738217511	0x2C004E27	SDO access - Master is busy	Fault	-
738217512	0x2C004E28	SDO access - No memory	Fault	-
738217513	0x2C004E29	SDO access - Invalid state	Fault	-
738217514	0x2C004E2A	SDO access - Invalid status	Fault	-
738217515	0x2C004E2B	SDO access - Time-out	Fault	-
738217516	0x2C004E2C	SDO access - Invalid mailbox commands in current slave state	Fault	-
738217517	0x2C004E2D	SDO access - Cable not connected to the controller	Fault	-
738217519	0x2C004E2F	SDO access - All channels for SDO request busy	Fault	-
738217524	0x2C004E34	SDO - AbortCode 0x05030000 'Toggle bit not alternated'	Fault	-

Event ID		Event	Severity	Configurable in
738217525	0x2C004E35	SDO - AbortCode 0x05040000 'SDO protocol time-out'	Fault	-
738217526	0x2C004E36	SDO - AbortCode 0x05040001 'Client/server command specifier not valid or unknown'	Fault	-
738217527	0x2C004E37	SDO - AbortCode 0x05040002 'Invalid block size (block mode only)'	Fault	-
738217528	0x2C004E38	SDO - AbortCode 0x05040003 'Invalid sequence number (block mode only)'	Fault	-
738217529	0x2C004E39	SDO - AbortCode 0x05040004 'CRC error (block mode only)'	Fault	-
738217530	0x2C004E3A	SDO - AbortCode 0x05040005 'Out of memory'	Fault	-
738217531	0x2C004E3B	SDO - AbortCode 0x06010000 'Unsupported access to an object'	Fault	-
738217532	0x2C004E3C	SDO - AbortCode 0x06010001 'Attempt to read a write only object'	Fault	-
738217533	0x2C004E3D	SDO - AbortCode 0x06010002 'Attempt to write a read only object'	Fault	-
738217534	0x2C004E3E	SDO - AbortCode 0x06020000 'Object does not exist in the object dictionary'	Fault	-
738217535	0x2C004E3F	SDO - AbortCode 0x06040041 'Object cannot be mapped to the PDO'	Fault	-
738217536	0x2C004E40	SDO - AbortCode 0x06040042 'Number and length of objects to be mapped exceed PDO length'	Fault	-
738217537	0x2C004E41	SDO - AbortCode 0x06040043 'General parameter incompatibility'	Fault	-
738217538	0x2C004E42	SDO - AbortCode 0x06040047 'General internal incompatibility in the device'	Fault	-
738217539	0x2C004E43	SDO - AbortCode 0x06060000 'Access failed due to an hardware error'	Fault	-
738217540	0x2C004E44	SDO - AbortCode 0x06070010 'Data type or length of service parameters do not match'	Fault	-
738217541	0x2C004E45	SDO - AbortCode 0x06070012 'Data type does not match, service parameter too high'	Fault	-
738217542	0x2C004E46	SDO - AbortCode 0x06070013 'Data type does not match, service parameter too low'	Fault	-
738217543	0x2C004E47	SDO - AbortCode 0x06090011 'Subindex does not exist'	Fault	-
738217544	0x2C004E48	SDO - AbortCode 0x06090030 'Write access - Parameter value exceeds limits'	Fault	-
738217545	0x2C004E49	SDO - AbortCode 0x06090031 'Write access - Parameter value too high'	Fault	-
738217546	0x2C004E4A	SDO - AbortCode 0x06090032 'Write access - Parameter value too low'	Fault	-
738217547	0x2C004E4B	SDO - AbortCode 0x06090036 'Maximum value less than minimum value'	Fault	-
738217548	0x2C004E4C	SDO - AbortCode 0x08000000 'General error'	Fault	-
738217549	0x2C004E4D	SDO - AbortCode 0x08000020 'Data cannot be transferred to the application/stored in the application'	Fault	-
738217550	0x2C004E4E	SDO - AbortCode 0x08000021 'Local control - 'Data cannot be transferred to the application/stored in the application'	Fault	-
738217551	0x2C004E4F	SDO - AbortCode 0x08000022 Actual device state - Data cannot be transferred to the application/stored in the application'	Fault	-
738217552	0x2C004E50	SDO - AbortCode 0x08000023 'Object dictionary - Dynamic generation fails or object dictionary is missing'	Fault	-
738217553	0x2C004E51	SDO - AbortCode 0x 'Unknown abort code'	Fault	-
738217805	0x2C004F4D	Invalid AxisRef	Fault	-
738217806	0x2C004F4E	Input "parameter" not used	Fault	-
738217807	0x2C004F4F	Requested parameter does not exist	Fault	-
738217808	0x2C004F50	Invalid state of the axis	Fault	-
738217809	0x2C004F51	Parameter number does not correspond to a Boolean parameter	Fault	-
738217810	0x2C004F52	Positive SW limit exceeded	Fault	-
738217811	0x2C004F53	Negative SW limit exceeded	Fault	-
738217812	0x2C004F54	Invalid input for source of type MC_Source	Fault	-
738217813	0x2C004F55	No setpoints generated in current PLC cycle	Fault	-
738217814	0x2C004F56	Controller disabled during operation	Fault	-
738217815	0x2C004F57	Motion prohibited by axis state	Fault	-

Event ID		Event	Severity	Configurable in
738217816	0x2C004F58	Positive SW limit reached	Fault	-
738217817	0x2C004F59	Negative SW limit reached	Fault	-
738217818	0x2C004F5A	Touch probe - No valid source	Fault	-
738217819	0x2C004F5B	Touch probe - No valid number	Fault	-
738217820	0x2C004F5C	Touch Probe - Channel is already in use	Fault	-
738217821	0x2C004F5D	Touch Probe - Selection not supported	Fault	-
738217822	0x2C004F5E	No Touch Probe active	Fault	-
738217823	0x2C004F5F	Input for external TP configuration not connected	Fault	-
738217824	0x2C004F60	Invalid acceleration	Fault	-
738217825	0x2C004F61	Invalid deceleration	Fault	-
738217826	0x2C004F62	Invalid velocity	Fault	-
738217827	0x2C004F63	Arithmetic error in profile calculation	Fault	-
738217828	0x2C004F64	Movement cannot be executed with the specified parameters	Fault	-
738217829	0x2C004F65	Velocity - Specified value exceeds parameterized maximum value	Fault	-
738217830	0x2C004F66	Acceleration - Specified value exceeds parameterized maximum value	Fault	-
738217831	0x2C004F67	Jerk - Specified value exceeds parameterized maximum value	Fault	-
738217832	0x2C004F68	Target position outside SW limits	Fault	-
738217834	0x2C004F6A	MoveAbsolute - Invalid acceleration	Fault	-
738217835	0x2C004F6B	MoveAbsolute - Invalid deceleration	Fault	-
738217836	0x2C004F6C	MoveAbsolute - Invalid velocity	Fault	-
738217837	0x2C004F6D	MoveAbsolute - Arithmetic error in profile calculation	Fault	-
738217838	0x2C004F6E	MoveAbsolute - Movement cannot be executed with the specified parameters	Fault	-
738217839	0x2C004F6F	MoveAbsolute - Velocity - Specified value exceeds parameterized maximum value	Fault	-
738217840	0x2C004F70	MoveAbsolute - Acceleration - Specified value exceeds parameterized maximum value	Fault	-
738217841	0x2C004F71	MoveAbsolute - Jerk - Specified value exceeds parameterized maximum value	Fault	-
738217842	0x2C004F72	MoveAbsolute - Target position outside SW limits	Fault	-
738217844	0x2C004F74	MoveAdditive - Invalid acceleration	Fault	-
738217845	0x2C004F75	MoveAdditive - Invalid deceleration	Fault	-
738217846	0x2C004F76	MoveAdditive - Invalid velocity	Fault	-
738217847	0x2C004F77	MoveAdditive - Arithmetic error in profile calculation	Fault	-
738217848	0x2C004F78	MoveAdditive - Movement cannot be executed with the specified parameters	Fault	-
738217849	0x2C004F79	MoveAdditive - Velocity - Specified value exceeds parameterized maximum value	Fault	-
738217850	0x2C004F7A	MoveAdditive - Acceleration - Specified value exceeds parameterized maximum value	Fault	-
738217851	0x2C004F7B	MoveAdditive - Jerk - Specified value exceeds parameterized maximum value	Fault	-
738217852	0x2C004F7C	MoveAdditive - Target position outside the SW limit	Fault	-
738217854	0x2C004F7E	MoveContinuousAbsolute -	Fault	-
738217855	0x2C004F7F	MoveContinuousAbsolute - Invalid deceleration	Fault	-
738217856	0x2C004F80	MoveContinuousAbsolute - Invalid velocity	Fault	-
738217857	0x2C004F81	MoveContinuousAbsolute - Arithmetic error in profile calculation	Fault	-
738217858	0x2C004F82	MoveContinuousAbsolute - Movement cannot be executed with the specified parameters	Fault	-
738217859	0x2C004F83	MoveContinuousAbsolute - Velocity - Specified value exceeds parameterized maximum value	Fault	-
738217860	0x2C004F84	MoveContinuousAbsolute - Acceleration - Specified value exceeds parameterized maximum value	Fault	-
738217861	0x2C004F85	MoveContinuousAbsolute - Jerk - Specified value exceeds parameterized maximum value	Fault	-
738217862	0x2C004F86	MoveContinuousAbsolute - Target position outside SW limits	Fault	-

Event ID		Event	Severity	Configurable in
738217864	0x2C004F88	MoveContinuousRelative - Invalid acceleration	Fault	-
738217865	0x2C004F89	MoveContinuousRelative - Invalid deceleration	Fault	-
738217866	0x2C004F8A	MoveContinuousRelative - Invalid velocity	Fault	-
738217867	0x2C004F8B	MoveContinuousRelative - Arithmetic error in profile calculation	Fault	-
738217868	0x2C004F8C	MoveContinuousRelative - Movement cannot be executed with the specified parameters	Fault	-
738217869	0x2C004F8D	MoveContinuousRelative - Velocity - Specified value exceeds parameterized maximum value	Fault	-
738217870	0x2C004F8E	MoveContinuousRelative - Acceleration - Specified value exceeds parameterized maximum value	Fault	-
738217871	0x2C004F8F	MoveContinuousRelative - Jerk - Specified value exceeds parameterized maximum value	Fault	-
738217872	0x2C004F90	MoveContinuousRelative - Target position outside SW limits	Fault	-
738217874	0x2C004F92	MoveRelative - Invalid acceleration	Fault	-
738217875	0x2C004F93	MoveRelative - Invalid deceleration	Fault	-
738217876	0x2C004F94	MoveRelative - Invalid velocity	Fault	-
738217877	0x2C004F95	MoveRelative - Arithmetic error in profile calculation	Fault	-
738217878	0x2C004F96	MoveRelative - Movement cannot be executed with the specified parameters	Fault	-
738217879	0x2C004F97	MoveRelative - Velocity - Specified value exceeds parameterized maximum value	Fault	-
738217880	0x2C004F98	MoveRelative - Acceleration - Specified value exceeds parameterized maximum value	Fault	-
738217881	0x2C004F99	MoveRelative - Jerk - Specified value exceeds parameterized maximum value	Fault	-
738217882	0x2C004F9A	MoveRelative - Target position outside SW limits	Fault	-
738217884	0x2C004F9C	MoveSuperImposed - Invalid acceleration	Fault	-
738217885	0x2C004F9D	MoveSuperImposed - Invalid deceleration	Fault	-
738217886	0x2C004F9E	MoveSuperImposed - Invalid velocity	Fault	-
738217887	0x2C004F9F	MoveSuperImposed - Arithmetic error in profile calculation	Fault	-
738217888	0x2C004FA0	MoveSuperImposed - Movement cannot be executed with the specified parameters	Fault	-
738217889	0x2C004FA1	MoveSuperImposed - Velocity - Specified value exceeds parameterized maximum value	Fault	-
738217890	0x2C004FA2	MoveSuperImposed - Acceleration - Specified value exceeds parameterized maximum value	Fault	-
738217891	0x2C004FA3	MoveSuperImposed - Jerk - Specified value exceeds parameterized maximum value	Fault	-
738217892	0x2C004FA4	MoveSuperImposed - Target position outside SW limits	Fault	-
738217894	0x2C004FA6	MoveVelocity - Invalid acceleration	Fault	-
738217895	0x2C004FA7	MoveVelocity - Invalid deceleration	Fault	-
738217896	0x2C004FA8	MoveVelocity - Invalid velocity	Fault	-
738217897	0x2C004FA9	MoveVelocity - Arithmetic error in profile calculation	Fault	-
738217898	0x2C004FAA	MoveVelocity - Movement cannot be executed with the specified parameters	Fault	-
738217899	0x2C004FAB	MoveVelocity - Velocity - Specified value exceeds parameterized maximum value	Fault	-
738217900	0x2C004FAC	MoveVelocity - Acceleration - Specified value exceeds parameterized maximum value	Fault	-
738217901	0x2C004FAD	MoveVelocity - Jerk - Specified value exceeds parameterized maximum value	Fault	-
738217902	0x2C004FAE	MoveVelocity - Target position outside SW limits	Fault	-
738217905	0x2C004FB1	Halt - Invalid deceleration	Fault	-
738217907	0x2C004FB3	Halt - Arithmetic error in profile calculation	Fault	-
738217910	0x2C004FB6	Halt - Acceleration - Specified value exceeds parameterized maximum value	Fault	-
738217911	0x2C004FB7	Halt - Jerk - Specified value exceeds parameterized maximum value	Fault	-
738217915	0x2C004FBB	Stop - Invalid deceleration	Fault	-

Event ID		Event	Severity	Configurable in
738217917	0x2C004FBD	Stop - Arithmetic error in profile calculation	Fault	-
738217920	0x2C004FC0	Stop - Acceleration - Specified value exceeds parameterized maximum value	Fault	-
738217921	0x2C004FC1	Stop - Jerk - Specified value exceeds parameterized maximum value	Fault	-
738217934	0x2C004FCE	Invalid direction specified	Fault	-
738217935	0x2C004FCF	Invalid buffer mode specified	Fault	-
738217936	0x2C004FD0	Requested direction not enabled	Fault	-
738217937	0x2C004FD1	Function cannot be executed due to axis status	Fault	-
738217938	0x2C004FD2	Invalid override value	Fault	-
738217939	0x2C004FD3	Concurrent MC_Power for one axis	Fault	-
738217940	0x2C004FD4	Concurrent SetQuickstop for one axis	Fault	-
738218003	0x2C005013	Cyclic PDO interface of drive disabled (0x2824)	Fault	-
738218004	0x2C005014	Positive HW limit exceeded	Fault	-
738218005	0x2C005015	Negative HW limit exceeded	Fault	-
738218006	0x2C005016	Following error - Warning level exceeded	Fault	-
738218007	0x2C005017	Following error - Error level exceeded	Fault	-
738218008	0x2C005018	Communication error to controlled drive	Fault	-
738218009	0x2C005019	Initialization error of the axis data	Fault	-
738218010	0x2C00501A	Communication time-out to controlled drive	Fault	-
738218011	0x2C00501B	EtherCAT could not be restarted	Fault	-
738218012	0x2C00501C	Not ready for re-initialization	Fault	-
738218013	0x2C00501D	Error during initialization	Fault	-
738218014	0x2C00501E	Axis could not be switched on	Fault	-
738218015	0x2C00501F	Drive error	Fault	-
738218016	0x2C005020	Homing - No homing parameters defined	Fault	-
738218017	0x2C005021	Homing - Mode not supported by axis	Fault	-
738218018	0x2C005022	Homing - Mode unknown	Fault	-
738218019	0x2C005023	Homing - No external touch probe configuration	Fault	-
738218020	0x2C005024	Homing - Invalid touch probe configuration	Fault	-
738218022	0x2C005026	Homing - Error writing parameters to the drive	Fault	-
738218023	0x2C005027	Homing - Error in drive during homing	Fault	-
738218024	0x2C005028	Homing - Arithmetic error in profile calculation	Fault	-
738218025	0x2C005029	Homing - Torque limits not mapped	Fault	-
738218026	0x2C00502A	Homing - Invalid velocity or acceleration	Fault	-
738218029	0x2C00502D	Reset of drive error failed	Fault	-
738218033	0x2C005031	Position drift during brake test	Fault	-
738218034	0x2C005032	Invalid brake mode	Fault	-
738218035	0x2C005033	Torque pre-control - Time-out	Fault	-
738218036	0x2C005034	Invalid brake state	Fault	-
738218037	0x2C005035	Fast_IO_OUT - Invalid output selected	Fault	-
738218038	0x2C005036	Fast_IO_OUT - Wrong Axis connected	Fault	-
738218039	0x2C005037	Fast_IO_OUT - Wrong Axis parameter	Fault	-
738218040	0x2C005038	Fast_IO_OUT - Mapping error	Fault	-
738218041	0x2C005039	Fast_IO_OUT - Internal overflow	Fault	-
738218042	0x2C00503A	Touch probe - Invalid channel selection	Fault	-
738218043	0x2C00503B	Touch probe - Invalid mode selection	Fault	-
738218044	0x2C00503C	Touch probe - Only positive edge is supported	Fault	-
738218045	0x2C00503D	Touch probe - Invalid edge selection	Fault	-
738218046	0x2C00503E	Touch probe - Channel in use	Fault	-
738218047	0x2C00503F	Touch probe - PDO mapping fault	Fault	-
738218048	0x2C005040	Touch probe - Internal channel in use	Fault	-
738218049	0x2C005041	Touch probe - Time-out	Fault	-
738218050	0x2C005042	Touch probe - Communication error	Fault	-
738218051	0x2C005043	Touch probe - Invalid signal selection	Fault	-
738218052	0x2C005044	Touch probe - Wrong axis type	Fault	-

Event ID		Event	Severity	Configurable in
738218054	0x2C005046	Touch probe - Rising edge blocked	Fault	-
738218055	0x2C005047	Touch probe - Falling edge blocked	Fault	-
738218056	0x2C005048	Touch probe - Internal error	Fault	-
738218104	0x2C005078	Set values greater than the parameterized maximum values	Fault	-
738218105	0x2C005079	Set values inconsistent	Fault	-
738218106	0x2C00507A	Position difference per task cycle greater than half the cycle length	Fault	-
738218107	0x2C00507B	Invalid task cycle time	Fault	-
738218154	0x2C0050AA	Initialization - SDO write access failed	Fault	-
738218155	0x2C0050AB	Initialization - SDO read access failed	Fault	-
738218156	0x2C0050AC	Initialization - Cycle time of the fastest task too high	Fault	-
738218157	0x2C0050AD	Initialization - Motor rated torque = 0	Fault	-
738218158	0x2C0050AE	Initialization - Motor rated speed = 0	Fault	-
738218159	0x2C0050AF	Initialization - Reading of firmware version failed	Fault	-
738218160	0x2C0050B0	Initialization - Invalid Encoder resolution	Fault	-
738218161	0x2C0050B1	Initialization - Reading of encoder revolutions failed	Fault	-
738218162	0x2C0050B2	Initialization - Reading of encoder CRC failed	Fault	-
738218163	0x2C0050B3	Initialization - Absolute encoder position not available	Fault	-
738218164	0x2C0050B4	Controller firmware incompatible	Fault	-
738218165	0x2C0050B5	Invalid mode	Fault	-
738218166	0x2C0050B6	Initialization error at the encoder backplane bus	Fault	-
738218167	0x2C0050B7	Function 'Optical device identification' not supported	Fault	-
738218168	0x2C0050B8	Invalid gear factor	Fault	-
738218169	0x2C0050B9	Position outside cycle length	Fault	-
738218170	0x2C0050BA	Invalid cycle length (AddOffsetCyclic)	Fault	-
738218171	0x2C0050BB	Invalid input position (AddOffsetCyclic)	Fault	-
738218172	0x2C0050BC	Invalid cycle length (ZeroDetect)	Fault	-
738218173	0x2C0050BD	Invalid input position (ZeroDetect)	Fault	-
738218174	0x2C0050BE	Invalid start position (IntegrateAxis)	Fault	-
738218175	0x2C0050BF	Simultaneous direction setting for 'JogPos' and 'JogNeg'	Fault	-
738218176	0x2C0050C0	Value outside value range	Fault	-
738218177	0x2C0050C1	State not 'Disabled'	Fault	-
738218178	0x2C0050C2	Brake test - Invalid input value	Fault	-
738218179	0x2C0050C3	Brake test - Already active	Fault	-
738218180	0x2C0050C4	Brake grind in - Invalid input value	Fault	-
738218181	0x2C0050C5	Brake grind in - Already active	Fault	-
738218182	0x2C0050C6	Selected control mode not allowed	Fault	-
738218183	0x2C0050C7	Virtual axes not supported	Fault	-
738218184	0x2C0050C8	Axis not disabled	Fault	-
738218185	0x2C0050C9	Invalid feed constant	Fault	-
738218186	0x2C0050CA	Invalid traversing range	Fault	-
738218187	0x2C0050CB	Invalid cycle length	Fault	-
738218188	0x2C0050CC	Invalid position resolution	Fault	-
738218189	0x2C0050CD	Torque limit too large	Fault	-
738218190	0x2C0050CE	Torque limit < 0	Fault	-
738218191	0x2C0050CF	Invalid encoder signal	Fault	-
738218192	0x2C0050D0	Encoder signal greater than parameterized measuring range	Fault	-
738218193	0x2C0050D1	Invalid parameterized measuring range	Fault	-
738218194	0x2C0050D2	STO active in drive	Fault	-
738218195	0x2C0050D3	Inverter disable active	Fault	-
738218196	0x2C0050D4	Invalid SW limits	Fault	-
738218197	0x2C0050D5	Invalid jerk	Fault	-
738218198	0x2C0050D6	Parameter 'vl Target Velocity' not included in mapping	Fault	-
738218199	0x2C0050D7	Parameter 'vl Actual Velocity' not included in mapping	Fault	-
738218200	0x2C0050D8	Axis not homed	Fault	-
738218201	0x2C0050D9	Axis not in SimpleMode	Fault	-

Event ID		Event	Severity	Configurable in
738218202	0x2C0050DA	Axis in SimpleMode	Fault	-
738218203	0x2C0050DB	Function not supported by axis	Fault	-
738218204	0x2C0050DC	Execution index already in use	Fault	-
738218205	0x2C0050DD	SS1 active	Fault	-
738218206	0x2C0050DE	SS2 active	Fault	-
738218207	0x2C0050DF	Velocity limited by SLS1	Fault	-
738218208	0x2C0050E0	Velocity limited by SLS2	Fault	-
738218209	0x2C0050E1	Velocity limited by SLS3	Fault	-
738218210	0x2C0050E2	Velocity limited by SLS4	Fault	-
738218211	0x2C0050E3	Invalid execution index	Fault	-
738218253	0x2C00510D	The total number of manageable axes in the project has been reached	Fault	-
738218306	0x2C005142	Actual position of the load encoder not included in the mapping	Fault	-
738218307	0x2C005143	Function not supported by drive	Fault	-
738218308	0x2C005144	Autotuning with variable switching frequency	Fault	-
738218309	0x2C005145	A test mode is already active in the drive	Fault	-
738218310	0x2C005146	Function "Set position" is not allowed because home position is set permanently	Fault	-
738218894	0x2C00538E	Blending of cartesian motion with MoveDirect is not supported	Fault	-
738218895	0x2C00538F	Blending of L_MC4P_GroupWaitTime is not supported	Fault	-
738218896	0x2C005390	Auxilliary axes with mode DiscreteAbs/DiscreteRel cannot be blended	Fault	-
738218897	0x2C005391	Blending not possible without predecessor motion	Fault	-
738218898	0x2C005392	Blending not possible due to delayed request	Fault	-
738218899	0x2C005393	LookAhead = 0, blending not possible	Fault	-
738218900	0x2C005394	Abort of 'PathRefFromFile' during the execution of 'MovePath'	Fault	-
738219504	0x2C0055F0	Phasing not allowed	Fault	-
738219514	0x2C0055FA	Invalid CamRef	Fault	-
738219515	0x2C0055FB	Invalid cam type	Fault	-
738219516	0x2C0055FC	Invalid cam data	Fault	-
738219517	0x2C0055FD	Invalid number of memory segments	Fault	-
738219518	0x2C0055FE	Insufficient memory segments defined for cam	Fault	-
738219519	0x2C0055FF	Invalid law of motion	Fault	-
738219520	0x2C005600	Invalid input data	Fault	-
738219529	0x2C005609	Master out of cam	Fault	-
738219530	0x2C00560A	OffsetScaling - Invalid velocity/acceleration	Fault	-
738219531	0x2C00560B	Invalid cam table	Fault	-
738219532	0x2C00560C	Invalid start or end position of cam	Fault	-
738219533	0x2C00560D	Invalid scaling factor	Fault	-
738219534	0x2C00560E	Clutch in error	Fault	-
738219539	0x2C005613	Not allowed movement by master	Fault	-
738219540	0x2C005614	Clutch needs reversing	Fault	-
738219541	0x2C005615	Invalid default jerk	Fault	-
738219542	0x2C005616	Invalid open instant deceleration	Fault	-
738219543	0x2C005617	Invalid reversing	Fault	-
738219554	0x2C005622	File not found	Fault	-
738219555	0x2C005623	Invalid file	Fault	-
738219556	0x2C005624	Invalid checksum	Fault	-
738219557	0x2C005625	Invalid data size	Fault	-
738219564	0x2C00562C	Invalid TappetRef	Fault	-
738219565	0x2C00562D	Invalid tappet data	Fault	-
738219566	0x2C00562E	Invalid tappet type	Fault	-
738219567	0x2C00562F	Invalid tappet switching time	Fault	-
738219568	0x2C005630	Invalid tappet position	Fault	-
738219569	0x2C005631	Dynamic tappet sampling error	Fault	-

Event ID		Event	Severity	Configurable in
738219586	0x2C005642	LinearCoupling - Invalid X cycle length	Fault	-
738219587	0x2C005643	LinearCoupling - Invalid Y cycle length	Fault	-
738219588	0x2C005644	LinearCoupling - Invalid input position	Fault	-
738219589	0x2C005645	Invalid number of tappets	Fault	-
805306384	0x30000010	Internal error	Warning	-
805306385	0x30000011	Internal error	Warning	-
805306386	0x30000012	Internal error	Warning	-
805306387	0x30000013	Internal error	Warning	-
805306570	0x300000CA	Internal error	Warning	-
805306571	0x300000CB	Internal error	Warning	-
805311368	0x30001388	Internal error	Warning	-
805311369	0x30001389	CTRL - Feature not supported	Warning	-
805311370	0x3000138A	CTRL - Invalid index	Warning	-
805311371	0x3000138B	ISW - Invalid offset	Warning	-
805311373	0x3000138D	CTRL - Invalid size	Warning	-
805311374	0x3000138E	ISW - Invalid data	Warning	-
805311375	0x3000138F	ISW - Not ready	Warning	-
805311376	0x30001390	CTRL - Busy	Warning	-
805311377	0x30001391	ISW - Cannot queue acyclic EtherCAT command	Warning	-
805311378	0x30001392	CFG - No memory left	Warning	-
805311379	0x30001393	CTRL - Invalid parameter	Warning	-
805311380	0x30001394	CTRL - Not found	Warning	-
805311382	0x30001396	ISW - Invalid state	Warning	-
805311383	0x30001397	ISW - Cannot add slave to timer list	Warning	-
805311384	0x30001398	SLV - Time-out	Warning	-
805311385	0x30001399	ISW - Open failed	Warning	-
805311386	0x3000139A	LLA - Send failed	Warning	-
805311387	0x3000139B	CFG - Error when queuing a mailbox command	Warning	-
805311388	0x3000139C	ISW - Invalid mailbox command	Warning	-
805311389	0x3000139D	ISW - Unknown mailbox protocol command	Warning	-
805311390	0x3000139E	ISW - Access denied	Warning	-
805311394	0x300013A2	CFG - Invalid product key	Warning	-
805311395	0x300013A3	PRJ - Wrong format of master XML file	Warning	-
805311396	0x300013A4	CTRL - Function disabled	Warning	-
805311398	0x300013A6	PRJ - Mismatch of bus configuration and number of connected slaves	Warning	-
805311399	0x300013A7	PRJ - Error reading master XML file	Warning	-
805311401	0x300013A9	PRJ - Configurator error - cyclic commands are missing in master XML file	Warning	-
805311402	0x300013AA	PRJ - AL_STATUS register read command is missing in master XML file	Warning	-
805311403	0x300013AB	ISW - Fatal internal McSm error	Warning	-
805311404	0x300013AC	SLV - Slave error	Warning	-
805311405	0x300013AD	SLV - Frame lost, IDX mismatch	Warning	-
805311406	0x300013AE	SLV - At least one EtherCAT command is missing in the received frame	Warning	-
805311408	0x300013B0	CTRL - IOCTL EC_IOCTL_DC_LATCH_REQ_LTIMVALS not possible in DC Latching auto read mode	Warning	-
805311409	0x300013B1	SLV - Auto increment address - increment mismatch (slave missing)	Warning	-
805311410	0x300013B2	CTRL - Slave in invalid state, e.g. not in OP (API not callable in this state)	Warning	-
805311411	0x300013B3	SLV - Fixed station address lost or slave missing - FPRD to AL_STATUS failed	Warning	-
805311412	0x300013B4	PRJ - Too many cyclic commands in XML configuration file	Warning	-
805311414	0x300013B6	RAP - Master core not accessible	Warning	-
805311415	0x300013B7	SLV - COE mailbox send - WKC error	Warning	-

Event ID		Event	Severity	Configurable in
805311416	0x300013B8	SLV - COE mailbox receive - WKC error	Warning	-
805311417	0x300013B9	CTRL - No mailbox support	Warning	-
805311418	0x300013BA	CoE - Protocol not supported	Warning	-
805311419	0x300013BB	PRJ - EoE protocol not supported	Warning	-
805311420	0x300013BC	FoE . Protocol not supported	Warning	-
805311421	0x300013BD	PRJ - SoE protocol not supported	Warning	-
805311422	0x300013BE	PRJ - VoE protocol not supported	Warning	-
805311423	0x300013BF	PRJ - Configuration violates evaluation limits	Warning	-
805311424	0x300013C0	CFG - Evaluation time expired	Warning	-
805311431	0x300013C7	COE - invalid slave state	Warning	-
805311432	0x300013C8	CoE - SDO Abort 'Toggle bit not alternated (0x05030000)'	Warning	-
805311433	0x300013C9	CoE - SDO Abort 'SDO protocol time-out (0x05040000)'	Warning	-
805311434	0x300013CA	CoE - SDO Abort 'Client/server command specifier not valid or unknown (0x05040001)'	Warning	-
805311435	0x300013CB	CoE - SDO Abort 'Invalid block size (block mode only) (0x05040002)'	Warning	-
805311436	0x300013CC	CoE - SDO Abort 'Invalid sequence number (block mode only) (0x05040003)'	Warning	-
805311437	0x300013CD	CoE - SDO Abort 'CRC error (block mode only) (0x05040004)'	Warning	-
805311438	0x300013CE	CoE - SDO Abort 'Out of memory (0x05040005)'	Warning	-
805311439	0x300013CF	CoE - SDO Abort 'Unsupported access to an object (0x06010000)'	Warning	-
805311440	0x300013D0	CoE - SDO Abort 'Attempt to read a write only object (0x06010001)'	Warning	-
805311441	0x300013D1	CoE - SDO Abort 'Attempt to write a read only object (0x06010002)'	Warning	-
805311442	0x300013D2	CoE - SDO-Abort 'Object does not exist in the object dictionary (0x06020000)'	Warning	-
805311443	0x300013D3	CoE - SDO Abort 'Object cannot be mapped to the PDO (0x06040041)'	Warning	-
805311444	0x300013D4	CoE - SDO Abort 'Number and length of objects to be mapped exceed PDO length (0x06040042)'	Warning	-
805311445	0x300013D5	CoE - SDO Abort 'General parameter incompatibility (0x06040043)'	Warning	-
805311446	0x300013D6	CoE - SDO Abort 'General internal incompatibility in the device (0x06040047)'	Warning	-
805311447	0x300013D7	CoE - SDO Abort 'Access failed due to an hardware error (0x06060000)'	Warning	-
805311448	0x300013D8	CoE - SDO Abort 'Data type or length of service parameters do not match (0x06070010)'	Warning	-
805311449	0x300013D9	CoE - SDO Abort 'Data type does not match, service parameter too high (0x06070012)'	Warning	-
805311450	0x300013DA	CoE - SDO Abort 'Data type does not match, service parameter too low (0x06070013)'	Warning	-
805311451	0x300013DB	CoE - SDO Abort 'Subindex does not exist (0x06090011)'	Warning	-
805311452	0x300013DC	CoE - SDO Abort 'Write access - Parameter value exceeds limits (0x06090030)'	Warning	-
805311453	0x300013DD	CoE - SDO Abort 'Write access - Parameter value too high (0x06090031)'	Warning	-
805311454	0x300013DE	CoE - SDO Abort 'Write access - Parameter value too low (0x06090032)'	Warning	-
805311455	0x300013DF	CoE - SDO Abort 'Maximum value less than minimum value (0x06090036)'	Warning	-
805311456	0x300013E0	CoE - SDO Abort 'General error (0x08000000)'	Warning	-
805311457	0x300013E1	CoE - SDO Abort 'Data cannot be transferred/stored in application (0x08000020)'	Warning	-
805311458	0x300013E2	CoE - SDO Abort 'Local control - Data cannot be transferred/stored in application (0x08000021)'	Warning	-
805311459	0x300013E3	CoE- SDO Abort 'Actual device state - Data cannot be transferred/ stored in application (0x08000022)'	Warning	-
805311460	0x300013E4	CoE - SDO Abort 'Object dictionary - Dynamic generation fails or object dictionary is missing (0x08000023)'	Warning	-
805311461	0x300013E5	CoE - SDO Abort 'Unknown abort code'	Warning	-

Event ID		Event	Severity	Configurable in
805311462	0x300013E6	CoE - Invalid parameter	Warning	-
805311463	0x300013E7	CoE - CoE protocol not supported	Warning	-
805311464	0x300013E8	CoE - Unknown FoE error	Warning	-
805311465	0x300013E9	CoE - FoE error 'Not found'	Warning	-
805311466	0x300013EA	CoE - FoE error 'Access denied'	Warning	-
805311467	0x300013EB	CoE - FoE error 'Disk full'	Warning	-
805311468	0x300013EC	CoE - FoE error 'Illegal'	Warning	-
805311469	0x300013ED	CoE - FoE error 'Wrong packet number'	Warning	-
805311470	0x300013EE	CoE - FoE error 'Already existing'	Warning	-
805311471	0x300013EF	CoE - FoE error 'User missing'	Warning	-
805311472	0x300013F0	CoE - FoE error 'Only possible in bootstrap'	Warning	-
805311473	0x300013F1	CoE - FoE error 'No bootstrap'	Warning	-
805311474	0x300013F2	CoE - FoE error 'No access rights'	Warning	-
805311475	0x300013F3	CoE - FoE error 'Program error'	Warning	-
805311476	0x300013F4	CoE - FoE error 'Invalid parameter'	Warning	-
805311480	0x300013F8	CTRL - Master configuration not found	Warning	-
805311481	0x300013F9	SLV - Command error while EEPROM upload	Warning	-
805311482	0x300013FA	SLV - Command error while EEPROM download	Warning	-
805311483	0x300013FB	PRJ - Cyclic command too long	Warning	-
805311484	0x300013FC	PRJ - Invalid input offset in cyc cmd, please check InputOffs	Warning	-
805311485	0x300013FD	PRJ - Invalid output offset in cyc cmd, please check OutputOffs	Warning	-
805311753	0x30001509	RAP - Invalid cookie	Warning	-
805311754	0x3000150A	RAP - Watchdog expired	Warning	-
805311755	0x3000150B	RAP - Connecting 2nd server denied, multi server support is disabled	Warning	-
805311756	0x3000150C	RAP - Logon aborted	Warning	-
805311757	0x3000150D	RAP - Invalid version	Warning	-
805311769	0x30001519	RAP - Server stopped	Warning	-
805311770	0x3000151A	RAP - Watchdog expired	Warning	-
805311771	0x3000151B	RAP - Reconnect time expired	Warning	-
805311772	0x3000151C	RAP - Client logged on	Warning	-
805311773	0x3000151D	RAP - Client reconnected	Warning	-
805311774	0x3000151E	RAP - Socket changed after reconnect	Warning	-
805311817	0x30001549	DCM - Init function not called or call not successful	Warning	-
805311818	0x3000154A	DCM - Controller error - synchronization out of limit	Warning	-
805311819	0x3000154B	DCM - Not enough memory	Warning	-
805311820	0x3000154C	DCM - Hardware layer - (BSP) invalid	Warning	-
805311821	0x3000154D	DCM - Hardware layer - Error while modifying the timer	Warning	-
805311822	0x3000154E	DCM - Hardware layer - Timer is not running	Warning	-
805311823	0x3000154F	DCM - Hardware layer - Function is called on wrong CPU	Warning	-
805311881	0x30001589	EtherCAT - State change of master successful	Warning	-
805311882	0x3000158A	EtherCAT - Bus scan successful	Warning	-
805311883	0x3000158B	EtherCAT - Bus scan error	Warning	-
805311884	0x3000158C	EtherCAT - Distributed clocks state	Warning	-
805311885	0x3000158D	EtherCAT - Distributed clocks - Latching state	Warning	-
805311886	0x3000158E	CoE - SDO download failure	Warning	-
805311887	0x3000158F	CoE - SDO upload failure	Warning	-
805311888	0x30001590	CoE - OD-list upload failure	Warning	-
805311889	0x30001591	CoE - Object description upload failure	Warning	-
805311890	0x30001592	CoE - Object entry description upload failure	Warning	-
805311891	0x30001593	CoE - Emergency transfer failure	Warning	-
805311892	0x30001594	CoE - Emergency request	Warning	-
805311893	0x30001595	Cyclic command WKC error	Warning	-
805311894	0x30001596	Master init command WKC error	Warning	-
805311895	0x30001597	Slave init command WKC error	Warning	-

Event ID		Event	Severity	Configurable in
805311896	0x30001598	EoE receive WKC error	Warning	-
805311897	0x30001599	CoE receive WKC error	Warning	-
805311898	0x3000159A	FoE receive WKC error	Warning	-
805311899	0x3000159B	SoE receive - WKC error	Warning	-
805311900	0x3000159C	EoE send WKC error	Warning	-
805311901	0x3000159D	CoE send WKC error	Warning	-
805311902	0x3000159E	FoE send WKC error	Warning	-
805311903	0x3000159F	SoE send - WKC error	Warning	-
805311904	0x300015A0	Retry sending a frame	Warning	-
805311905	0x300015A1	Response on Ethernet frame	Warning	-
805311906	0x300015A2	Additional error information	Warning	-
805311907	0x300015A3	EtherCAT command - IDX actual value	Warning	-
805311908	0x300015A4	EtherCAT command - IDX set value	Warning	-
805311909	0x300015A5	Init command response error - No response	Warning	-
805311910	0x300015A6	Init command response error - Validation error	Warning	-
805311911	0x300015A7	Init command response error - Failed	Warning	-
805311912	0x300015A8	Master init command response error - No response	Warning	-
805311913	0x300015A9	Master init command response error - Validation error	Warning	-
805311914	0x300015AA	Missing EtherCAT command in Ethernet frame	Warning	-
805311915	0x300015AB	Mailbox init command timeout	Warning	-
805311916	0x300015AC	At least one EtherCAT slave not in 'Operational'	Warning	-
805311917	0x300015AD	EtherCAT cable connected	Warning	-
805311918	0x300015AE	EtherCAT cable not connected	Warning	-
805311919	0x300015AF	Cyclic commands - Time-out	Warning	-
805311920	0x300015B0	Redundant operation - Ethernet cable is missing at 2nd EtherCAT interface	Warning	-
805311921	0x300015B1	At least one slave is in state 'Error'	Warning	-
805311922	0x300015B2	Slave error	Warning	-
805311923	0x300015B3	Communication to device interrupted	Warning	-
805311924	0x300015B4	SDO abort	Warning	-
805311925	0x300015B5	DC slaves are 'in-sync'	Warning	-
805311926	0x300015B6	DC slaves are 'out-of-sync'	Warning	-
805311927	0x300015B7	DC single latch on slave	Warning	-
805311928	0x300015B8	MbxTferRcv - file upload failure	Warning	-
805311929	0x300015B9	MbxTferRcv - file download failure	Warning	-
805311930	0x300015BA	Client registration lost	Warning	-
805311931	0x300015BB	Redundant operation - Ethernet cable connected	Warning	-
805311932	0x300015BC	SoE write error init command mbox	Warning	-
805311960	0x300015D8	Hot Connect - all groups detected	Warning	-
805311961	0x300015D9	Hot Connect - all group errors detected	Warning	-
805311962	0x300015DA	Slave removed from bus	Warning	-
805311963	0x300015DB	Slave added to bus	Warning	-
805311964	0x300015DC	Topology was changed	Warning	-
805311965	0x300015DD	Port closed	Warning	-
805311966	0x300015DE	MbxTferRcv - Write IDN failure	Warning	-
805311967	0x300015DF	MbxTferRcv - Read IDN failure	Warning	-
805311968	0x300015E0	SoE - Emergency transfer failure	Warning	-
805311969	0x300015E1	SoE - Emergency request	Warning	-
805311970	0x300015E2	SoE - Notification transfer failure	Warning	-
805311971	0x300015E3	SoE - Notification request	Warning	-
805311972	0x300015E4	FoE abort	Warning	-
805312069	0x30001645	Bus scan state	Warning	-
805312071	0x30001647	Latch/Edge - No edge	Warning	-
805312072	0x30001648	Remote API diagnosis port - Connection established	Warning	-
805312073	0x30001649	Remote API diagnosis port - Connection disconnected	Warning	-

Event ID		Event	Severity	Configurable in
805312074	0x3000164A	Client registered from cookie	Warning	-
805312075	0x3000164B	Client unregistered from cookie	Warning	-
805312076	0x3000164C	Unknown notification	Warning	-
805312077	0x3000164D	Slave latched	Warning	-
805312078	0x3000164E	Bus scan - Error	Warning	-
805312079	0x3000164F	Invalid number of slaves	Warning	-
805312080	0x30001650	Cannot get SlaveInfo	Warning	-
805312081	0x30001651	Deviation of slave	Warning	-
805312082	0x30001652	Slave is not configured	Warning	-
805312083	0x30001653	SlaveInfo	Warning	-
805312084	0x30001654	SLV - Error retrieving configuration data	Warning	-
805312085	0x30001655	Bus scan - Deviation	Warning	-
805312086	0x30001656	Communication to device interrupted	Warning	-
805312087	0x30001657	Slave is not in expected status	Warning	-
805312090	0x3000165A	Wrong response on 'configured fix address request' for slave	Warning	-
805312091	0x3000165B	Wrong response on 'alias address' request for slave	Warning	-
805312092	0x3000165C	Cannot execute EC_IOCTL_DC_SLV_SYNC_DEVLIMIT_GET	Warning	-
805312093	0x3000165D	Cannot read latch timer	Warning	-
805312094	0x3000165E	Cannot execute EC_IOCTL_DC_SLV_SYNC_RESTART	Warning	-
805312097	0x30001661	RAP - Invalid parameter size	Warning	-
805312098	0x30001662	RAP - Marshaling error	Warning	-
805312099	0x30001663	Unable to enqueue (missing calls to ProcessNotificationJobs)	Warning	-
805312100	0x30001664	No connection to slaves	Warning	-
805312101	0x30001665	ecatSetTargetState cannot set EtherCAT master into target state, master is busy (time-out)	Warning	-
805312102	0x30001666	ecatStop() returns 'Busy', retry...	Warning	-
805312103	0x30001667	Mailbox transfer request - Error	Warning	-
805312104	0x30001668	Mailbox transfer	Warning	-
805312105	0x30001669	Waiting for mailbox transfer from master...	Warning	-
805312106	0x3000166A	Mailbox transfer - Fatal time-out error	Warning	-
805312107	0x3000166B	Bus cycle and Sync period are different	Warning	-
805312108	0x3000166C	Error getting the bus scan state	Warning	-
805312109	0x3000166D	Wrong response on DC supported request or slave	Warning	-
805312110	0x3000166E	Unable to set 'DC slave sync disable'	Warning	-
805312111	0x3000166F	Error when restarting bus scan	Warning	-
805312112	0x30001670	Bus scan timeout	Warning	-
805312568	0x30001838	Configuration error - Check of VendorID failed	Warning	-
805312569	0x30001839	Configuration error - Check of ProductCode failed	Warning	-
805312570	0x3000183A	Configuration error - Check of Revision failed	Warning	-
805312571	0x3000183B	Configuration error - Check of VendorID failed	Warning	-
805312572	0x3000183C	Configuration error - Odd device at bus end	Warning	-
805312578	0x30001842	Internal error counter resetted	Warning	-
805312580	0x30001844	All slaves 'Operational' again	Warning	-
805312581	0x30001845	Cyclic command WKC error	Warning	-
805312582	0x30001846	Frame response error	Warning	-
805312583	0x30001847	Not all slaves are 'Operational'	Warning	-
805312584	0x30001848	Emergency message - Overflow, further messages blocked	Warning	-
805312588	0x3000184C	New configuration loaded	Warning	-
805312589	0x3000184D	New configuration loaded, no slaves defined	Warning	-
805312590	0x3000184E	Master - Start failed, configuration error	Warning	-
805312591	0x3000184F	New configuration loaded from slaves EEPROM	Warning	-
805312598	0x30001856	Master - Start failed	Warning	-
805312599	0x30001857	Master - Start failed, bus configuration error	Warning	-
805312600	0x30001858	Master - Start failed, EtherCAT cable disconnected	Warning	-
805312601	0x30001859	Master - Start failed, DC/DCM configuration	Warning	-

Event ID		Event	Severity	Configurable in
805312602	0x3000185A	Master - Start failed, cannot set slaves to 'Pre-Operational'	Warning	-
805312608	0x30001860	Master - Set 'Operational' failed	Warning	-
805312609	0x30001861	Master - Set 'Operational' failed, Master not initialized	Warning	-
805312610	0x30001862	Master - Set 'Operational' failed, EtherCAT cable disconnected	Warning	-
805312611	0x30001863	Master - Set 'Operational' failed, DCM not in-sync	Warning	-
805312612	0x30001864	Master - Set 'Operational' failed, bus cycle and DC different	Warning	-
805312613	0x30001865	Master - Set 'Operational' takes some time...	Warning	-
805312614	0x30001866	Master - Set 'Operational' failed, time-out	Warning	-
805312615	0x30001867	Master - Set 'Operational' failed, slave error	Warning	-
805312616	0x30001868	Master - Set 'Operational' aborted by reset command	Warning	-
805312618	0x3000186A	Master - Stopping failed	Warning	-
805312619	0x3000186B	Master - Stopping failed, cannot set Slaves 'Pre-Operational'	Warning	-
805312628	0x30001874	Master - Shutdown failed	Warning	-
805312638	0x3000187E	Remote API Server - Start failed	Warning	-
805312648	0x30001888	Start Download Service	Warning	-
805312649	0x30001889	Download Service done	Warning	-
805312668	0x3000189C	MMC - Internal error	Warning	-
805312669	0x3000189D	MMC - 'Modular Machine Configuration' is active	Warning	-
805312670	0x3000189E	MMC - Service started	Warning	-
805312671	0x3000189F	MMC - Service stopped	Warning	-
805312672	0x300018A0	MMC - Error in configuration files	Warning	-
805312673	0x300018A1	MMC - File does not exist	Warning	-
805312674	0x300018A2	MMC - Parsing error	Warning	-
805312675	0x300018A3	MMC - parsing of file successful	Warning	-
805312676	0x300018A4	MMC - Devices not sorted in ascending order or devices missing	Warning	-
805312677	0x300018A5	MMC - Number of devices in device tree differs	Warning	-
805312678	0x300018A6	MMC - Device type mismatch for Alias Address	Warning	-
805312679	0x300018A7	MMC - Invalid Alias Address	Warning	-
805312680	0x300018A8	MMC - Duplicated Alias Address	Warning	-
805312681	0x300018A9	MMC - No configuration checks	Warning	-
805312682	0x300018AA	MMC - Invalid configuration	Warning	-
805312683	0x300018AB	MMC - Mandatory slave missing	Warning	-
805312684	0x300018AC	MMC - Optional slave is present, but not allowed	Warning	-
805312685	0x300018AD	MMC - No valid service active	Warning	-
805312686	0x300018AE	MMC - Address assignment error, less slaves connected than configured	Warning	-
805312687	0x300018AF	MMC - Address assignment error, more slaves connected than configured	Warning	-
805312688	0x300018B0	MMC - Address assignment error, invalid device	Warning	-
805312689	0x300018B1	MMC - Address assignment successful	Warning	-
805312690	0x300018B2	MMC - Address assignment failed	Warning	-
805312691	0x300018B3	MMC - Address assignment done	Warning	-
805312692	0x300018B4	MMC - Address assignment error, writing address by CoE	Warning	-
805312693	0x300018B5	MMC - Slave identification error	Warning	-
805312694	0x300018B6	MMC - Slave identification error, slave ident data failed	Warning	-
805312695	0x300018B7	MMC - Service state cannot be changed, set bus to 'INIT' first	Warning	-
805312867	0x30001963	Last ETC message	Warning	-
805405056	0x30018180	EtherCAT - DC synchronization required	Warning	-
805405057	0x30018181	EtherCAT - Communication error	Fault > CiA402	0x285B:001
805405312	0x30018280	EtherCAT - Wrong sync manager address	Fault	-
805405313	0x30018281	EtherCAT - Wrong sync manager size	Fault	-
805405314	0x30018282	EtherCAT - Wrong sync manager settings	Fault	-
805405315	0x30018283	PDO mapping: Unknown object	Fault	-
805405316	0x30018284	No PDO mapping object	Fault	-
805405317	0x30018285	Too many objects mapped	Fault	-

Event ID		Event	Severity	Configurable in
805405318	0x30018286	PDO mapping error	Fault	-
805405320	0x30018288	PDO mapping object is already used by PLC.	Fault	-
805406464	0x30018700	EtherCAT - Sync error	Fault	-
805406465	0x30018701	Sync PLL - Time-out	Fault	-
805437220	0x3001FF24	Invalid Sync0 cycle time	Fault	-
805437270	0x3001FF56	Check OUT-port of EtherCAT master		-
805437271	0x3001FF57	Check IN-port of EtherCAT slave		-
822313234	0x31038112	Network - Time-out explicit message		-
822313236	0x31038114	Network - Overall communication time-out	Warning	0x2859:007
822313346	0x31038182	CAN: bus off	Warning	0x2857:010
822313347	0x31038183	CAN: warning	Warning	0x2857:011
822313348	0x31038184	CAN: heartbeat time-out consumer 1	Warning	0x2857:005
822313349	0x31038185	CAN: heartbeat time-out consumer 2	Warning	0x2857:006
822313350	0x31038186	CAN: heartbeat time-out consumer 3	Warning	0x2857:007
822313351	0x31038187	CAN: heartbeat time-out consumer 4	Warning	0x2857:008
822313360	0x31038190	Network - Watchdog time-out	Warning	0x2859:001
822313361	0x31038191	Network - Disruption of cyclic data exchange	No response	0x2859:002
822313362	0x31038192	Network - Initialization error	Warning	0x2859:004
822313363	0x31038193	Network - Invalid cyclic process data	Warning	0x2859:005
822313370	0x3103819A	Network - Initialization with safety option failed	Information	-
822313371	0x3103819B	Network - Communication time-out with safety option	Information	-
822313607	0x31038287	Network - Invalid configuration	Warning	0x2859:003
822313617	0x31038291	CAN: RPDO1 time-out	Warning	0x2857:001
822313618	0x31038292	CAN: RPDO2 time-out	Warning	0x2857:002
822313620	0x31038294	CAN: RPDO4 time-out	Warning	0x2857:004

19.5.2 Causes and remedies

0 | 0x00000000 **No error**

Cause	Remedy	Severity/response
No error	For information only. No remedy necessary.	Information

537469728 | 0x20092320 **Short circuit or earth leakage at the motor end**

Cause	Remedy	Severity/response
• Short circuit/earth fault of motor cable • Capacitive charging current of the motor cable too high.	• Check motor cable. • Check length of the motor cable. • Use shorter or lower-capacitance motor cable.	Fault • The event can only be reset after a blocking time. Blocking time: 5 s

537469760 | 0x20092340 **Short circuit at the motor end**

Cause	Remedy	Severity/response
Short circuit of motor cable	Check motor cable for short circuit.	Fault • The event can only be reset after a blocking time. Blocking time: 5 s

537469777 | 0x20092351 **Motor utilization too high (i^2xt)**

Cause	Remedy	Severity/response
Motor thermally overloaded, e.g. by an impermissible continuous current or by frequent or too long acceleration processes.	Check drive sizing. Check the setting in the warning threshold or error threshold.	Fehler > CiA402 (configurable) Setting parameters: 0x2D50:001

537469824 | 0x20092380 **Trouble - utilization of the power section (ixt) too high**

Cause	Remedy	Severity/response
Power section overloaded.	Check drive sizing.	Fault

537469825 | 0x20092381 **Warning - Utilization of the power section (ixt) too high**

Cause	Remedy	Severity/response
Power section overloaded.	Check drive sizing.	Warning

537469826 | 0x20092382 **Fault - Device utilization (ixt) too high**

Cause	Remedy	Severity/response
Device utilisation (ixt) too high by frequent and too long acceleration processes.	Check drive sizing. • Reduce the maximum current of the inverter 0x6073. • In case of high mass inertias, reduce maximum current of the inverter 0x6073 to 150 %.	Fault • The inverter is disabled immediately. The motor has no torque (is coasting). • The event can only be reset after a blocking time. Blocking time: 3 s

Related topics
- Device overload monitoring (ixt) 📖 457

537469827 | 0x20092383 **Warning - Device utilization (ixt) too high**

Cause	Remedy	Severity/response
Device utilisation (ixt) too high by frequent and too long acceleration processes.	Check drive dimensioning.	Warning

Related topics
- Device overload monitoring (ixt) 457

537469828 | 0x20092384 **Ultimate motor current reached**

Cause	Remedy	Severity/response
Ultimate motor current reached.	• Reduce the maximum current of the inverter. 0x6073 • Optimize the current controller. 0x2942	Fault > CiA402 (configurable) Setting parameters: 0x2D46:002

537469829 | 0x20092385 **Parameterized max. motor current > max. device current**

Cause	Remedy	Severity/response
Parameterized max. motor current 0x6073 > max. device current 0x2DDF:002	Reduce max. motor current. 0x6073	Warning

537469830 | 0x20092386 **Clamp is active**

Cause	Remedy	Severity/response
Max. device current has been reached. (Display in 0x2DDF:002)	• Select a flatter speed ramp. • Reduce the load. • Set Imax controller more dynamically. 0x2B08	Warning

537469831 | 0x20092387 **Clamp responded too often**

Cause	Remedy	Severity/response
Maximum current of the axis (display in 0x2DDF:002) has been reached too often in succession.	• Select a flatter speed ramp. • Reduce the load. • Set Imax controller more dynamically.	Fault

Related topics
- Imax controller 262

537469833 | 0x20092389 **Warning - device utilization (ixt) too high**

Cause	Remedy	Severity/response
Frequent and too long acceleration processes with overcurrent.	Check drive sizing.	Warning

537469835 | 0x2009238B **Trouble - Device utilization (ixt) too high**

Cause	Remedy	Severity/response
Frequent and too long acceleration processes with overcurrent.	Check drive sizing.	Fault

537473409 | 0x20093181 **Mains failure**

Cause	Remedy	Severity/response
The motor was decelerated to standstill via the mains failure control without an undervoltage fault occurring.	• Check mains voltage. • Check mains settings. • Check fuses.	Fault

Related topics
- Mains voltage 41

537473552 | 0x20093210 **Fault - DC bus overvoltage**

Cause	Remedy	Severity/response
DC-bus voltage has exceeded the error threshold for overvoltage due to a too high braking energy or a too high mains voltage. The error threshold (display in 0x2540:006) results from the setting of the rated mains voltage in 0x2540:001.	• Reduce dynamic performance of the load profile. • Check mains voltage. • Check settings for brake energy management. • 0x2541:001 = [0]: Connect brake resistor to the power unit and activate the integrated brake chopper.	Fault

Related topics
- Mains voltage 41
- Brake energy management 459

537473568 | 0x20093220 **Fault - DC bus undervoltage**

Cause	Remedy	Severity/response
DC-bus voltage has fallen below the error threshold for undervoltage. The error threshold (display in 0x2540:003) results from the setting of the rated mains voltage in 0x2540:001.	• Check mains voltage. • Check DC-bus voltage. • Check mains settings. • Check fuses.	Trouble • The event can only be reset after a blocking time. Blocking time: 5 s

Related topics
- Mains voltage 41

537477648 | 0x20094210 **Fault - Power unit overtemperature**

Cause	Remedy	Severity/response
The heatsink temperature of the power unit (display in 0x2D84:001, 004, 006) has exceeded the fixed error threshold (100 °C). • Ambient temperature too high. • Fan or ventilation slots are polluted. • Fan is defective.	• Check mains voltage. • Provide for a sufficient cooling of the device. In case of a 100 % load, 60 C to +70°C are normal. Display of the heatsink temperature in 0x2D84:001, 004, 006. • Clean fan and ventilation slots. If required, replace fan. • Reduce switching frequency 0x2939	Fault

537477760 | 0x20094280 **Fault - Heat sink temperature sensor**

Cause	Remedy	Severity/response
Sensor for the temperature monitoring of the power unit is defective. The failure of the temperature monitoring function poses the risk of overheating!	Hardware error: it is necessary to contact the manufacturer, since the device must be replaced.	Fault

537477761 | 0x20094281 **Heat sink fan warning**

Cause	Remedy	Severity/response
Warning of the heatsink fan.	Clean fan and ventilation slots. If required, replace fan. The fans can be unlocked via locking hooks and can then be removed.	Warning

537477762 | 0x20094282 **Thermal overload of control unit**

Cause	Remedy	Severity/response
• Control card temperature > 100 °C • Ambient temperature too high	• Provide for better cooling. • Reduce ambient temperature.	Information

537477904 | 0x20094310 **Motor overtemperature**

Cause	Remedy	Severity/response
The motor temperature sensor connected to terminals X109/T1 and X109/T2 measures a too high motor temperature. • Motor too hot by impermissibly high currents. • Motor too hot by frequent and too long acceleration processes.	• Check drive dimensioning. • Check motor temperature sensor and wiring.	Fault > CiA402 (configurable) • The event can only be reset after a blocking time. Blocking time: 5 s Setting parameters: 0x2D49:002

Related topics
▸ Motor temperature monitoring 🕮 286

537478016 | 0x20094380 **Fault - Motor temperature sensor**

Cause	Remedy	Severity/response
Motor PTC error.	Connect PTC or switch off monitoring.	Fault > CiA402 (configurable) Setting parameters: 0x2D49:002

537478017 | 0x20094381 **Error - Motor temperature monitoring (PTC)**

Cause	Remedy	Severity/response
Motor PTC error.	Connect PTC or switch off monitoring.	Fault > CiA402 (configurable) Setting parameters: 0x2D48:002

537478018 | 0x20094382 **Motor overtemperature (load encoder/master encoder)**

Cause	Remedy	Severity/response
Motor temperature via load encoder higher than variable temperature limit.	Connect PTC or switch off monitoring. Set a higher warning threshold (0x2D49:003) and/or error threshold (0x2D49:004).	Fault > CiA402 (configurable) Setting parameters: 0x2D49:002

537478019 | 0x20094383 **Motor temperature sensor error (load encoder/master encoder)**

Cause	Remedy	Severity/response
Motor PTC error.	Connect PTC or switch off monitoring.	Fault > CiA402 (configurable) Setting parameters: 0x2D49:002

537481490 | 0x20095112 **External supply voltage critical**

Cause	Remedy	Severity/response
External supply voltage failed or too low.	• Check external 24V voltage supply (terminal X5/24E). • Check mains voltage.	Warning

537485328 | 0x20096010 **Internal error**

Cause	Remedy	Severity/response
Internal error	Restart the device. If the error persists, contact the manufacturer.	Warning

537485706 | 0x2009618A **Warning - Internal fan**

Cause	Remedy	Severity/response
Warning of the internal fan.	Check/replace internal fan.	Warning

537486096 | 0x20096310 **Incorrect parameter set download**

Cause	Remedy	Severity/response
CRC error in the parameter set detected. Vendor, product code or OBD revision are different. The parameter set is unknown.	Recreate parameter set. Repeat parameter set download.	Warning

537486112 | 0x20096320 **Parameter error in object**

Cause	Remedy	Severity/response
Unknown index in the parameter set.	Recreate parameter set.	Warning

537489537 | 0x20097081 **Fault - Analog input 1**

Cause	Remedy	Severity/response
The monitoring function of the input signal configured for analog input 1 in and has been triggered.	• Check input signal at analog input 1. • Check configuration of the monitoring function.	No response (configurable) Setting parameters: 0x2636:010

Related topics
▸ Analog input 1 📖 300

537489697 | 0x20097121 **Fault - Pole position identification**

Cause	Remedy	Severity/response
• Too many deviations during the pole position identification. • Compared to the inverter, the rated motor current is too high or too low.	• Check setting of the motor data. • Ensure that the motor is at a standstill during the pole position identification process. • Ensure that the motor and inverter match each other in terms of power.	Fault

537490179 | 0x20097303 **Fault - Motor feedback**

Cause	Remedy	Severity/response
Defective encoder cable. Defective encoder.	Check encoder cable. Check encoder. Switch off monitoring if no encoder is used.	Fault > CiA402 (configurable) Setting parameters: 0x2C45

537490180 | 0x20097304 **Error - Load encoder/master encoder**

Cause	Remedy	Severity/response
Defective encoder cable. Defective encoder.	Check encoder cable. Check encoder. Switch off monitoring if no encoder is used.	Fault > CiA402 (configurable) Setting parameters: 0x2C55

537490304 | 0x20097380 **Motor encoder - Communication error**

Cause	Remedy	Severity/response
The communication to an encoder is disturbed.	Check the supply voltage of the encoder. (0x2C42:002) Check encoder cable.	Fault > CiA402 (configurable) Setting parameters: 0x2C41:004

537490305 | 0x20097381 **Motor encoder - wrong absolute value because motor speed is too high**

Cause	Remedy	Severity/response
The absolute encoder position cannot be accepted as the motor rotates too fast.	Let the motor coast.	Fault > CiA402 (configurable) Setting parameters: 0x2C41:004

537490306 | 0x20097382 **Load encoder/master encoder - Communication error**

Cause	Remedy	Severity/response
The communication to an encoder is disturbed.	Check the supply voltage of the encoder. (0x2C42:002) Check encoder cable.	Fault > CiA402 (configurable) Setting parameters: 0x2C51:004

537490307 | 0x20097383 **Load encoder/master encoder - wrong absolute value because motor speed is too high**

Cause	Remedy	Severity/response
The absolute encoder position cannot be accepted as the motor rotates too fast.	Let the motor coast.	Fault > CiA402 (configurable) Setting parameters: 0x2C51:004

537526016 | 0x2009FF00 **Fatal internal error**

Cause	Remedy	Severity/response
Internal error	Restart the device. If the error persists, contact the manufacturer.	Fault

537526017 | 0x2009FF01 **Fatal internal communication error**

Cause	Remedy	Severity/response
Internal error	Restart the device. If the error persists, contact the manufacturer.	Fault

537526018 | 0x2009FF02 **Fault - Motor holding brake**

Cause	Remedy	Severity/response
Brake fault due to short circuit or cable break.	Check brake. Check wiring.	Fault > CiA402 (configurable) Setting parameters: 0x2820:006

537526019 | 0x2009FF03 **Fatal internal error - task overflow**

Cause	Remedy	Severity/response
Internal error	Restart the device. If the error persists, contact the manufacturer.	Fault

537526020 | 0x2009FF04 **PPI - Motor movement too large**

Cause	Remedy	Severity/response
Motor moved too much during pole position identification.	Check controller settings in 0x2C62.	Fault > CiA402 (configurable) Setting parameters: 0x2C60

537526021 | 0x2009FF05 **Safe torque off (STO) activated**

Cause	Remedy	Severity/response
"Safe Torque Off (STO)" has been activated via Safety. The movement is interrupted although the controller is still enabled.	Enable "Safe Torque Off (STO)" again or disable controller. In the event of false tripping, check the wiring at terminal X1.	Warning

537526022 | 0x2009FF06 **Motor overspeed**

Cause	Remedy	Severity/response
The motor speed has reached the error threshold for overspeed set in 0x2D44:001.	Adapt the maximum motor speed 0x6080 and the warning threshold or error threshold 0x2D44:001.	Fault > CiA402 (configurable) • The event can only be reset after a blocking time. Blocking time: 1 s Setting parameters: 0x2D44:002

Related topics
▸ Motor speed monitoring 289

537526023 | 0x2009FF07 **Not permitted during identification or in test mode**

Cause	Remedy	Severity/response
An attempt was made to write a parameter that has an influence on a currently running identification or the currently activated test mode.	Do not change parameters until identification is complete or test mode is deactivated again.	Warning

537526024 | 0x2009FF08 **Not permitted during identification**

Cause	Remedy	Severity/response
An attempt was made to write a parameter that has an influence on a currently running identification.	Do not change parameters until identification is complete.	Warning

537526025 | 0x2009FF09 **Motor phase missing**

Cause	Remedy	Severity/response
A failure of several motor phases has been detected.	• Check wiring between inverter and motor. • In case of a false tripping, adapt the settings for the motor phase failure detection.	No response (configurable) • The event can only be reset after a blocking time. Blocking time: 2 s Setting parameters: 0x2D45:004 0x2D45:001

Related topics
▸ Motor phase failure detection 289

537526026 | 0x2009FF0A **Motor phase failure phase U**

Cause	Remedy	Severity/response

A failure of the motor phase U has been detected.	• Check wiring between inverter and motor.
	• In case of a false tripping, adapt the settings for the motor phase failure detection.
	  • 0x2D45:002 (Current threshold)
	  • 0x2D45:003 (Voltage threshold)
		No response (configurable)
		• The event can only be reset after a blocking time.
		Blocking time: 2 s
		Setting parameters:
		0x2D45:004
		0x2D45:001

Related topics
▸ Motor phase failure detection 289

537526027 | 0x2009FF0B **Motor phase failure phase V**

Cause	Remedy	Severity/response

A failure of the motor phase V has been detected.	• Check wiring between inverter and motor.
	• In case of a false tripping, adapt the settings for the motor phase failure detection.
	  • 0x2D45:002 (Current threshold)
	  • 0x2D45:003 (Voltage threshold)
		No response (configurable)
		• The event can only be reset after a blocking time.
		Blocking time: 2 s
		Setting parameters:
		0x2D45:004
		0x2D45:001

Related topics
▸ Motor phase failure detection 289

537526028 | 0x2009FF0C **Motor phase failure phase W**

Cause	Remedy	Severity/response

A failure of the motor phase W has been detected.	• Check wiring between inverter and motor.
	• In case of a false tripping, adapt the settings for the motor phase failure detection.
	  • 0x2D45:002 (Current threshold)
	  • 0x2D45:003 (Voltage threshold)
		No response (configurable)
		Setting parameters:
		0x2D45:004
		0x2D45:001

537526029 | 0x2009FF0D **No resolver connected - command cannot be executed**

Cause	Remedy	Severity/response
An attempt was made to identify a resolver fault. But the V/f control without feedback system is selected as the control mode.	The resolver error can only be identified if a resolver is used as a feedback system. (0x2C00 = 1 or 2)	Warning

537526030 | 0x2009FF0E **Speed too low - command cannot be executed**

Cause	Remedy	Severity/response
The current speed is too low to identify the resolver error.	Repeat identification at higher speed.	Warning

537526031 | 0x2009FF0F **No resolver as motor encoder connected - command cannot be executed**

Cause	Remedy	Severity/response
An attempt was made to identify a resolver fault. But there is an encoder available as a feedback system.	The resolver error can only be identified if a resolver is used as a feedback system.	Warning

537526032 | 0x2009FF10 **Time-out during resolver identification**

Cause	Remedy	Severity/response
The current speed is too low to identify the resolver error.	Repeat identification at higher speed.	Warning

537526033 | 0x2009FF11 **Numeric problem during resolver identification**

Cause	Remedy	Severity/response
The current speed is too low to identify the resolver error.	Repeat identification at higher speed.	Warning

537526034 | 0x2009FF12 **Inverter error too large**

Cause	Remedy	Severity/response
The results of the inverter error identification are not plausible.	Check shielding of the motor cable. Connect the shield with a surface as large as possible.	Warning

537526035 | 0x2009FF13 **Identification aborted**

Cause	Remedy	Severity/response
Pole position identification has been aborted. An error has occurred during identification or the controller has been disabled.	Repeat pole position identification.	Fault > CiA402 (configurable) Setting parameters: 0x2C60

537526036 | 0x2009FF14 **Not permitted in state 'operation enabled' or 'quick stop active'**

Cause	Remedy	Severity/response
Reading out and accepting the HIPERFACE® data is only permitted when the controller is inhibited.	Disable controller before reading out.	Warning

537526037 | 0x2009FF15 **No HIPERFACE® absolute value encoder as motor encoder connected - command cannot be executed**

Cause	Remedy	Severity/response
An attempt was made to read out HIPERFACE® data although no HIPERFACE® encoder is connected. No HIPERFACE® encoder is selected in 0x2C40.	Connect HIPERFACE® encoder. A HIPERFACE® encoder must be selected in 0x2C40.	Warning

537526038 | 0x2009FF16 **Connected HIPERFACE® motor encoder is not supported**

Cause	Remedy	Severity/response
The HIPERFACE® encoder has a type code that is neither stored in the firmware nor corresponds to the type code set under 0x2C41:002.	Enter correct type code under 0x2C41:002.	Fault > CiA402 (configurable) Setting parameters: 0x2C41:004

537526039 | 0x2009FF17 **Connected HIPERFACE® motor encoder is not supported - command cannot be executed**

Cause	Remedy	Severity/response
The HIPERFACE® encoder has a type code that is not stored in the firmware. Hence, no data can be detected.	Connect an encoder with a supported type code.	Warning

537526040 | 0x2009FF18 **Communication time-out in manual control mode**

Cause	Remedy	Severity/response
The writing of the target data has failed during operation for manual wiring control longer than the time-out time. (0x2836:005)	Increase timeout. (0x2836:005) Restart manual jog dialog.	Fault

537526041 | 0x2009FF19 **Motor parameter identification fault**

Cause	Remedy	Severity/response
During the automatic identification of the motor, an error has occurred.	• Set motor data so that they comply with the data on the motor nameplate. • Check wiring of the motor.	Fault

537526042 | 0x2009FF1A **Connected HIPERFACE® load encoder/master encoder is not supported**

Cause	Remedy	Severity/response
The HIPERFACE® encoder has a type code that is neither stored in the firmware nor corresponds to the type code set under 0x2C41:002.	Enter correct type code under 0x2C41:002.	Fault > CiA402 (configurable) Setting parameters: 0x2C51:004

537526043 | 0x2009FF1B **Connected HIPERFACE® load encoder/master encoder is not supported - command cannot be executed**

Cause	Remedy	Severity/response
The HIPERFACE® encoder has a type code that is not stored in the firmware. Hence, no data can be detected.	Connect an encoder with a supported type code.	Warning

537526044 | 0x2009FF1C **No resolver as load encoder/master encoder connected - command cannot be executed**

Cause	Remedy	Severity/response
An attempt was made to identify a resolver fault. But there is an encoder available as a feedback system.	The resolver error can only be identified if a resolver is used as a feedback system.	Warning

537526045 | 0x2009FF1D **No HIPERFACE® absolute value encoder as load encoder/master encoder connected - command cannot be executed**

Cause	Remedy	Severity/response
An attempt was made to read out HIPERFACE® data although no HIPERFACE® encoder is connected. No HIPERFACE® encoder is selected in 0x2C50.	Connect HIPERFACE® encoder. A HIPERFACE® encoder must be selected in 0x2C50.	Warning

537526046 | 0x2009FF1E **FIQ runtime error**

Cause	Remedy	Severity/response
The monitoring of the FIQ by the FPGA has triggered.	Connect an encoder with a supported type code.	Fault

537526048 | 0x2009FF20 **Brand protection - check failed**

Cause	Remedy	Severity/response
The review of brand protection has failed.	Enter correct pin. Replace device with OEM device and reprogram pin.	Warning

537526049 | 0x2009FF21 **Time-out holding brake feedforward control**

Cause	Remedy	Severity/response

The specified feedforward control torque could not be built up within one second.	• 0x2820:009 (Starting torque source) = [0] (Last torque saved):
	  • The load to be braked is too large.
	  • Control the stored torque. ▸ 0x2820:021
	• 0x2820:009 (Starting torque source) = [1] (Torque in 0x2820:010):
	  • The set torque is too high.
	  • Reduce torque.
		Fault

Related topics
▸ Holding brake control 240

537526050 | 0x2009FF22 **Velocity error**

Cause	Remedy	Severity/response
The speed error exceeds the limit from 0x2D51:001 for a time duration > 0x2D51:002.	Increase timeout in 0x2D51:002. Increase limit in 0x2D51:001. Increase gain of the speed controller. Increase torque limit and/or current limit.	Fault

537526051 | 0x2009FF23 **Position error**

Cause	Remedy	Severity/response
The following error exceeds the limit from 0x2D51:004 for a time duration > 0x2D51:005.	Increase timeout in 0x2D51:005. Increase limit in 0x2D51:004. Increase gain of the position controller.	Fault

537526054 | 0x2009FF26 **Cable check - Motor movement too large**

Cause	Remedy	Severity/response
Phases in the motor cable reversed. The axis was moved manually. Motor parameters are set incorrectly. For synchronous motors: The pole position is set incorrectly. For motors with holding brake: The brake was opened prematurely by an external source.	Check motor cabling. Avoid manual movement. Check number of pole pairs and motor type. Carry out the pole position identification Do not open the brake until you have checked the wiring.	Fault

537526055 | 0x2009FF27 **Cable check - Wrong motor angle detected**

Cause	Remedy	Severity/response
The determined angle between rotor and resolver differs from the setting in 0x2C03:002. The determined angle between rotor and encoder differs from the setting in 0x2C03:004.	Check encoder cabling. Check motor cabling. If appropriate, Carry out the pole position identification	Fault

537526070 | 0x2009FF36 **Warning - Brake resistor overload**

Cause	Remedy	Severity/response
The calculated thermal load of the brake resistor has reached the warning threshold set in 0x2550:008. The regenerative energy is too high.	• Check drive dimensioning. • Check settings for the brake energy management. Note: The warning status is reset if the thermal load falls below the warning threshold of -20 %.	Warning

Related topics

▸ Use of a brake resistor 459

537526080 | 0x2009FF40 **Error - Brake transistor**

Cause	Remedy	Severity/response
The short-circuit monitoring of the brake transistor has triggered.	Use brake resistor with a greater resistance value. Use external brake chopper. Use regenerative module.	Fault

537526081 | 0x2009FF41 **Error - Charging circuit**

Cause	Remedy	Severity/response
The monitoring of the charge relay has responded.	Acknowledge error. If the error persists, contact the manufacturer.	Fault

537526082 | 0x2009FF42 **Mains phase failure**

Cause	Remedy	Severity/response
The mains phase monitoring has triggered.	Check mains connection.	Fault

537526096 | 0x2009FF50 **General error (see manual)**

Cause	Remedy	Severity/response
An error has been triggered in the technology application, the PLC or in the network, which requires a direct error response from the drive.	1. Search logbook for the triggering error in the other component. 2. Eliminate the triggering error. The error message can now be acknowledged. If this is not possible, contact the manufacturer.	Fault

537526097 | 0x2009FF51 **Internal communication to PLC failed**

Cause	Remedy	Severity/response
The internal communication between the application and the base firmware is disturbed.	Restart device.	Fault

671158529 | 0x28011101 **Initialization - Parameter value could not be written**

Cause	Remedy	Severity/response
Initialization - Parameter value could not be written	For information only. No remedy necessary.	Information

671158530 | 0x28011102 **Load default setting - Parameter value could not be written**

Cause	Remedy	Severity/response
Write access denied with corresponding error message.	Evaluate parameter value based on the error message in the logbook. Correct parameter value accordingly.	Warning

671158785 | 0x28011201 **Parameters - Initialization failed**

Cause	Remedy	Severity/response
Not all parameters could be initialized.	See related entries in the logbook.	Warning

671158786 | 0x28011202 **Parameters - Loading default values failed**

Cause	Remedy	Severity/response
Not all presets could be written.	See related entries in the logbook.	Warning

671158787 | 0x28011203 **Parameters - Loading TA default values failed**

Cause	Remedy	Severity/response
Not all presets of the technology application could be written.	See related entries in the logbook.	Warning

671159298 | 0x28011402 **Opening the parameter description failed**

Cause	Remedy	Severity/response
Parameter description is missing or faulty.	Update boot project or device firmware.	Fault

671159299 | 0x28011403 **Opening the parameter set failed**

Cause	Remedy	Severity/response
Parameter set file is missing or faulty.	Update boot project or restart device.	Fault

671219713 | 0x28020001 **Logbook: Corrupt restore data**

Cause	Remedy	Severity/response
Logbook: Corrupt restore data	For information only. No remedy necessary.	Information

671219773 | 0x2802003D **Logbook cleared**

Cause	Remedy	Severity/response
Logbook cleared	For information only. No remedy necessary.	Information

671219776 | 0x28020040 **Logbook: Timeout restoring data**

Cause	Remedy	Severity/response
Logbook: Timeout restoring data	For information only. No remedy necessary.	Information

671219777 | 0x28020041 **Logbook: Error restoring data**

Cause	Remedy	Severity/response
Logbook: Error restoring data	For information only. No remedy necessary.	Information

671219778 | 0x28020042 **First boot with this firmware version**

Cause	Remedy	Severity/response
First boot with this firmware version	For information only. No remedy necessary.	Information

671219779 | 0x28020043 **Logbook was restored.**

Cause	Remedy	Severity/response
Logbook was restored.	For information only. No remedy necessary.	Information

671219780 | 0x28020044 **Logbook: Error reading persistent data.**

Cause	Remedy	Severity/response
Logbook: Error reading persistent data.	For information only. No remedy necessary.	Information

671263317 | 0x2802AA55 **The chronology of the logbook is not consistent**

Cause	Remedy	Severity/response
The chronology of the logbook is not consistent	For information only. No remedy necessary.	Information

671354881 | 0x28041001 **CmpLenzeErrorManagementAccess loaded without errors**

Cause	Remedy	Severity/response
CmpLenzeErrorManagementAccess loaded without errors	For information only. No remedy necessary.	Information

671420673 | 0x28051101 **Test-Mode - More Application Credit required, application is starting delayed**

Cause	Remedy	Severity/response
The "Application-Credit" is not sufficient for the application. The start of the application is delayed.	Use SD card with sufficient "Application-Credit".	Warning

671420674 | 0x28051102 **Application-Credit - Invalid license data**

Cause	Remedy	Severity/response
Faulty license data was detected when the "Application-Credit" was loaded.	Use SD card with valid license data.	Warning

671420675 | 0x28051103 **Application-Credit - License data missing**

Cause	Remedy	Severity/response
No license data was found on the SD card when then the "Application-Credit" was loaded.	Use SD card with valid license data.	Warning

671421185 | 0x28051301 **Boot application - More Application Credit required**

Cause	Remedy	Severity/response
The "Application-Credit" is not sufficient for the boot application. Booting is delayed.	Use SD card with sufficient "Application-Credit".	Warning

671809799 | 0x280B0107 **Application was downloaded.**

Cause	Remedy	Severity/response
Application was downloaded.	For information only. No remedy necessary.	Information

704663680 | 0x2A005080 **Internal error - AIS**

Cause	Remedy	Severity/response
Internal error	Restart the device. If the error persists, replace the device.	Warning

704663681 | 0x2A005081 **Internal error - AIE**

Cause	Remedy	Severity/response
Internal error	Restart the device. If the error persists, replace the device.	Warning

704663682 | 0x2A005082 **Internal error - Button S82**

Cause	Remedy	Severity/response
Internal error	Restart the device. If the error persists, replace the device.	Warning

704663691 | 0x2A00508B **SD-Inx/CLx - Error**

Cause	Remedy	Severity/response
Internal error	Restart the device. If the error persists, replace the device.	Warning

704663692 | 0x2A00508C **Internal switch-off path - Error**

Cause	Remedy	Severity/response
Internal error	Restart the device. If the error persists, replace the device.	Warning

704663693 | 0x2A00508D **Internal switch-off path - Test pulse error**

Cause	Remedy	Severity/response
Internal error	Restart the device. If the error persists, replace the device.	Warning

704663828 | 0x2A005114 **Reference voltage error**

Cause	Remedy	Severity/response
Internal error	Restart the device. If the error persists, replace the device.	Warning

704663829 | 0x2A005115 **6 V voltage error**

Cause	Remedy	Severity/response
Internal error	Restart the device. If the error persists, replace the device.	Warning

704663830 | 0x2A005116 **5 V voltage error**

Cause	Remedy	Severity/response
Internal error	Restart the device. If the error persists, replace the device.	Warning

704663831 | 0x2A005117 **3.3 V voltage error**

Cause	Remedy	Severity/response
Internal error	Restart the device. If the error persists, replace the device.	Warning

704668032 | 0x2A006180 **Internal error - STO activated**

Cause	Remedy	Severity/response
Internal error	Restart the device. If the error persists, replace the device.	Warning

704668037 | 0x2A006185 **Communication error - Basic device**

Cause	Remedy	Severity/response
Internal error	Restart the device. If the error persists, replace the device.	Warning

704668038 | 0x2A006186 **Synchronization error - Basic device**

Cause	Remedy	Severity/response
Internal error	Restart the device. If the error persists, contact the manufacturer.	Information

704668544 | 0x2A006380 **F-parameter error**

Cause	Remedy	Severity/response
Error in the PROFIsafe parameter setting The F-PLC is parameterized incorrectly.	Check PROFIsafe component. Check network cable. Analyze the error history of the higher-level controller.	Information

704668545 | 0x2A006381 **F_Dest_Add unequal F-address**

Cause	Remedy	Severity/response
The safety address F_Dest_Add in the higher-level controller and the F address in the device are different.	Adapt safety addresses.	Information

704668546 | 0x2A006382 **F_Dest_Add = 0 or FFFFhex**

Cause	Remedy	Severity/response
The safety address F_Dest_Add in the higher-level controller is invalid.	Adapt safety address.	Information

704668547 | 0x2A006383 **F_Source_Add = 0 or FFFFhex**

Cause	Remedy	Severity/response
The safety address F_Source_Add in the higher-level controller is invalid.	Adapt safety address.	Information

704668549 | 0x2A006385 **F_SIL exceeds technical SIL**

Cause	Remedy	Severity/response
The SIL parameterized in the higher-level controller is greater than the technically possible SIL of the device.	Adapt parameter setting in the higher-level controller.	Information

704668550 | 0x2A006386 **F_CRC_Length error**

Cause	Remedy	Severity/response
The data length of the F_CRC in the higher-level controller is faulty.	Check safety parameter in the higher-level controller.	Information

704668551 | 0x2A006387 **Wrong F-parameter version**

Cause	Remedy	Severity/response
The F parameter version is not supported by the device.	Select supported F parameter version in the higher-level controller.	Information

704668553 | 0x2A006389 **New safety parameter set deleted**

Cause	Remedy	Severity/response
New safety parameter set deleted	For information only. No remedy necessary.	Information

704668554 | 0x2A00638A **New safety parameter set loaded**

Cause	Remedy	Severity/response
New safety parameter set loaded	For information only. No remedy necessary.	Information

704668555 | 0x2A00638B **Memory module - Access error**

Cause	Remedy	Severity/response
Error accessing the safe parameter set on the SD card.	Reset safe parameter set in the device. Reload safe parameter set.	Warning

704668556 | 0x2A00638C **Different safety parameter sets**

Cause	Remedy	Severity/response
The safe parameter sets on the SD card and in the device are different.	Load a safe parameter set from the SD card into the device.	Warning

704668557 | 0x2A00638D **Extended Safety - No safety parameter set**

Cause	Remedy	Severity/response
No safe parameter set was found in the device.	Load safe parameter set into the device.	Warning

704668558 | 0x2A00638E **Extended Safety - Safety parameter set defect**

Cause	Remedy	Severity/response
The safe parameter set in the device is faulty.	Load safe parameter set into the device.	Warning

704668560 | 0x2A006390 **Safety parameter set - Plausibility error**

Cause	Remedy	Severity/response
The set safety parameters are not plausible.	Determine error number in 0x2115:005 and analyze it using the plausibility error table. Eliminate error Reload safe parameter set.	Warning

704668561 | 0x2A006391 **Safety parameter set - Communication error**

Cause	Remedy	Severity/response
A communication error has occurred while loading the safe parameter set.	Check communication settings. Check SD card. Reload safe parameter set.	Warning

704668562 | 0x2A006392 **Different safety addresses detected**

Cause	Remedy	Severity/response
The safety addresses in the device and on the SD card are different.	Adapt safety addresses. Load and save the safe parameter set again.	Warning

704668563 | 0x2A006393 **SSM - Wrong PDO version**

Cause	Remedy	Severity/response
Safe speed monitoring is faulty because the PDO version of the data protocol is incompatible.	Only devices with firmware > V1.0 support Extended Safety.	Warning

704676234 | 0x2A00818A **PROFIsafe passivated**

Cause	Remedy	Severity/response
Error in the PROFIsafe communication PROFIsafe was passivated.	Check PROFIsafe component. Check network cable. Analyze the error history of the higher-level controller.	Information

704676235 | 0x2A00818B **PROFIsafe has left data exchange**

Cause	Remedy	Severity/response
Error in the PROFIsafe communication PROFIsafe has left data exchange.	Check PROFIsafe component. Check network cable. Analyze the error history of the higher-level controller.	Information

704676237 | 0x2A00818D **PROFIsafe - CRC1 error**

Cause	Remedy	Severity/response
The F-Parameter-CRC is faulty.	Check F-Parameter-CRC (CRC1) in the higher-level controller. Check device description file (GSDML).	Information

704676245 | 0x2A008195 **FSoE - Unexpected command**

Cause	Remedy	Severity/response
Unexpected FSoE command received.	Check FSoE configuration. Restart communication.	Information

704676246 | 0x2A008196 **FSoE - Unknown command**

Cause	Remedy	Severity/response
Unknown FSoE command received.	Check FSoE configuration. Restart communication.	Information

704676247 | 0x2A008197 **FSoE - Invalid connection ID**

Cause	Remedy	Severity/response
FSoE frame with invalid connection ID received.	Check FSoE configuration. Restart communication.	Information

704676248 | 0x2A008198 **FSoE - CRC error**

Cause	Remedy	Severity/response
The check of the CRC in the FSoE frames reports errors.	Check FSoE configuration. Restart communication.	Information

704676249 | 0x2A008199 **FSoE - Watchdog expired**

Cause	Remedy	Severity/response
FSoE watchdog elapsed.	Check set watchdog time in FSoE master and adapt if necessary.	Information

704676252 | 0x2A00819C **FSoE - Invalid communication parameter data**

Cause	Remedy	Severity/response
Invalid communication parameter data received.	Check setting of the communication parameters.	Information

704676253 | 0x2A00819D **FSoE - Invalid application parameter length**

Cause	Remedy	Severity/response
The length of the application parameters transmitted by the FSoE master differs from the expected length.	Check setting of the communication parameters.	Information

704676254 | 0x2A00819E **FSoE - Invalid application parameter data**

Cause	Remedy	Severity/response
Invalid application parameter data received.	Check setting of the communication parameters.	Information

704676255 | 0x2A00819F **FSoE - Passivated**

Cause	Remedy	Severity/response
Due to an error, FSoE was passivated.	Check FSoE configuration. Reset error.	Information

704676264 | 0x2A0081A8 **FSoE - Invalid slave address**

Cause	Remedy	Severity/response
The slave address transmitted by the FSoE master differs from the slave address set in the device.	Check slave address in the FSoE master. Check parameter setting in the device.	Information

704676265 | 0x2A0081A9 **FSoE - Invalid communication parameter length**

Cause	Remedy	Severity/response
The length of the communication parameter transmitted by the FSoE master differs from the expected length.	Check setting of the communication parameters.	Information

704676266 | 0x2A0081AA **FSoE - Data exchange left**

Cause	Remedy	Severity/response
Due to an error FSoE has left the data exchange.	Check FSoE configuration. Reset error.	Information

704680064 | 0x2A009080 **Discrepancy check or function check error - SD-In1**

Cause	Remedy	Severity/response
Signal error at safe input SD-In1.	Check parameter setting. Check wiring.	Warning

704680065 | 0x2A009081 **Discrepancy check or function check error - SD-In2**

Cause	Remedy	Severity/response
Signal error at safe input SD-In2.	Check parameter setting. Check wiring.	Warning

704680066 | 0x2A009082 **Discrepancy check or function check error - SD-In3**

Cause	Remedy	Severity/response
Signal error at safe input SD-In3.	Check parameter setting. Check wiring.	Warning

704680067 | 0x2A009083 **Discrepancy check or function check error - SD-In4**

Cause	Remedy	Severity/response
Signal error at safe input SD-In4.	Check parameter setting. Check wiring.	Warning

704680069 | 0x2A009085 **Disabled SD-In2 = HIGH**

Cause	Remedy	Severity/response
Initialization error or parameterization error. HIGH level detected at the deactivated safe input.	Check parameter setting. Check wiring.	Warning

704680070 | 0x2A009086 **Disabled SD-In3 = HIGH**

Cause	Remedy	Severity/response
Initialization error or parameterization error. HIGH level detected at the deactivated safe input.	Check parameter setting. Check wiring.	Warning

704680071 | 0x2A009087 **Disabled SD-In4 = HIGH**

Cause	Remedy	Severity/response
Initialization error or parameterization error. HIGH level detected at the deactivated safe input.	Check parameter setting. Check wiring.	Warning

704680072 | 0x2A009088 **SD-Out1 - Channel A remains stuck at HIGH**

Cause	Remedy	Severity/response
Channel A of SD_Out1 cannot be deactivated.	Check wiring for short circuit.	Warning

704680073 | 0x2A009089 **SD-Out1 - Channel A remains stuck at LOW**

Cause	Remedy	Severity/response
Channel A of SD_Out1 cannot be activated.	Check wiring. Check supply voltage.	Warning

704680074 | 0x2A00908A **SD-Out1 - Channel B remains stuck at HIGH**

Cause	Remedy	Severity/response
Channel B of SD_Out1 cannot be deactivated.	Check wiring for short circuit.	Warning

704680075 | 0x2A00908B **SD-Out1 - Channel B remains stuck at LOW**

Cause	Remedy	Severity/response
Channel B of SD_Out1 cannot be activated.	Check wiring. Check supply voltage.	Warning

704680076 | 0x2A00908C **SD-In1 - Channel A remains stuck at HIGH**

Cause	Remedy	Severity/response
Channel A of SD_In1 cannot be deactivated.	Check wiring for short circuit. Check configuration of the safe input.	Warning

704680077 | 0x2A00908D **SD-In1 - Channel B remains stuck at HIGH**

Cause	Remedy	Severity/response
Channel B of SD_In1 cannot be deactivated.	Check wiring for short circuit. Check configuration of the safe input.	Warning

704680078 | 0x2A00908E **SD-In2 - Channel A remains stuck at HIGH**

Cause	Remedy	Severity/response
Channel A of SD_In2 cannot be deactivated.	Check wiring for short circuit. Check configuration of the safe input.	Warning

704680079 | 0x2A00908F **SD-In2 - Channel B remains stuck at HIGH**

Cause	Remedy	Severity/response
Channel B of SD_In2 cannot be deactivated.	Check wiring for short circuit. Check configuration of the safe input.	Warning

704680080 | 0x2A009090 **SD-In3 - Channel A remains stuck at HIGH**

Cause	Remedy	Severity/response
Channel A of SD_In3 cannot be deactivated.	Check wiring for short circuit. Check configuration of the safe input.	Warning

704680081 | 0x2A009091 **SD-In3 - Channel B remains stuck at HIGH**

Cause	Remedy	Severity/response
Channel B of SD_In3 cannot be deactivated.	Check wiring for short circuit. Check configuration of the safe input.	Warning

704680082 | 0x2A009092 **SD-In4 - Channel A remains stuck at HIGH**

Cause	Remedy	Severity/response
Channel A of SD_In4 cannot be deactivated.	Check wiring for short circuit. Check configuration of the safe input.	Warning

704680083 | 0x2A009093 **SD-In4 - Channel B remains stuck at HIGH**

Cause	Remedy	Severity/response
Channel B of SD_In4 cannot be deactivated.	Check wiring for short circuit. Check configuration of the safe input.	Warning

704680084 | 0x2A009094 **CLA/CLB - Short circuit**

Cause	Remedy	Severity/response
Short circuit at the CLA/CLB clock outputs.	Check wiring.	Warning

704708488 | 0x2A00FF88 **SS1/SS2 - Stop time exceeded**

Cause	Remedy	Severity/response
The speed threshold "n = 0" was not reached within the stopping time.	Increase SS1/SS2- stopping time. Reduce delay time in drive.	Warning

704708489 | 0x2A00FF89 **SLS1 - Nlim1 exceeded**

Cause	Remedy	Severity/response
The safely limited speed SLS1 has been exceeded.	Adapt the speed-dependent parameters in the drive. Increase safely limited speed.	Warning

704708490 | 0x2A00FF8A **SLS2 - Nlim2 exceeded**

Cause	Remedy	Severity/response
The safely limited speed SLS2 has been exceeded.	Adapt the speed-dependent parameters in the drive. Increase safely limited speed.	Warning

704708491 | 0x2A00FF8B **SLS3 - Nlim3 exceeded**

Cause	Remedy	Severity/response
The safely limited speed SLS3 has been exceeded.	Adapt the speed-dependent parameters in the drive. Increase safely limited speed.	Warning

704708492 | 0x2A00FF8C **SLS4 - Nlim4 exceeded**

Cause	Remedy	Severity/response
The safely limited speed SLS4 has been exceeded.	Adapt the speed-dependent parameters in the drive. Increase safely limited speed.	Warning

704708493 | 0x2A00FF8D **SLS/SMS - Error stop not executed**

Cause	Remedy	Severity/response
A safely limited speed (SLS1-SLS4) or the maximum speed (SMS) has been exceeded. The error was not reported within the parameterized response time.	Adapt the speed-dependent parameters in the drive. Increase response time.	Warning

704708494 | 0x2A00FF8E **SDIpos - Wrong direction**

Cause	Remedy	Severity/response
The drive has moved too far in the wrong direction.	Adapt the parameterization of the higher-level controller. Increase 0x28BA:003 tolerance threshold	Warning

704708495 | 0x2A00FF8F **SDIneg - Wrong direction**

Cause	Remedy	Severity/response
The drive has moved too far in the wrong direction.	Adapt the parameterization of the higher-level controller. Increase 0x28BA:003 tolerance threshold	Warning

704708496 | 0x2A00FF90 **SMS - Nmax exceeded**

Cause	Remedy	Severity/response
The drive has exceeded the parameterized safe maximum speed (SMS).	Adapt the maximum speed in the drive.	Warning

704708497 | 0x2A00FF91 **SOS - Tolerance limit exceeded**

Cause	Remedy	Severity/response
The position change during SOS is greater than the parameterized tolerance window 0x289F:001.	Increase tolerance window Adapt response time of encoder monitoring.	Warning

704708498 | 0x2A00FF92 **No feedback system configured**

Cause	Remedy	Severity/response
An attempt was made to call up a speed-based or position-based safety function although no feedback is configured.	Configure suitable feedback.	Warning

704708499 | 0x2A00FF93 **CAS - Round trip time exceeded**

Cause	Remedy	Severity/response
The maximum allowed time between activation of the cascading and the feedback of the nodes was exceeded.	Set the input delay of SD-In4 0x211A:004 to ≤ 10 ms. Check wiring between the nodes.	Warning

704708500 | 0x2A00FF94 **CAS - Hardware or discrepancy error**

Cause	Remedy	Severity/response
The hardware did not turn off the cascading output fast enough. A discrepancy error has occurred at the cascading input.	Check wiring between the nodes.	Warning

704708501 | 0x2A00FF95 **SS1/SS2 - Speed ramp exceeded**

Cause	Remedy	Severity/response
Ramp monitoring has responded because monitoring limits have been exceeded.	Adapt parameters for ramp monitoring. (0x2894) Deactivate ramp monitoring.	Warning

704708502 | 0x2A00FF96 **SLI - Safely limited increment exceeded**

Cause	Remedy	Severity/response
The maximum permissible position change (0x28CA:001, 0x28CA:003) was exceeded.	Adapt parameters for SLI.	Warning

704708503 | 0x2A00FF97 **SLP1 - Position limits exceeded**

Cause	Remedy	Severity/response
The upper or lower position limit of SLP1 has been exceeded.	Adapt parameters for SLP1. Increase the distance to the position limits in the application.	Warning

704708504 | 0x2A00FF98 **SLP2 - Position limits exceeded**

Cause	Remedy	Severity/response
The upper or lower position limit of SLP2 has been exceeded.	Adapt parameters for SLP2. Increase the distance to the position limits in the application.	Warning

704708505 | 0x2A00FF99 **SLP3 - Position limits exceeded**

Cause	Remedy	Severity/response
The upper or lower position limit of SLP3 has been exceeded.	Adapt parameters for SLP3. Increase the distance to the position limits in the application.	Warning

704708506 | 0x2A00FF9A **SLP4 - Position limits exceeded**

Cause	Remedy	Severity/response
The upper or lower position limit of SLP4 has been exceeded.	Adapt parameters for SLP4. Increase the distance to the position limits in the application.	Warning

704708507 | 0x2A00FF9B **SLP - No home position**

Cause	Remedy	Severity/response
SLP has been commissioned, but the home position is unknown.	Check status of the safe reference. (0x2882:006)	Warning

704708509 | 0x2A00FF9D **PDSS - Velocity exceeded**

Cause	Remedy	Severity/response
The drive has exceeded the current allowed speed for PDSS.	Check parameters for PDSS. Reduce speeds in the application. Increase distance to PDSS limit values.	Warning

704708510 | 0x2A00FF9E **PDSS - Creep velocity SCS exceeded**

Cause	Remedy	Severity/response
The drive has exceeded the currently permitted SCS creeping speed.	Check parameters for PDSS. Reduce speeds in the application. Increase distance to PDSS limit values.	Warning

704708511 | 0x2A00FF9F **PDSS - No diagnostic mark detected**

Cause	Remedy	Severity/response
No diagnostic marker for PDSS was detected.	Adapt parameters for the diagnostic marker. Check the function of the diagnostic sensors. Correct position of the diagnostic sensors.	Warning

704708512 | 0x2A00FFA0 **PDSS - Diagnostic mark detected at invalid position**

Cause	Remedy	Severity/response
A diagnostic marker for PDSS was detected at an invalid position.	Adapt parameters for the diagnostic marker. Correct position of the diagnostic sensors.	Warning

704708518 | 0x2A00FFA6 **SHom - Time-out**

Cause	Remedy	Severity/response
After SHom_Start, the home position was not detected within the timeout set in 0x2882:002.	Adapt timeout. Check configuration of triggers for SHom_Start and SHom_Load.	Warning

704708519 | 0x2A00FFA7 **SHom - Home position deleted**

Cause	Remedy	Severity/response
The home position was deleted by acknowledging a position error or manually via 0x2114:014.	Execute SHom again.	Information

704708520 | 0x2A00FFA8 **SHom - Maximum slip value exceeded**

Cause	Remedy	Severity/response
The maximum permissible slip has been exceeded.	Evaluate slip monitoring in 0x2870:2. Check the wear-prone drive components and replace then if necessary.	Warning

704708521 | 0x2A00FFA9 **SHom - Tolerance of start position exceeded**

Cause	Remedy	Severity/response
The tolerance for the starting position has been exceeded.	Do not move drive components while the mains voltage is switched off. Execute SHom again.	Warning

704708522 | 0x2A00FFAA **SHom - Tolerance of position comparison exceeded**

Cause	Remedy	Severity/response
The tolerance for the position comparison has been exceeded.	Check gearbox factor and mounting direction. Check the wear-prone drive components and replace then if necessary. Execute SHom again.	Warning

704708523 | 0x2A00FFAB **SSM - Invalid safe velocity**

Cause	Remedy	Severity/response
No safe speed could be determined. The encoder is not initialized or the status transmitted by the encoder is invalid.	Check encoder. A certified motor/encoder combination must be used.	Warning

704708524 | 0x2A00FFAC **SSM - Encoder error**

Cause	Remedy	Severity/response
The monitoring of the safe speed via encoder is faulty.	Check encoder. Check configuration of the encoder.	Warning

704708525 | 0x2A00FFAD **SSM - Resolver error**

Cause	Remedy	Severity/response
The monitoring of the safe speed via resolver is faulty.	Check encoder. Check configuration of the encoder.	Warning

704708526 | 0x2A00FFAE **SSM - Error in standard device data**

Cause	Remedy	Severity/response
Safe speed monitoring is faulty because the device is transmitting incorrect data.	Check encoder. Check configuration of the encoder.	Warning

704708527 | 0x2A00FFAF **SSM - Speed deviation too high**

Cause	Remedy	Severity/response
The difference between the internally calculated speed and the speed transmitted by the encoder is too large.	Check configuration of the encoder. Check gearbox factor. Check tolerance for the deviation.	Warning

704708528 | 0x2A00FFB0 **SSM - Synchronization error**

Cause	Remedy	Severity/response
Internal error	Restart the device. If the error persists, contact the manufacturer.	Warning

738214504 | 0x2C004268 **Modulo axis is required**

Cause	Remedy	Severity/response
Instead of a Modulo axis, a linear axis is connected.	Check the setting of the travel range. Parameterize the traversing range of the axis to Modulo.	Fault

738214507 | 0x2C00426B **Start position outside cycle length**

Cause	Remedy	Severity/response
The starting position is outside the valid cycle length of the axis.	Set starting position to a value smaller than the parameterized cycle length.	Fault

738214508 | 0x2C00426C **Different cycle lengths**

Cause	Remedy	Severity/response
The connected axes have different cycle lengths.	Adjust the cycle lengths of the axes used.	Fault

738214509 | 0x2C00426D **Invalid direction of rotation**

Cause	Remedy	Severity/response
Invalid direction of rotation	Check selection of the rotating direction.	Fault

738214510 | 0x2C00426E **Mark stack - Limit reached**

Cause	Remedy	Severity/response
The length of the stacks of the end marks have been exceeded as the distance between touch probe sensor and tool is bigger than the length of the register.	Reduce the distance between the touch probe sensor and the tool.	Fault

738214511 | 0x2C00426F **Number of virtual marks exceeded**

Cause	Remedy	Severity/response
Maximum number of virtual marks was exceeded.	Increase setting for maximum permissible virtual marks.	Fault

738214512 | 0x2C004270 **Invalid synchronization parameters**

Cause	Remedy	Severity/response
Invalid parameter setting of the synchronization	Check parameterization of the line synchronization.	Fault

738214513 | 0x2C004271 **Invalid parameter setting for jogging**

Cause	Remedy	Severity/response
Invalid parameter setting of the manual jog function (jogging)	Check parameter setting.	Fault

738214514 | 0x2C004272 **Invalid deceleration ramp for stop function (lrStopDec <= 0)**

Cause	Remedy	Severity/response
Invalid deceleration ramp for the stop function	Check parameter setting.	Fault

738214515 | 0x2C004273 **Invalid diameter**

Cause	Remedy	Severity/response
Invalid value for the diameter	Check parameterization of the minimum diameter.	Fault

738214516 | 0x2C004274 **Torque follower not cannot be activated**

Cause	Remedy	Severity/response
The torque follower cannot be activated.	Check that the axis is free of errors. Deactivate stop function.	Fault

738214517 | 0x2C004275 **Speed follower cannot be activated**

Cause	Remedy	Severity/response
The speed follower cannot be activated.	Check that the axis is free of errors. Deactivate stop function.	Fault

738214518 | 0x2C004276 **Invalid AxisRef connected to function**

Cause	Remedy	Severity/response
The referenced axis (AXIS_REF) is invalid.	The function is not supported for the axis used.	Fault

738214519 | 0x2C004277 **Motor parameters could not be read**

Cause	Remedy	Severity/response
The access to the motor parameters via SDO has failed.	Check EtherCAT status. Possibly the connected axis is not accessible.	Fault

738214520 | 0x2C004278 **Lower speed limit parameter is not mapped**

Cause	Remedy	Severity/response
The process image (mapping) cannot be reached for the lower speed limit.	Add the lower speed limitation the EtherCAT mapping of the drive. 0x2946:002	Fault

738214521 | 0x2C004279 **Upper speed limit parameter is not mapped**

Cause	Remedy	Severity/response
The process image (mapping) cannot be reached for the upper speed limit.	Add the upper speed limitation the EtherCAT mapping of the drive. 0x2946:001	Fault

738214522 | 0x2C00427A **Torque setpoint parameter is not mapped**

Cause	Remedy	Severity/response
The process image (mapping) cannot be reached for the feedforward control of the torque.	Add the torque offset to the EtherCAT mapping of the drive. 0x60B2	Fault

738214523 | 0x2C00427B **Dancer position outside the defined range**

Cause	Remedy	Severity/response
The dancer position is outside of the defined area.	Check the reference values for the upper and lower dancer positions.	Fault

738214524 | 0x2C00427C **Dancer limits are invalid**

Cause	Remedy	Severity/response
The dancer limit positions are invalid.	Check the reference values for the upper and lower dancer positions.	Fault

738214525 | 0x2C00427D **Invalid parameter setting for clutch**

Cause	Remedy	Severity/response
The parameter setting of the coupling is invalid.	Check coupling parameters.	Fault

738214526 | 0x2C00427E **TM was not called cyclic**

Cause	Remedy	Severity/response
The technology module was not called cyclically.	Ensure that the TM is called once in each cycle in the motion task.	Fault

738214534 | 0x2C004286 **Invalid number of cam points**

Cause	Remedy	Severity/response
The number of points in the cam is invalid.	Check specified cam.	Fault

738214604 | 0x2C0042CC **Clutching not possible (master axis is moving)**

Cause	Remedy	Severity/response
Coupling to the master axis is not possible as the master axis is moving.	Stop master axis or use another coupling mode.	Fault

738214605 | 0x2C0042CD **Invalid parameter setting of product length**

Cause	Remedy	Severity/response
The parameter setting of the product length is invalid.	The set product length is too small.	Fault

738214606 | 0x2C0042CE **Position of the touch probe sensor unknown**

Cause	Remedy	Severity/response
The home position of the touch probe sensor is not known.	Execute the teach function of the mark sensor.	Fault

738214607 | 0x2C0042CF **Gap occurred in the slave axis**

Cause	Remedy	Severity/response
A discontinuity in the slave axis has occurred.	None	Fault

738214608 | 0x2C0042D0 **Gap occurred in the master axis**

Cause	Remedy	Severity/response
A discontinuity in the master axis has occurred.	None	Fault

738214609 | 0x2C0042D1 **Internal error**

Cause	Remedy	Severity/response
Internal error from the internal calculation in the technology module.	None	Fault

738214610 | 0x2C0042D2 **Invalid parameter setting of synchronous phase**

Cause	Remedy	Severity/response
The parameter setting of the synchronous angle is invalid. The sum of all synchronous phases exceeds an angle of 360 °.	Check parameterization for the number of tools and for the cutting angle.	Fault

738214611 | 0x2C0042D3 **Invalid parameter setting of the cross cutter for cutting operation**

Cause	Remedy	Severity/response
The parameter setting of the cross cutter for the cutting operation is invalid.	Check parameterization for the number of tools , the cutting angle, the circumference and the scaling of the master.	Fault

738214612 | 0x2C0042D4 **Invalid parameter setting of cutting length**

Cause	Remedy	Severity/response
The parameter setting of the cutting length is invalid. The cutting length is not equal to the sum of the individual product lengths.	Check parameterization of the cutting length.	Fault

738214613 | 0x2C0042D5 **Slave axis outside parking position**

Cause	Remedy	Severity/response
Clutching in to the master axis is not possible as the slave axis is outside the parking position.	Move slave axis to parking position.	Fault

738214614 | 0x2C0042D6 **Master axis changes the direction of rotation**

Cause	Remedy	Severity/response
The master axis changes the direction of rotation.	Make sure that the master axis does not reverse.	Fault

738214615 | 0x2C0042D7 **Internal - Invalid cam selected**

Cause	Remedy	Severity/response
Internal error from the internal calculation in the technology module. An invalid cam was switched.	None	Fault

738214616 | 0x2C0042D8 **Selected axis is not supported**

Cause	Remedy	Severity/response
The function is not supported by the axis used.	None	Fault

738214617 | 0x2C0042D9 **Axis is not supported**

Cause	Remedy	Severity/response
The axis is not supported.	None	Fault

738214618 | 0x2C0042DA **Invalid parameter setting of profile**

Cause	Remedy	Severity/response
The parameter setting of the profile is invalid.	Check profile selection.	Fault

738214619 | 0x2C0042DB **Axis enabled is required**

Cause	Remedy	Severity/response
The axis has not been enabled or cannot be enabled because STO may be active.	Enable axis to be able to perform the requested action.	Fault

738214620 | 0x2C0042DC **Correction window out of cycle length measuring system**

Cause	Remedy	Severity/response
The parameters for the correction window are outside of the cycle length of the connected measuring system.	Adjust the parameterization of the correction window.	Fault

738214621 | 0x2C0042DD **Correction value larger than correction window**

Cause	Remedy	Severity/response
The correction value is greater than the available correction window.	None	Fault

738214627 | 0x2C0042E3 **Dancer limits not teached**

Cause	Remedy	Severity/response
The dancer limit positions have not been referenced.	Set dancer limit positions.	Fault

738214629 | 0x2C0042E5 **Position of the slave axis is greater than the upper limit set**

Cause	Remedy	Severity/response
The position of the slave axis is greater than the parameterized upper limit.	Check parameterization of the upper limit. Reference axis. Move the axis manually to the valid traversing range.	Fault

738214630 | 0x2C0042E6 **Position of the slave axis is smaller than the lower limit set**

Cause	Remedy	Severity/response
The position of the slave axis is greater than the parameterized lower limit.	Check parameterization of the lower limit. Reference axis. Move the axis manually to the valid traversing range.	Fault

738214631 | 0x2C0042E7 **Target position is greater than the upper limit set**

Cause	Remedy	Severity/response
The target position is greater than the parameterized upper limit.	Check parameterization of the upper limit.	Fault

738214632 | 0x2C0042E8 **Invalid mark position**

Cause	Remedy	Severity/response
The reported position of the mark sensor is outside the valid range.	Check controller settings. Minimize following errors.	Fault

738214633 | 0x2C0042E9 **Invalid positioning**

Cause	Remedy	Severity/response
An invalid positioning mode has been selected.	Check setting of the positioning mode.	Fault

738214644 | 0x2C0042F4 **TM not called in cyclic motion task**

Cause	Remedy	Severity/response
Invalid task cycle time	The TM must be called in the cyclic motion tasks.	Fault

738214654 | 0x2C0042FE **Invalid parameters of traversing profile**

Cause	Remedy	Severity/response
Errors have occurred in the calculation of the traversing profile.	Check all profile-relevant parameters of the TM.	Fault

738214655 | 0x2C0042FF **Invalid coil parameters**

Cause	Remedy	Severity/response
Errors have occurred in the calculation of the coil geometry.	Check parameterization of the coil.	Fault

738214656 | 0x2C004300 **Traversing angular shift limit reached**

Cause	Remedy	Severity/response
Errors have occurred in the calculation of the reverse offset.	Check parameterization of the reverse offset	Fault

738214658 | 0x2C004302 **DC bus undervoltage**

Cause	Remedy	Severity/response
The DC-bus voltage has fallen below the error threshold for undervoltage.	Check mains voltage. Check DC-bus voltage. Check mains settings. Check fuses.	Fault

738214659 | 0x2C004303 **Coupling mode supports modulo axes only**

Cause	Remedy	Severity/response
Coupling mode set incorrectly.	Check parameterization of the coupling mode.	Fault

738214661 | 0x2C004305 **X axis TM error**

Cause	Remedy	Severity/response
Source of the error is in the technology module	Check the error message of the X axis control.	Fault

738214662 | 0x2C004306 **Y axis TM error**

Cause	Remedy	Severity/response
Source of the error is in the technology module	Check the error message of the Y axis control.	Fault

738214668 | 0x2C00430C **Diameter calculation failed**

Cause	Remedy	Severity/response
The identification of the diameter could not be carried out. The maximum dancer position was reached before the diameter could be calculated.	Check parameterization of the identification.	Fault

738214669 | 0x2C00430D **Actual dancer position greater than maximum dancer position**

Cause	Remedy	Severity/response
During identification, the dancer position is greater than the parameterized maximum dancer position.	Lower dancer or adjust parameters.	Fault

738214670 | 0x2C00430E **Parameter lrIdentDiamMaxDancerPos is invalid**

Cause	Remedy	Severity/response
Invalid parameterization of the lrIdentDiamMaxDancerPos.	Set parameter larger than lrDancerPosCtrlLimitNeg and smaller than lrDancerPosCtrlLimitPos.	Fault

738214671 | 0x2C00430F **Value for stored material in dancer is invalid (=<0)**

Cause	Remedy	Severity/response
The parameter for specifying the saved material in the dancer is invalid.	For the identification of the diameter, the parameter must be > 0.	Fault

738214672 | 0x2C004310 **Loading the diameter during identification is not allowed**

Cause	Remedy	Severity/response
During identification, an attempt was made to load the diameter.	Loading the diameter during identification is not allowed.	Fault

738214673 | 0x2C004311 **Invalid master axis connected**

Cause	Remedy	Severity/response
Access to the MasterAxisRef has failed because there is no MasterAxis at the input.	Check if a master axis is connected.	Fault

738214695 | 0x2C004327 **Inversion of gearfactor not allowed. Velocity out of tolerance.**

Cause	Remedy	Severity/response
		Fault

738214696 | 0x2C004328 **AC Drive Profile - Invalid parameter configuration**

Cause	Remedy	Severity/response
Conflicting settings of 3 parameters for the AC Drive Profile: • 0x5020:026 AC Drive motor type • 0x5020:027 AC Drive Mode • 0x2C00 Motor control mode	Set a valid parameter combination.	Fault

738214697 | 0x2C004329 **Velocity high limit is lower than velocity low limit**

Cause	Remedy	Severity/response
		Fault

738214698 | 0x2C00432A **Selected set value mode is not supported**

Cause	Remedy	Severity/response
		Fault

738216504 | 0x2C004A38 **Invalid delay time for PT1 filter**

Cause	Remedy	Severity/response
A negative filter time constant has been indicated.	Check filter time constant. It must not be negative.	Fault

738216506 | 0x2C004A3A **Invalid mode for curve function**

Cause	Remedy	Severity/response
The selected cam mode is invalid.	Check parameter setting.	Fault

738216507 | 0x2C004A3B **Invalid compare mode**

Cause	Remedy	Severity/response
The selected comparison mode is invalid.	Check parameter setting.	Fault

738216509 | 0x2C004A3D **Invalid mode ConvAxisV**

Cause	Remedy	Severity/response
The selected compilation mode does not exist.	Check parameter setting.	Fault

738216510 | 0x2C004A3E **Process controller - Invalid delay time**

Cause	Remedy	Severity/response
A negative filter time constant has been indicated.	Check filter time constant. It must not be negative.	Fault

738216511 | 0x2C004A3F **Process controller - Invalid rate time**

Cause	Remedy	Severity/response
A negative rate time has been entered.	Check rate time. It must not be negative.	Fault

738216512 | 0x2C004A40 **Process controller - Invalid reset time**

Cause	Remedy	Severity/response
A negative reset time has been entered.	Check reset time. It must not be negative.	Fault

738216528 | 0x2C004A50 **Invalid mode for signal delay**

Cause	Remedy	Severity/response
Mode is invalid for signal delay	Check parameter setting.	Fault

738216534 | 0x2C004A56 **FrictComp - Aborted by restarting identification**

Cause	Remedy	Severity/response
Friction compensation was canceled because friction identification has been started.	None	Fault

738216535 | 0x2C004A57 **FrictComp - Aborted by disabling follower**

Cause	Remedy	Severity/response
Friction identification was canceled because the speed follower is not active.	Check if a stop or other motion leading action has been activated.	Fault

738216536 | 0x2C004A58 **FrictComp - Max. velocity could not be reached**

Cause	Remedy	Severity/response
The maximum speed for friction identification was not reached.	Check parameter setting.	Fault

738216537 | 0x2C004A59 **FrictComp - Acceleration too high**

Cause	Remedy	Severity/response
The acceleration for friction identification is too high.	Reduce acceleration ramp for friction identification.	Fault

738216538 | 0x2C004A5A **Min. diameter greater than max. diameter**

Cause	Remedy	Severity/response
The value for the minimum diameter is higher than the value for the maximum diameter.	Check parameter setting.	Fault

738216552 | 0x2C004A68 **IdentMInertia - Max. speed or max. torque too high**

Cause	Remedy	Severity/response
For the identification of the mass moment of inertia, entered values for the maximum velocity or the maximum torque are too high.	Check parameter setting.	Fault

738216553 | 0x2C004A69 **Aborted by restarting ident identification - IdentMInertia**

Cause	Remedy	Severity/response
The identification of the mass moment of inertia was canceled due to incorrect parameterization.	Check parameter setting.	Fault

738216554 | 0x2C004A6A **IdentMInertia - Aborted by disabling follower**

Cause	Remedy	Severity/response
The identification of the moment of inertia was canceled because the torque follower is not active.	Check if a stop or other motion leading action has been activated.	Fault

738216555 | 0x2C004A6B **IdentMInertia - Aborted by other function**

Cause	Remedy	Severity/response
The identification of the moment of inertia was canceled because an external source of torque follower started outside the identification.	Check if a stop or other motion leading action has been activated.	Fault

738216556 | 0x2C004A6C **IdentMInertia - Max velocity not reached**

Cause	Remedy	Severity/response
The maximum speed for identifying the dimensional moment of inertia was not reached.	Check parameter setting.	Fault

738216557 | 0x2C004A6D **IdentMInertia - Torque not reached**

Cause	Remedy	Severity/response
The maximum torque for identifying the moment of inertia was not reached.	Check parameter setting.	Fault

738217007 | 0x2C004C2F **Mark register - Max. number of TP exceeded**

Cause	Remedy	Severity/response
Multiple consecutive marks were not recorded.	Check mark sensor. Increase number of marks to be compensated.	Fault

738217305 | 0x2C004D59 **Identification mode not supported**

Cause	Remedy	Severity/response
The selected identification mode is not supported.	Select another identification mode.	Fault

738217307 | 0x2C004D5B **Motor rated speed =0**

Cause	Remedy	Severity/response
Invalid rated motor speed	Check the setting of the rated motor speed. This must not be 0.	Fault

738217308 | 0x2C004D5C **Motor moment of inertia = 0**

Cause	Remedy	Severity/response
Invalid motor mass moment of inertia	Check the setting of the motor mass moment of inertia. This must not be 0.	Fault

738217310 | 0x2C004D5E **Invalid start mode**

Cause	Remedy	Severity/response
Invalid parameter source specified for the identification start parameters.	Check parameter setting.	Fault

738217311 | 0x2C004D5F **Invalid natural frequency**

Cause	Remedy	Severity/response
Invalid natural frequency specified.	Check parameter setting.	Fault

738217312 | 0x2C004D60 **Invalid amplitude ratio**

Cause	Remedy	Severity/response
Invalid amplitude ratio specified.	Check parameter setting.	Fault

738217313 | 0x2C004D61 **Invalid compensation method**

Cause	Remedy	Severity/response
The set compensation method is invalid.	Check parameter setting.	Fault

738217314 | 0x2C004D62 **Compensation method cannot be changed**

Cause	Remedy	Severity/response
The compensation method cannot be changed during an active cross-fading phase.	Change the compensation method only at standstill.	Fault

738217505 | 0x2C004E21 **SDO access - General error**

Cause	Remedy	Severity/response
SDO access - general error	Check communication to the lower-level drive.	Fault

738217506 | 0x2C004E22 **SDO access - Invalid index**

Cause	Remedy	Severity/response
SDO access: Invalid index	Check whether the requested index exists in the lower-level drive.	Fault

738217507 | 0x2C004E23 **SDO access - Invalid offset**

Cause	Remedy	Severity/response
SDO access: Invalid offset	Check whether the requested index/subindex exists in the lower-level drive.	Fault

738217508 | 0x2C004E24 **SDO access - Invalid length**

Cause	Remedy	Severity/response
SDO access - invalid length value	Check whether the length of the requested index matches the length of the object in the lower-level drive.	Fault

738217509 | 0x2C004E25 **SDO access- Invalid data**

Cause	Remedy	Severity/response
SDO access - invalid data	Check communication to the lower-level drive.	Fault

738217510 | 0x2C004E26 **SDO access - Not ready**

Cause	Remedy	Severity/response
SDO access - the master is busy at the moment and cannot process the function.	Check communication to the lower-level drive.	Fault

738217511 | 0x2C004E27 **SDO access - Master is busy**

Cause	Remedy	Severity/response
SDO access - the master is busy at the moment and cannot process the function.	Check communication to the lower-level drive.	Fault

738217512 | 0x2C004E28 **SDO access - No memory**

Cause	Remedy	Severity/response
SDO access - not enough application memory available.	Check communication to the lower-level drive.	Fault

738217513 | 0x2C004E29 **SDO access - Invalid state**

Cause	Remedy	Severity/response
SDO access - invalid state	Check communication to the lower-level drive.	Fault

738217514 | 0x2C004E2A **SDO access - Invalid status**

Cause	Remedy	Severity/response
SDO access - invalid state	Check communication to the lower-level drive.	Fault

738217515 | 0x2C004E2B **SDO access - Time-out**

Cause	Remedy	Severity/response
SDO access - timeout	Check communication to the lower-level drive.	Fault

738217516 | 0x2C004E2C **SDO access - Invalid mailbox commands in current slave state**

Cause	Remedy	Severity/response
SDO access - mailbox commands not allowed in current slave state.	Check communication to the lower-level drive.	Fault

738217517 | 0x2C004E2D **SDO access - Cable not connected to the controller**

Cause	Remedy	Severity/response
SDO access - EtherCAT- cable is not connected to control.	Check communication to the lower-level drive.	Fault

738217519 | 0x2C004E2F **SDO access - All channels for SDO request busy**

Cause	Remedy	Severity/response
All channels for activating SDO are assigned.	Run fewer SDO jobs in parallel. Sequence SDO jobs.	Fault

738217524 | 0x2C004E34 **SDO - AbortCode 0x05030000 'Toggle bit not alternated'**

Cause	Remedy	Severity/response
The toggle bit has not been changed.	Check communication to the lower-level drive.	Fault

738217525 | 0x2C004E35 **SDO - AbortCode 0x05040000 'SDO protocol time-out'**

Cause	Remedy	Severity/response
'SDO protocol timeout	Check communication to the lower-level drive.	Fault

738217526 | 0x2C004E36 **SDO - AbortCode 0x05040001 'Client/server command specifier not valid or unknown'**

Cause	Remedy	Severity/response
Invalid or unknown specification symbol for the client/server command.	Check communication to the lower-level drive.	Fault

738217527 | 0x2C004E37 **SDO - AbortCode 0x05040002 'Invalid block size (block mode only)'**

Cause	Remedy	Severity/response
Invalid block size	Check communication to the lower-level drive.	Fault

738217528 | 0x2C004E38 **SDO - AbortCode 0x05040003 'Invalid sequence number (block mode only)'**

Cause	Remedy	Severity/response
Invalid sequence number	Check communication to the lower-level drive.	Fault

738217529 | 0x2C004E39 **SDO - AbortCode 0x05040004 'CRC error (block mode only)'**

Cause	Remedy	Severity/response
CRC error	Check communication to the lower-level drive.	Fault

738217530 | 0x2C004E3A **SDO - AbortCode 0x05040005 'Out of memory'**

Cause	Remedy	Severity/response
Not enough memory space available in the main memory.	Check communication to the lower-level drive.	Fault

738217531 | 0x2C004E3B **SDO - AbortCode 0x06010000 'Unsupported access to an object'**

Cause	Remedy	Severity/response
Access to an object denied.	Check whether the requested index exists in the lower-level drive.	Fault

738217532 | 0x2C004E3C **SDO - AbortCode 0x06010001 'Attempt to read a write only object'**

Cause	Remedy	Severity/response
Read access to a read protected object	The object in the lower-level drive does not allow read access.	Fault

738217533 | 0x2C004E3D **SDO - AbortCode 0x06010002 'Attempt to write a read only object'**

Cause	Remedy	Severity/response
Write access to a write-protected object	The object in the lower-level drive does not allow write access.	Fault

738217534 | 0x2C004E3E **SDO - AbortCode 0x06020000 'Object does not exist in the object dictionary'**

Cause	Remedy	Severity/response
No object was found in the object directory.	Check whether the requested index exists in the lower-level drive.	Fault

738217535 | 0x2C004E3F **SDO - AbortCode 0x06040041 'Object cannot be mapped to the PDO'**

Cause	Remedy	Severity/response
An object cannot be mapped into the PDO.	Check whether all objects are also supported as mappable objects.	Fault

738217536 | 0x2C004E40 **SDO - AbortCode 0x06040042 'Number and length of objects to be mapped exceed PDO length'**

Cause	Remedy	Severity/response
There are too many objects in the PDO mapping.	Reduce mapping.	Fault

738217537 | 0x2C004E41 **SDO - AbortCode 0x06040043 'General parameter incompatibility'**

Cause	Remedy	Severity/response
General message for parameter incompatibility.	None	Fault

738217538 | 0x2C004E42 **SDO - AbortCode 0x06040047 'General internal incompatibility in the device'**

Cause	Remedy	Severity/response
General message about internal incompatibility in the device.	None	Fault

738217539 | 0x2C004E43 **SDO - AbortCode 0x06060000 'Access failed due to an hardware error'**

Cause	Remedy	Severity/response
Failed access by hardware error	None	Fault

738217540 | 0x2C004E44 **SDO - AbortCode 0x06070010 'Data type or length of service parameters do not match'**

Cause	Remedy	Severity/response
Data type or parameter length differ.	Check whether the length of the requested index matches the length of the object in the lower-level drive.	Fault

738217541 | 0x2C004E45 **SDO - AbortCode 0x06070012 'Data type does not match, service parameter too high'**

Cause	Remedy	Severity/response
Incorrect data type, the parameter length is too large.	Check whether the length of the requested index matches the length of the object in the lower-level drive.	Fault

738217542 | 0x2C004E46 **SDO - AbortCode 0x06070013 'Data type does not match, service parameter too low'**

Cause	Remedy	Severity/response
Incorrect data type, the parameter length is too small.	Check whether the length of the requested index matches the length of the object in the lower-level drive.	Fault

738217543 | 0x2C004E47 **SDO - AbortCode 0x06090011 'Subindex does not exist'**

Cause	Remedy	Severity/response
Missing subindex	Check whether the requested index/subindex exists in the lower-level drive.	Fault

738217544 | 0x2C004E48 **SDO - AbortCode 0x06090030 'Write access - Parameter value exceeds limits'**

Cause	Remedy	Severity/response
		Fault

738217545 | 0x2C004E49 **SDO - AbortCode 0x06090031 'Write access - Parameter value too high'**

Cause	Remedy	Severity/response
The value range for parameters is too big.	Check whether the value to be written is within the permitted value range of the object in the lower-level drive.	Fault

738217546 | 0x2C004E4A **SDO - AbortCode 0x06090032 'Write access - Parameter value too low'**

Cause	Remedy	Severity/response
The value range for parameters is too small.	Check whether the value to be written is within the permitted value range of the object in the lower-level drive.	Fault

738217547 | 0x2C004E4B **SDO - AbortCode 0x06090036 'Maximum value less than minimum value'**

Cause	Remedy	Severity/response
The maximum value is smaller than the minimum value.	Check whether the value to be written is within the permitted value range of the object in the lower-level drive.	Fault

738217548 | 0x2C004E4C **SDO - AbortCode 0x08000000 'General error'**

Cause	Remedy	Severity/response
SDO - general error	None	Fault

738217549 | 0x2C004E4D **SDO - AbortCode 0x08000020 'Data cannot be transferred to the application/stored in the application'**

Cause	Remedy	Severity/response
Error when saving/transmitting the data in the application	None	Fault

738217550 | 0x2C004E4E **SDO - AbortCode 0x08000021 'Local control - 'Data cannot be transferred to the application/stored in the application'**

Cause	Remedy	Severity/response
Error caused by manual control when saving/ transmitting the data to the application	Check communication to the lower-level drive.	Fault

738217551 | 0x2C004E4F **SDO - AbortCode 0x08000022 Actual device state - Data cannot be transferred to the application/stored in the application'**

Cause	Remedy	Severity/response
Error caused by current device state when saving/transmitting the data to the application.	Check communication to the lower-level drive.	Fault

738217552 | 0x2C004E50 **SDO - AbortCode 0x08000023 'Object dictionary - Dynamic generation fails or object dictionary is missing'**

Cause	Remedy	Severity/response
The dynamic object directory generation has failed. The object directory is missing.	Check communication to the lower-level drive.	Fault

738217553 | 0x2C004E51 **SDO - AbortCode 0x 'Unknown abort code'**

Cause	Remedy	Severity/response
Unknown abort code	None	Fault

738217805 | 0x2C004F4D **Invalid AxisRef**

Cause	Remedy	Severity/response
No valid axis data structure is connected. The function is not supported by the connected axis.	The function is not supported for the axis used.	Fault

738217806 | 0x2C004F4E **Input "parameter" not used**

Cause	Remedy	Severity/response
The Parameter input is not assigned	Check parameter number of the parameter to be read/written.	Fault

738217807 | 0x2C004F4F **Requested parameter does not exist**

Cause	Remedy	Severity/response
The requested parameter does not exist.	Check parameter number of the parameter to be read/written.	Fault

738217808 | 0x2C004F50 **Invalid state of the axis**

Cause	Remedy	Severity/response
The axis is not in PLCopen state. The action cannot be performed due to the current state.	Check in which state the requested action may be performed.	Fault

738217809 | 0x2C004F51 **Parameter number does not correspond to a Boolean parameter**

Cause	Remedy	Severity/response
The parameter number does not correspond to any Boolean parameter	Check property of the parameter to be read/written. Use the function block MC_ReadParameter/ MC_WriteParameter.	Fault

738217810 | 0x2C004F52 **Positive SW limit exceeded**

Cause	Remedy	Severity/response
The positive software limit position has been exceeded.	Check software limit positions/movement specifications.	Fault

738217811 | 0x2C004F53 **Negative SW limit exceeded**

Cause	Remedy	Severity/response
The negative software limit position has been exceeded.	Check software limit positions/movement specifications.	Fault

738217812 | 0x2C004F54 **Invalid input for source of type MC_Source**

Cause	Remedy	Severity/response
Selection of an invalid source of MC_Source type.	Check entry. Possibly the selected source is not supported by the function block	Fault

738217813 | 0x2C004F55 **No setpoints generated in current PLC cycle**

Cause	Remedy	Severity/response
No setpoints were generated in this cycle, since the function block currently generating the setpoints was not called in this cycle.	Call the function block with the motion-controlling function cyclically in the motion task.	Fault

738217814 | 0x2C004F56 **Controller disabled during operation**

Cause	Remedy	Severity/response
The controller enable of the axis was cancelled during operation.	Check whether STO or a drive error has occurred during motion. Check whether the controller disable has been set by the application.	Fault

738217815 | 0x2C004F57 **Motion prohibited by axis state**

Cause	Remedy	Severity/response
The requested motion cannot be executed due to the current state of the axis.	Establish the initial state required for the requested motion. For example, enable axis, acknowledge error, cancel stop.	Fault

738217816 | 0x2C004F58 **Positive SW limit reached**

Cause	Remedy	Severity/response
The drive is in the positive software limit position.	The drive can only be moved in the negative direction.	Fault

738217817 | 0x2C004F59 **Negative SW limit reached**

Cause	Remedy	Severity/response
The drive is in the negative software limit position.	The drive can only be moved in the positive direction.	Fault

738217818 | 0x2C004F5A **Touch probe - No valid source**

Cause	Remedy	Severity/response
Selection of an invalid touch probe source.	Check parameter setting.	Fault

738217819 | 0x2C004F5B **Touch probe - No valid number**

Cause	Remedy	Severity/response
Selection of an invalid touch probe number.	Check parameter setting.	Fault

738217820 | 0x2C004F5C **Touch Probe - Channel is already in use**

Cause	Remedy	Severity/response
No free touch probe channel The selected touch probe channel is already in use.	Use an unused touch probe channel.	Fault

738217821 | 0x2C004F5D **Touch Probe - Selection not supported**

Cause	Remedy	Severity/response
The selected input does not support touch probe.	Check parameter setting.	Fault

738217822 | 0x2C004F5E **No Touch Probe active**

Cause	Remedy	Severity/response
No touch probe preassigned.	Check parameter setting.	Fault

738217823 | 0x2C004F5F **Input for external TP configuration not connected**

Cause	Remedy	Severity/response
No external touch probe input available.	Check parameter setting.	Fault

738217824 | 0x2C004F60 **Invalid acceleration**

Cause	Remedy	Severity/response
Selection of an invalid acceleration.	Check profile parameters for acceleration.	Fault

738217825 | 0x2C004F61 **Invalid deceleration**

Cause	Remedy	Severity/response
Selection of an invalid deceleration	Check profile parameters for deceleration.	Fault

738217826 | 0x2C004F62 **Invalid velocity**

Cause	Remedy	Severity/response
Selection of an invalid velocity	Check profile parameters for velocity.	Fault

738217827 | 0x2C004F63 **Arithmetic error in profile calculation**

Cause	Remedy	Severity/response
Error in the profile calculation.	Adapt profile parameters.	Fault

738217828 | 0x2C004F64 **Movement cannot be executed with the specified parameters**

Cause	Remedy	Severity/response
The requested motion cannot be executed due to limitations (e.g. software limit positions)	Check direction selection.	Fault

738217829 | 0x2C004F65 **Velocity - Specified value exceeds parameterized maximum value**

Cause	Remedy	Severity/response
The selected velocity exceeds the parameterized maximum value.	Check profile parameters for velocity.	Fault

738217830 | 0x2C004F66 **Acceleration - Specified value exceeds parameterized maximum value**

Cause	Remedy	Severity/response
The selected acceleration exceeds the parameterized maximum value.	Check profile parameters for acceleration.	Fault

738217831 | 0x2C004F67 **Jerk - Specified value exceeds parameterized maximum value**

Cause	Remedy	Severity/response
The selected jerk exceeds the parameterized maximum value.	Check profile parameters for jerk.	Fault

738217832 | 0x2C004F68 **Target position outside SW limits**

Cause	Remedy	Severity/response
The target position is outside the software limit positions.	Check target position. Check distance.	Fault

738217834 | 0x2C004F6A **MoveAbsolute - Invalid acceleration**

Cause	Remedy	Severity/response
Selection of an invalid acceleration.	Check profile parameters for acceleration.	Fault

738217835 | 0x2C004F6B **MoveAbsolute - Invalid deceleration**

Cause	Remedy	Severity/response
Selection of an invalid deceleration	Check profile parameters for deceleration.	Fault

738217836 | 0x2C004F6C **MoveAbsolute - Invalid velocity**

Cause	Remedy	Severity/response
Selection of an invalid velocity	Check profile parameters for velocity.	Fault

738217837 | 0x2C004F6D **MoveAbsolute - Arithmetic error in profile calculation**

Cause	Remedy	Severity/response
Error in the profile calculation.	Adapt profile parameters.	Fault

738217838 | 0x2C004F6E **MoveAbsolute - Movement cannot be executed with the specified parameters**

Cause	Remedy	Severity/response
The requested motion cannot be executed due to limitations (e.g. software limit positions)	Check direction selection.	Fault

738217839 | 0x2C004F6F **MoveAbsolute - Velocity - Specified value exceeds parameterized maximum value**

Cause	Remedy	Severity/response
The selected velocity exceeds the parameterized maximum value.	Check profile parameters for velocity.	Fault

738217840 | 0x2C004F70 **MoveAbsolute - Acceleration - Specified value exceeds parameterized maximum value**

Cause	Remedy	Severity/response
The selected acceleration exceeds the parameterized maximum value.	Check profile parameters for acceleration.	Fault

738217841 | 0x2C004F71 **MoveAbsolute - Jerk - Specified value exceeds parameterized maximum value**

Cause	Remedy	Severity/response
The selected jerk exceeds the parameterized maximum value.	Check profile parameters for jerk.	Fault

738217842 | 0x2C004F72 **MoveAbsolute - Target position outside SW limits**

Cause	Remedy	Severity/response
The target position is outside the software limit positions.	Check target position. Check distance.	Fault

738217844 | 0x2C004F74 **MoveAdditive - Invalid acceleration**

Cause	Remedy	Severity/response
Selection of an invalid acceleration.	Check profile parameters for acceleration.	Fault

738217845 | 0x2C004F75 **MoveAdditive - Invalid deceleration**

Cause	Remedy	Severity/response
Selection of an invalid deceleration	Check profile parameters for deceleration.	Fault

738217846 | 0x2C004F76 **MoveAdditive - Invalid velocity**

Cause	Remedy	Severity/response
Selection of an invalid velocity	Check profile parameters for velocity.	Fault

738217847 | 0x2C004F77 **MoveAdditive - Arithmetic error in profile calculation**

Cause	Remedy	Severity/response
Error in the profile calculation.	Adapt profile parameters.	Fault

738217848 | 0x2C004F78 **MoveAdditive - Movement cannot be executed with the specified parameters**

Cause	Remedy	Severity/response
The requested motion cannot be executed due to limitations (e.g. software limit positions)	Check direction selection.	Fault

738217849 | 0x2C004F79 **MoveAdditive - Velocity - Specified value exceeds parameterized maximum value**

Cause	Remedy	Severity/response
The selected velocity exceeds the parameterized maximum value.	Check profile parameters for velocity.	Fault

738217850 | 0x2C004F7A **MoveAdditive - Acceleration - Specified value exceeds parameterized maximum value**

Cause	Remedy	Severity/response
The selected acceleration exceeds the parameterized maximum value.	Check profile parameters for acceleration.	Fault

738217851 | 0x2C004F7B **MoveAdditive - Jerk - Specified value exceeds parameterized maximum value**

Cause	Remedy	Severity/response
The selected jerk exceeds the parameterized maximum value.	Check profile parameters for jerk.	Fault

738217852 | 0x2C004F7C **MoveAdditive - Target position outside the SW limit**

Cause	Remedy	Severity/response
The target position is outside the software limit positions.	Check target position. Check distance.	Fault

738217854 | 0x2C004F7E **MoveContinuousAbsolute -**

Cause	Remedy	Severity/response
Selection of an invalid acceleration.	Check profile parameters for acceleration.	Fault

738217855 | 0x2C004F7F **MoveContinuousAbsolute - Invalid deceleration**

Cause	Remedy	Severity/response
Selection of an invalid deceleration	Check profile parameters for deceleration.	Fault

738217856 | 0x2C004F80 **MoveContinuousAbsolute - Invalid velocity**

Cause	Remedy	Severity/response
Selection of an invalid velocity	Check profile parameters for velocity.	Fault

738217857 | 0x2C004F81 **MoveContinuousAbsolute - Arithmetic error in profile calculation**

Cause	Remedy	Severity/response
Error in the profile calculation.	Adapt profile parameters.	Fault

738217858 | 0x2C004F82 **MoveContinuousAbsolute - Movement cannot be executed with the specified parameters**

Cause	Remedy	Severity/response
The requested motion cannot be executed due to limitations (e.g. software limit positions)	Check direction selection.	Fault

738217859 | 0x2C004F83 **MoveContinuousAbsolute - Velocity - Specified value exceeds parameterized maximum value**

Cause	Remedy	Severity/response
The selected velocity exceeds the parameterized maximum value.	Check profile parameters for velocity.	Fault

738217860 | 0x2C004F84 **MoveContinuousAbsolute - Acceleration - Specified value exceeds parameterized maximum value**

Cause	Remedy	Severity/response
The selected acceleration exceeds the parameterized maximum value.	Check profile parameters for acceleration.	Fault

738217861 | 0x2C004F85 **MoveContinuousAbsolute - Jerk - Specified value exceeds parameterized maximum value**

Cause	Remedy	Severity/response
The selected jerk exceeds the parameterized maximum value.	Check profile parameters for jerk.	Fault

738217862 | 0x2C004F86 **MoveContinuousAbsolute - Target position outside SW limits**

Cause	Remedy	Severity/response
The target position is outside the software limit positions.	Check target position. Check distance.	Fault

738217864 | 0x2C004F88 **MoveContinuousRelative - Invalid acceleration**

Cause	Remedy	Severity/response
Selection of an invalid acceleration.	Check profile parameters for acceleration.	Fault

738217865 | 0x2C004F89 **MoveContinuousRelative - Invalid deceleration**

Cause	Remedy	Severity/response
Selection of an invalid deceleration	Check profile parameters for deceleration.	Fault

738217866 | 0x2C004F8A **MoveContinuousRelative - Invalid velocity**

Cause	Remedy	Severity/response
Selection of an invalid velocity	Check profile parameters for velocity.	Fault

738217867 | 0x2C004F8B **MoveContinuousRelative - Arithmetic error in profile calculation**

Cause	Remedy	Severity/response
Error in the profile calculation.	Adapt profile parameters.	Fault

738217868 | 0x2C004F8C **MoveContinuousRelative - Movement cannot be executed with the specified parameters**

Cause	Remedy	Severity/response
The requested motion cannot be executed due to limitations (e.g. software limit positions)	Check direction selection.	Fault

738217869 | 0x2C004F8D **MoveContinuousRelative - Velocity - Specified value exceeds parameterized maximum value**

Cause	Remedy	Severity/response
The selected velocity exceeds the parameterized maximum value.	Check profile parameters for velocity.	Fault

738217870 | 0x2C004F8E **MoveContinuousRelative - Acceleration - Specified value exceeds parameterized maximum value**

Cause	Remedy	Severity/response
The selected acceleration exceeds the parameterized maximum value.	Check profile parameters for acceleration.	Fault

738217871 | 0x2C004F8F **MoveContinuousRelative - Jerk - Specified value exceeds parameterized maximum value**

Cause	Remedy	Severity/response
The selected jerk exceeds the parameterized maximum value.	Check profile parameters for jerk.	Fault

738217872 | 0x2C004F90 **MoveContinuousRelative - Target position outside SW limits**

Cause	Remedy	Severity/response
The target position is outside the software limit positions.	Check target position. Check distance.	Fault

738217874 | 0x2C004F92 **MoveRelative - Invalid acceleration**

Cause	Remedy	Severity/response
Selection of an invalid acceleration.	Check profile parameters for acceleration.	Fault

738217875 | 0x2C004F93 **MoveRelative - Invalid deceleration**

Cause	Remedy	Severity/response
Selection of an invalid deceleration	Check profile parameters for deceleration.	Fault

738217876 | 0x2C004F94 **MoveRelative - Invalid velocity**

Cause	Remedy	Severity/response
Selection of an invalid velocity	Check profile parameters for velocity.	Fault

738217877 | 0x2C004F95 **MoveRelative - Arithmetic error in profile calculation**

Cause	Remedy	Severity/response
Error in the profile calculation.	Adapt profile parameters.	Fault

738217878 | 0x2C004F96 **MoveRelative - Movement cannot be executed with the specified parameters**

Cause	Remedy	Severity/response
The requested motion cannot be executed due to limitations (e.g. software limit positions)	Check direction selection.	Fault

738217879 | 0x2C004F97 **MoveRelative - Velocity - Specified value exceeds parameterized maximum value**

Cause	Remedy	Severity/response
The selected velocity exceeds the parameterized maximum value.	Check profile parameters for velocity.	Fault

738217880 | 0x2C004F98 **MoveRelative - Acceleration - Specified value exceeds parameterized maximum value**

Cause	Remedy	Severity/response
The selected acceleration exceeds the parameterized maximum value.	Check profile parameters for acceleration.	Fault

738217881 | 0x2C004F99 **MoveRelative - Jerk - Specified value exceeds parameterized maximum value**

Cause	Remedy	Severity/response
The selected jerk exceeds the parameterized maximum value.	Check profile parameters for jerk.	Fault

738217882 | 0x2C004F9A **MoveRelative - Target position outside SW limits**

Cause	Remedy	Severity/response
The target position is outside the software limit positions.	Check target position. Check distance.	Fault

738217884 | 0x2C004F9C **MoveSuperImposed - Invalid acceleration**

Cause	Remedy	Severity/response
Selection of an invalid acceleration.	Check profile parameters for acceleration.	Fault

738217885 | 0x2C004F9D **MoveSuperImposed - Invalid deceleration**

Cause	Remedy	Severity/response
Selection of an invalid deceleration	Check profile parameters for deceleration.	Fault

738217886 | 0x2C004F9E **MoveSuperImposed - Invalid velocity**

Cause	Remedy	Severity/response
Selection of an invalid velocity	Check profile parameters for velocity.	Fault

738217887 | 0x2C004F9F **MoveSuperImposed - Arithmetic error in profile calculation**

Cause	Remedy	Severity/response
Error in the profile calculation.	Adapt profile parameters.	Fault

738217888 | 0x2C004FA0 **MoveSuperImposed - Movement cannot be executed with the specified parameters**

Cause	Remedy	Severity/response
The requested motion cannot be executed due to limitations (e.g. software limit positions)	Check direction selection.	Fault

738217889 | 0x2C004FA1 **MoveSuperImposed - Velocity - Specified value exceeds parameterized maximum value**

Cause	Remedy	Severity/response
The selected velocity exceeds the parameterized maximum value.	Check profile parameters for velocity.	Fault

738217890 | 0x2C004FA2 **MoveSuperImposed - Acceleration - Specified value exceeds parameterized maximum value**

Cause	Remedy	Severity/response
The selected acceleration exceeds the parameterized maximum value.	Check profile parameters for acceleration.	Fault

738217891 | 0x2C004FA3 **MoveSuperImposed - Jerk - Specified value exceeds parameterized maximum value**

Cause	Remedy	Severity/response
The selected jerk exceeds the parameterized maximum value.	Check profile parameters for jerk.	Fault

738217892 | 0x2C004FA4 **MoveSuperImposed - Target position outside SW limits**

Cause	Remedy	Severity/response
The target position is outside the software limit positions.	Check target position. Check distance.	Fault

738217894 | 0x2C004FA6 **MoveVelocity - Invalid acceleration**

Cause	Remedy	Severity/response
Selection of an invalid acceleration.	Check profile parameters for acceleration.	Fault

738217895 | 0x2C004FA7 **MoveVelocity - Invalid deceleration**

Cause	Remedy	Severity/response
Selection of an invalid deceleration	Check profile parameters for deceleration.	Fault

738217896 | 0x2C004FA8 **MoveVelocity - Invalid velocity**

Cause	Remedy	Severity/response
Selection of an invalid velocity	Check profile parameters for velocity.	Fault

738217897 | 0x2C004FA9 **MoveVelocity - Arithmetic error in profile calculation**

Cause	Remedy	Severity/response
Error in the profile calculation.	Adapt profile parameters.	Fault

738217898 | 0x2C004FAA **MoveVelocity - Movement cannot be executed with the specified parameters**

Cause	Remedy	Severity/response
The requested motion cannot be executed due to limitations (e.g. software limit positions)	Check direction selection.	Fault

738217899 | 0x2C004FAB **MoveVelocity - Velocity - Specified value exceeds parameterized maximum value**

Cause	Remedy	Severity/response
The selected velocity exceeds the parameterized maximum value.	Check profile parameters for velocity.	Fault

738217900 | 0x2C004FAC **MoveVelocity - Acceleration - Specified value exceeds parameterized maximum value**

Cause	Remedy	Severity/response
The selected acceleration exceeds the parameterized maximum value.	Check profile parameters for acceleration.	Fault

738217901 | 0x2C004FAD **MoveVelocity - Jerk - Specified value exceeds parameterized maximum value**

Cause	Remedy	Severity/response
The selected jerk exceeds the parameterized maximum value.	Check profile parameters for jerk.	Fault

738217902 | 0x2C004FAE **MoveVelocity - Target position outside SW limits**

Cause	Remedy	Severity/response
The target position is outside the software limit positions.	Check target position. Check distance.	Fault

738217905 | 0x2C004FB1 **Halt - Invalid deceleration**

Cause	Remedy	Severity/response
Selection of an invalid deceleration	Check profile parameters for deceleration.	Fault

738217907 | 0x2C004FB3 **Halt - Arithmetic error in profile calculation**

Cause	Remedy	Severity/response
Error in the profile calculation.	Adapt profile parameters.	Fault

738217910 | 0x2C004FB6 **Halt - Acceleration - Specified value exceeds parameterized maximum value**

Cause	Remedy	Severity/response
The selected acceleration exceeds the parameterized maximum value.	Check profile parameters for acceleration.	Fault

738217911 | 0x2C004FB7 **Halt - Jerk - Specified value exceeds parameterized maximum value**

Cause	Remedy	Severity/response
The selected jerk exceeds the parameterized maximum value.	Check profile parameters for jerk.	Fault

738217915 | 0x2C004FBB **Stop - Invalid deceleration**

Cause	Remedy	Severity/response
Selection of an invalid deceleration	Check profile parameters for deceleration.	Fault

738217917 | 0x2C004FBD **Stop - Arithmetic error in profile calculation**

Cause	Remedy	Severity/response
Error in the profile calculation.	Adapt profile parameters.	Fault

738217920 | 0x2C004FC0 **Stop - Acceleration - Specified value exceeds parameterized maximum value**

Cause	Remedy	Severity/response
The selected acceleration exceeds the parameterized maximum value.	Check profile parameters for acceleration.	Fault

738217921 | 0x2C004FC1 **Stop - Jerk - Specified value exceeds parameterized maximum value**

Cause	Remedy	Severity/response
The selected jerk exceeds the parameterized maximum value.	Check profile parameters for jerk.	Fault

738217934 | 0x2C004FCE **Invalid direction specified**

Cause	Remedy	Severity/response
Selection of an invalid direction of rotation.	Check setting of the direction selection.	Fault

738217935 | 0x2C004FCF **Invalid buffer mode specified**

Cause	Remedy	Severity/response
Selection of an invalid BufferMode.	Check setting of the BufferMode.	Fault

738217936 | 0x2C004FD0 **Requested direction not enabled**

Cause	Remedy	Severity/response
The inputs EnablePositive or EnableNegative are not set.	Check direction restriction. Assign movement only in the allowed direction.	Fault

738217937 | 0x2C004FD1 **Function cannot be executed due to axis status**

Cause	Remedy	Severity/response
The status of the axis prevents the execution of the function.	None	Fault

738217938 | 0x2C004FD2 **Invalid override value**

Cause	Remedy	Severity/response
Invalid override specifications.	Check value selections for the override. The values must be between 0 and 1.	Fault

738217939 | 0x2C004FD3 **Concurrent MC_Power for one axis**

Cause	Remedy	Severity/response
An attempt was made to enable the axis, although it is already enabled.	Prevent the action from being performed more than once.	Fault

738217940 | 0x2C004FD4 **Concurrent SetQuickstop for one axis**

Cause	Remedy	Severity/response
An attempt was made to activate the quick stop, although it is already active.	Prevent the action from being performed more than once.	Fault

738218003 | 0x2C005013 **Cyclic PDO interface of drive disabled (0x2824)**

Cause	Remedy	Severity/response
The cyclic PDO interface of the drive has been deactivated (0x2824) The drive cannot process setpoints from the application.	Check setting of 0x2824 in the lower-level drive.	Fault

738218004 | 0x2C005014 **Positive HW limit exceeded**

Cause	Remedy	Severity/response
The positive hardware limit position has been exceeded.	Check movement specifications.	Fault

738218005 | 0x2C005015 **Negative HW limit exceeded**

Cause	Remedy	Severity/response
The negative hardware limit position has been exceeded.	Check movement specifications.	Fault

738218006 | 0x2C005016 **Following error - Warning level exceeded**

Cause	Remedy	Severity/response
The warning threshold for the following error has been exceeded.	Check controller settings, encoder parameterization and mechanics.	Fault

738218007 | 0x2C005017 **Following error - Error level exceeded**

Cause	Remedy	Severity/response
The error threshold for the following error has been exceeded.	Check controller settings, encoder parameterization and mechanics.	Fault

738218008 | 0x2C005018 **Communication error to controlled drive**

Cause	Remedy	Severity/response
Communication fault during operation.	Check communication to the lower-level drive. Check EtherCAT.	Fault

738218009 | 0x2C005019 **Initialization error of the axis data**

Cause	Remedy	Severity/response
The initialization of the axis data has failed.	None	Fault

738218010 | 0x2C00501A **Communication time-out to controlled drive**

Cause	Remedy	Severity/response
No communication could be established with the lower-level drive.	Check communication to the lower-level drive. Check EtherCAT. Check the encoder parameters of the lower-level drive. Possibly the encoder could not be initialized.	Fault

738218011 | 0x2C00501B **EtherCAT could not be restarted**

Cause	Remedy	Severity/response
The EtherCAT master could not be reinitialized.	Check EtherCAT device. Analyze error messages of the EtherCAT master in the logbook.	Fault

738218012 | 0x2C00501C **Not ready for re-initialization**

Cause	Remedy	Severity/response
The axis cannot be reinitialized because it is not in the disabled or error stop state.	Disable the controller on all axes before re-initialization is ordered.	Fault

738218013 | 0x2C00501D **Error during initialization**

Cause	Remedy	Severity/response
Error during initialization	None	Fault

738218014 | 0x2C00501E **Axis could not be switched on**

Cause	Remedy	Severity/response
The axis could not be enabled within the parameterized time.	Check lower-level drive if an error is active. Check lower-level drive if STO is active. Check the lower-level drive if the DC-bus voltage is too low.	Fault

738218015 | 0x2C00501F **Drive error**

Cause	Remedy	Severity/response
The drive is in an error state.	Check lower-level drive.	Fault

738218016 | 0x2C005020 **Homing - No homing parameters defined**

Cause	Remedy	Severity/response
There are no parameters defined for homing.	Define parameters.	Fault

738218017 | 0x2C005021 **Homing - Mode not supported by axis**

Cause	Remedy	Severity/response
The selected mode is not supported by the axis.	Select another homing mode.	Fault

738218018 | 0x2C005022 **Homing - Mode unknown**

Cause	Remedy	Severity/response
The selected mode is unknown.	Select another homing mode.	Fault

738218019 | 0x2C005023 **Homing - No external touch probe configuration**

Cause	Remedy	Severity/response
No touch probe parameters are defined	Define parameters.	Fault

738218020 | 0x2C005024 **Homing - Invalid touch probe configuration**

Cause	Remedy	Severity/response
The touch probe parameters are invalid.	Check parameters.	Fault

738218022 | 0x2C005026 **Homing - Error writing parameters to the drive**

Cause	Remedy	Severity/response
Error when writing the parameters for homing to the drive	None	Fault

738218023 | 0x2C005027 **Homing - Error in drive during homing**

Cause	Remedy	Severity/response
Error while homing in the drive.	Check error message.	Fault

738218024 | 0x2C005028 **Homing - Arithmetic error in profile calculation**

Cause	Remedy	Severity/response
Error in the profile calculation.	Adapt profile parameters.	Fault

738218025 | 0x2C005029 **Homing - Torque limits not mapped**

Cause	Remedy	Severity/response
The torque limits have not been mapped.	Add the torque limits 0x60E0 and 0x60E1 to the mapping.	Fault

738218026 | 0x2C00502A **Homing - Invalid velocity or acceleration**

Cause	Remedy	Severity/response
Invalid velocity value or acceleration value.	Check profile parameters.	Fault

738218029 | 0x2C00502D **Reset of drive error failed**

Cause	Remedy	Severity/response
The error in the drive could not be reset.	Eliminate the cause of the error in the lower-level drive.	Fault

738218033 | 0x2C005031 **Position drift during brake test**

Cause	Remedy	Severity/response
Position drift at brake test.	Check the parameterization of the test torque and the permissible position threshold. Check the mechanical holding brake, as it can no longer hold the test torque and slips.	Fault

738218034 | 0x2C005032 **Invalid brake mode**

Cause	Remedy	Severity/response
The selected brake mode is invalid.	Check parameter setting.	Fault

738218035 | 0x2C005033 **Torque pre-control - Time-out**

Cause	Remedy	Severity/response
Feedforward control torque could not be set up.	Check whether the drive can build up the set feedforward control torque. Check whether a torque limitation has been activated by the application.	Fault

738218036 | 0x2C005034 **Invalid brake state**

Cause	Remedy	Severity/response
The brake state is invalid.	Check the setting of the brake mode.	Fault

738218037 | 0x2C005035 **Fast_IO_OUT - Invalid output selected**

Cause	Remedy	Severity/response
Invalid output selected.	Check the setting of the selected output. The connected I/O module does not support this output.	Fault

738218038 | 0x2C005036 **Fast_IO_OUT - Wrong Axis connected**

Cause	Remedy	Severity/response
There is an incorrect axis data structure connected.	Check axis data structure.	Fault

738218039 | 0x2C005037 **Fast_IO_OUT - Wrong Axis parameter**

Cause	Remedy	Severity/response
Faulty axis parameters	The connected encoder axis is not initialized. Check communication.	Fault

738218040 | 0x2C005038 **Fast_IO_OUT - Mapping error**

Cause	Remedy	Severity/response
Internal error	The connected encoder axis is not initialized. Check communication.	Fault

738218041 | 0x2C005039 **Fast_IO_OUT - Internal overflow**

Cause	Remedy	Severity/response
Internal error	Too many switching jobs have been sent to the connected I/O module. Check sources for the control of the I/O module.	Fault

738218042 | 0x2C00503A **Touch probe - Invalid channel selection**

Cause	Remedy	Severity/response
The selected touch probe channel is invalid.	Check whether the selected touch probe configuration is also supported by the lower-level drive.	Fault

738218043 | 0x2C00503B **Touch probe - Invalid mode selection**

Cause	Remedy	Severity/response
The selected touch probe mode is invalid.	Check whether the selected touch probe configuration is also supported by the lower-level drive.	Fault

738218044 | 0x2C00503C **Touch probe - Only positive edge is supported**

Cause	Remedy	Severity/response
The trigger for touch probe may only be the positive edge.	Check touch probe configuration. If "Zero pulse" is selected, the trigger is only possible on a positive edge.	Fault

738218045 | 0x2C00503D **Touch probe - Invalid edge selection**

Cause	Remedy	Severity/response
The selected edge is invalid.	Check touch probe configuration.	Fault

738218046 | 0x2C00503E **Touch probe - Channel in use**

Cause	Remedy	Severity/response
The touch probe channel is already assigned.	Check whether more than one touch probe assignment has taken place on the channel at the same time.	Fault

738218047 | 0x2C00503F **Touch probe - PDO mapping fault**

Cause	Remedy	Severity/response
Mapping error	None	Fault

738218048 | 0x2C005040 **Touch probe - Internal channel in use**

Cause	Remedy	Severity/response
The internal touch probe channel is already assigned.	None	Fault

738218049 | 0x2C005041 **Touch probe - Time-out**

Cause	Remedy	Severity/response
Timeout	None	Fault

738218050 | 0x2C005042 **Touch probe - Communication error**

Cause	Remedy	Severity/response
Communication error	None	Fault

738218051 | 0x2C005043 **Touch probe - Invalid signal selection**

Cause	Remedy	Severity/response
The signal selection is invalid.	Check touch probe configuration.	Fault

738218052 | 0x2C005044 **Touch probe - Wrong axis type**

Cause	Remedy	Severity/response
Wrong axis type	There is an incorrect axis data structure connected.	Fault

738218054 | 0x2C005046 **Touch probe - Rising edge blocked**

Cause	Remedy	Severity/response
The positive edge is disabled.	Check the parameterization of the I/O module. The touch probe edges in the I/O module are not activated.	Fault

738218055 | 0x2C005047 **Touch probe - Falling edge blocked**

Cause	Remedy	Severity/response
The negative edge is disabled.	Check the parameterization of the I/O module. The touch probe edges in the I/O module are not activated.	Fault

738218056 | 0x2C005048 **Touch probe - Internal error**

Cause	Remedy	Severity/response
Internal error	None	Fault

738218104 | 0x2C005078 **Set values greater than the parameterized maximum values**

Cause	Remedy	Severity/response
The generated setpoints exceed the parameterized maximum values.	Check setpoint selections	Fault

738218105 | 0x2C005079 **Set values inconsistent**

Cause	Remedy	Severity/response
The setpoints for position, velocity and acceleration are inconsistent with each other.	None	Fault

738218106 | 0x2C00507A **Position difference per task cycle greater than half the cycle length**

Cause	Remedy	Severity/response
The current position difference per task cycle is greater than half the cycle length. No clear position assignments are possible.	Check cycle length. Reduce setpoint velocity. Increase cycle time of the motion task	Fault

738218107 | 0x2C00507B **Invalid task cycle time**

Cause	Remedy	Severity/response
The task cycle time is invalid. No cyclic motion task has been assigned to the axis.	Assign motion task.	Fault

738218154 | 0x2C0050AA **Initialization - SDO write access failed**

Cause	Remedy	Severity/response
SDO write access failed.	None	Fault

738218155 | 0x2C0050AB **Initialization - SDO read access failed**

Cause	Remedy	Severity/response
SDO read access failed.	None	Fault

738218156 | 0x2C0050AC **Initialization - Cycle time of the fastest task too high**

Cause	Remedy	Severity/response
Cycle time of the fastest task too high.	Reduce the cycle time of the motion task.	Fault

738218157 | 0x2C0050AD **Initialization - Motor rated torque = 0**

Cause	Remedy	Severity/response
The setting of the rated motor torque is invalid.	Check the setting of the rated motor torque. This must not be 0.	Fault

738218158 | 0x2C0050AE **Initialization - Motor rated speed = 0**

Cause	Remedy	Severity/response
The setting of the rated motor speed is invalid.	Check the setting of the rated motor speed. This must not be 0.	Fault

738218159 | 0x2C0050AF **Initialization - Reading of firmware version failed**

Cause	Remedy	Severity/response
The firmware version could not be read.	None	Fault

738218160 | 0x2C0050B0 **Initialization - Invalid Encoder resolution**

Cause	Remedy	Severity/response
The set encoder resolution is invalid.	Check whether the setting is supported by the drive.	Fault

738218161 | 0x2C0050B1 **Initialization - Reading of encoder revolutions failed**

Cause	Remedy	Severity/response
The encoder revolutions could not be read.	None	Fault

738218162 | 0x2C0050B2 **Initialization - Reading of encoder CRC failed**

Cause	Remedy	Severity/response
The encoder CRC could not be read.	None	Fault

738218163 | 0x2C0050B3 **Initialization - Absolute encoder position not available**

Cause	Remedy	Severity/response
The absolute encoder position is not available.	Check parameter setting.	Fault

738218164 | 0x2C0050B4 **Controller firmware incompatible**

Cause	Remedy	Severity/response
The firmware of the controller is not compatible.	Use Lenze Controller.	Fault

738218165 | 0x2C0050B5 **Invalid mode**

Cause	Remedy	Severity/response
The selected mode is invalid.	Check parameter setting.	Fault

738218166 | 0x2C0050B6 **Initialization error at the encoder backplane bus**

Cause	Remedy	Severity/response
Initialization error at encoder backplane bus	Check encoder module.	Fault

738218167 | 0x2C0050B7 **Function 'Optical device identification' not supported**

Cause	Remedy	Severity/response
The 'Optical device detection' function is not supported by the drive.	None	Fault

738218168 | 0x2C0050B8 **Invalid gear factor**

Cause	Remedy	Severity/response
The set gearbox factor is invalid.	Check parameter setting. The value must always be > 0.	Fault

738218169 | 0x2C0050B9 **Position outside cycle length**

Cause	Remedy	Severity/response
The position is outside the cycle length.	Adjust position selection.	Fault

738218170 | 0x2C0050BA **Invalid cycle length (AddOffsetCyclic)**

Cause	Remedy	Severity/response
The set cycle length is invalid.	Check parameter setting.	Fault

738218171 | 0x2C0050BB **Invalid input position (AddOffsetCyclic)**

Cause	Remedy	Severity/response
The input data is invalid.	Adjust position selection.	Fault

738218172 | 0x2C0050BC **Invalid cycle length (ZeroDetect)**

Cause	Remedy	Severity/response
The set cycle length is invalid.	Check parameter setting.	Fault

738218173 | 0x2C0050BD **Invalid input position (ZeroDetect)**

Cause	Remedy	Severity/response
The input data is invalid.	Adjust position selection.	Fault

738218174 | 0x2C0050BE **Invalid start position (IntegrateAxis)**

Cause	Remedy	Severity/response
The starting position is invalid.	Adjust position selection.	Fault

738218175 | 0x2C0050BF **Simultaneous direction setting for 'JogPos' and 'JogNeg'**

Cause	Remedy	Severity/response
For manual jog, the direction selections JogPos and JogNeg are active simultaneously.	Check the direction selection for manual jog.	Fault

738218176 | 0x2C0050C0 **Value outside value range**

Cause	Remedy	Severity/response
The parameter to be written is outside the valid value range.	Check parameter setting.	Fault

738218177 | 0x2C0050C1 **State not 'Disabled'**

Cause	Remedy	Severity/response
The parameter cannot be written as the axis is not in the "Disabled" state	Disable controller so that the parameter can be written.	Fault

738218178 | 0x2C0050C2 **Brake test - Invalid input value**

Cause	Remedy	Severity/response
The values for the brake test are invalid.	Check settings for the brake test.	Fault

738218179 | 0x2C0050C3 **Brake test - Already active**

Cause	Remedy	Severity/response
The brake test is already being performed.	Ensure that the action is not ordered more than once.	Fault

738218180 | 0x2C0050C4 **Brake grind in - Invalid input value**

Cause	Remedy	Severity/response
The values for grinding in the brake are invalid.	Check the settings for grinding in the brake.	Fault

738218181 | 0x2C0050C5 **Brake grind in - Already active**

Cause	Remedy	Severity/response
The grinding of the brake is already carried out.	Ensure that the action is not ordered more than once.	Fault

738218182 | 0x2C0050C6 **Selected control mode not allowed**

Cause	Remedy	Severity/response
The selected control mode is not permissible.	Check selection of the control mode.	Fault

738218183 | 0x2C0050C7 **Virtual axes not supported**

Cause	Remedy	Severity/response
The function cannot be executed with virtual axes and drives in virtual mode.	Do not execute function with a virtual axis.	Fault

738218184 | 0x2C0050C8 **Axis not disabled**

Cause	Remedy	Severity/response
The action cannot be executed because the axis is not in the 'Disabled' state	Disable controller so that the action can be performed.	Fault

738218185 | 0x2C0050C9 **Invalid feed constant**

Cause	Remedy	Severity/response
The selection of the feed constant is invalid.	Check the selection of the feed constant.	Fault

738218186 | 0x2C0050CA **Invalid traversing range**

Cause	Remedy	Severity/response
The selection of the travel range is invalid.	Check selection of the travel range.	Fault

738218187 | 0x2C0050CB **Invalid cycle length**

Cause	Remedy	Severity/response
The selection of the cycle length is invalid.	Check the selection of the cycle length.	Fault

738218188 | 0x2C0050CC **Invalid position resolution**

Cause	Remedy	Severity/response
The selection of the position resolution is invalid.	Check the selection of the position resolution.	Fault

738218189 | 0x2C0050CD **Torque limit too large**

Cause	Remedy	Severity/response
The selected upper torque limit is not supported by the drive.	Check selection of the upper torque limit.	Fault

738218190 | 0x2C0050CE **Torque limit < 0**

Cause	Remedy	Severity/response
The selected lower torque limit is not supported by the drive.	Check selection of the lower torque limit.	Fault

738218191 | 0x2C0050CF **Invalid encoder signal**

Cause	Remedy	Severity/response
The encoder signal is invalid.	Check settings.	Fault

738218192 | 0x2C0050D0 **Encoder signal greater than parameterized measuring range**

Cause	Remedy	Severity/response
The encoder signal is greater than the parameterized total resolution.	Check the setting of the maximum encoder range and adapt it to the encoder used.	Fault

738218193 | 0x2C0050D1 **Invalid parameterized measuring range**

Cause	Remedy	Severity/response
The parameterized total resolution of the encoder is not plausible.	Check the setting of the maximum encoder range and adapt it to the encoder used.	Fault

738218194 | 0x2C0050D2 **STO active in drive**

Cause	Remedy	Severity/response
The axis cannot be enabled because STO is active.	Deactivate STO.	Fault

738218195 | 0x2C0050D3 **Inverter disable active**

Cause	Remedy	Severity/response
The axis cannot be enabled because the controller disable is active via the terminal.	Enable axis via terminal.	Fault

738218196 | 0x2C0050D4 **Invalid SW limits**

Cause	Remedy	Severity/response
The specified software limit positions are invalid or reversed.	Check parameter setting.	Fault

738218197 | 0x2C0050D5 **Invalid jerk**

Cause	Remedy	Severity/response
The set jerk is invalid.	Check parameter setting.	Fault

738218198 | 0x2C0050D6 **Parameter 'vl Target Velocity' not included in mapping**

Cause	Remedy	Severity/response
Parameter 0x60FF is not included in the mapping. But it is needed for the control of the velocity mode (vl).	Add 0x60FF in the mapping.	Fault

738218199 | 0x2C0050D7 **Parameter 'vl Actual Velocity' not included in mapping**

Cause	Remedy	Severity/response
Parameter 0x6044 is not included in the mapping. But it is needed for the control of the velocity mode (vl).	Add 0x6044 in the mapping.	Fault

738218200 | 0x2C0050D8 **Axis not homed**

Cause	Remedy	Severity/response
For the axis, no home position is known.	Execute homing.	Fault

738218201 | 0x2C0050D9 **Axis not in SimpleMode**

Cause	Remedy	Severity/response
The function is not supported because the axis is not in single mode.	Check parameter setting.	Fault

738218202 | 0x2C0050DA **Axis in SimpleMode**

Cause	Remedy	Severity/response
The function is not supported because the axis is in single mode.	Check parameter setting.	Fault

738218203 | 0x2C0050DB **Function not supported by axis**

Cause	Remedy	Severity/response
The function is not supported by the connected axis type.	None	Fault

738218204 | 0x2C0050DC **Execution index already in use**

Cause	Remedy	Severity/response
The specified eExecutionIndex is already in use at another setpoint manipulator	A maximum of three setpoint manipulators can be hooked into an AxisRef at the same time. The instances must each be registered on a free ExecutionIndex.	Fault

738218205 | 0x2C0050DD **SS1 active**

Cause	Remedy	Severity/response
Safe stop 1 (SS1) active. The requested movement cannot be executed.	None	Fault

738218206 | 0x2C0050DE **SS2 active**

Cause	Remedy	Severity/response
Safe stop 2 (SS2) active. The requested movement cannot be executed.	None	Fault

738218207 | 0x2C0050DF **Velocity limited by SLS1**

Cause	Remedy	Severity/response
Profile velocity limited by SLS1	None	Fault

738218208 | 0x2C0050E0 **Velocity limited by SLS2**

Cause	Remedy	Severity/response
Profile velocity limited by SLS2	None	Fault

738218209 | 0x2C0050E1 **Velocity limited by SLS3**

Cause	Remedy	Severity/response
Profile velocity limited by SLS3	None	Fault

738218210 | 0x2C0050E2 **Velocity limited by SLS4**

Cause	Remedy	Severity/response
Profile velocity limited by SLS4	None	Fault

738218211 | 0x2C0050E3 **Invalid execution index**

Cause	Remedy	Severity/response
eExecutionIndex is assigned a value outside the allowed value range.	None	Fault

738218253 | 0x2C00510D **The total number of manageable axes in the project has been reached**

Cause	Remedy	Severity/response
		Fault

738218306 | 0x2C005142 **Actual position of the load encoder not included in the mapping**

Cause	Remedy	Severity/response
		Fault

738218307 | 0x2C005143 **Function not supported by drive**

Cause	Remedy	Severity/response
		Fault

738218308 | 0x2C005144 **Autotuning with variable switching frequency**

Cause	Remedy	Severity/response
		Fault

738218309 | 0x2C005145 **A test mode is already active in the drive**

Cause	Remedy	Severity/response
		Fault

738218310 | 0x2C005146 **Function "Set position" is not allowed because home position is set permanently**

Cause	Remedy	Severity/response
		Fault

738218894 | 0x2C00538E **Blending of cartesian motion with MoveDirect is not supported**

Cause	Remedy	Severity/response
		Fault

738218895 | 0x2C00538F **Blending of L_MC4P_GroupWaitTime is not supported**

Cause	Remedy	Severity/response
		Fault

738218896 | 0x2C005390 **Auxilliary axes with mode DiscreteAbs/DiscreteRel cannot be blended**

Cause	Remedy	Severity/response
		Fault

738218897 | 0x2C005391 **Blending not possible without predecessor motion**

Cause	Remedy	Severity/response
		Fault

738218898 | 0x2C005392 **Blending not possible due to delayed request**

Cause	Remedy	Severity/response
		Fault

738218899 | 0x2C005393 **LookAhead = 0, blending not possible**

Cause	Remedy	Severity/response
		Fault

738218900 | 0x2C005394 **Abort of 'PathRefFromFile' during the execution of 'MovePath'**

Cause	Remedy	Severity/response
		Fault

738219504 | 0x2C0055F0 **Phasing not allowed**

Cause	Remedy	Severity/response
Phasing cannot be executed as a phase offset to another master axis already exists.	Check master/slave axis assignment.	Fault

738219514 | 0x2C0055FA **Invalid CamRef**

Cause	Remedy	Severity/response
The CamRef is invalid.	Check the interconnection of the cam data.	Fault

738219515 | 0x2C0055FB **Invalid cam type**

Cause	Remedy	Severity/response
The cam type is invalid.	Check the interconnection of the cam data.	Fault

738219516 | 0x2C0055FC **Invalid cam data**

Cause	Remedy	Severity/response
The cam data is invalid.	Check the interconnection of the cam data.	Fault

738219517 | 0x2C0055FD **Invalid number of memory segments**

Cause	Remedy	Severity/response
The number of memory segments is invalid.	Check the number of memory segments.	Fault

738219518 | 0x2C0055FE **Insufficient memory segments defined for cam**

Cause	Remedy	Severity/response
The specified number of memory segments is too small for the cam to be loaded.	Adapt number of memory segments to the cam.	Fault

738219519 | 0x2C0055FF **Invalid law of motion**

Cause	Remedy	Severity/response
The law of motion is invalid.	Check the definition of the cam.	Fault

738219520 | 0x2C005600 **Invalid input data**

Cause	Remedy	Severity/response
The input data is invalid.	None	Fault

738219529 | 0x2C005609 **Master out of cam**

Cause	Remedy	Severity/response
The master axis is beyond the valid cam range	Check the definition of the cam.	Fault

738219530 | 0x2C00560A **OffsetScaling - Invalid velocity/acceleration**

Cause	Remedy	Severity/response
The velocity of the Offset/Scaling function is too low.	Check selection of the acceleration.	Fault

738219531 | 0x2C00560B **Invalid cam table**

Cause	Remedy	Severity/response
The cam is invalid.	Check the interconnection of the cam data.	Fault

738219532 | 0x2C00560C **Invalid start or end position of cam**

Cause	Remedy	Severity/response
The start value and the end value of the cam are invalid.	Check the definition of the cam.	Fault

738219533 | 0x2C00560D **Invalid scaling factor**

Cause	Remedy	Severity/response
The scaling factor is invalid.	Check scaling factor.	Fault

738219534 | 0x2C00560E **Clutch in error**

Cause	Remedy	Severity/response
Error when coupling	Check coupling adjustment.	Fault

738219539 | 0x2C005613 **Not allowed movement by master**

Cause	Remedy	Severity/response
The master must not be moved while coupling.	Stop the master. Use a different coupling mode.	Fault

738219540 | 0x2C005614 **Clutch needs reversing**

Cause	Remedy	Severity/response
The coupling must be reversed.	Check coupling adjustment.	Fault

738219541 | 0x2C005615 **Invalid default jerk**

Cause	Remedy	Severity/response
The standard jerk is invalid.	Check parameter setting.	Fault

738219542 | 0x2C005616 **Invalid open instant deceleration**

Cause	Remedy	Severity/response
The deceleration set for instant opening is invalid.	Check parameter setting.	Fault

738219543 | 0x2C005617 **Invalid reversing**

Cause	Remedy	Severity/response
Reversing may occur in the coupling phase.	Check coupling adjustment.	Fault

738219554 | 0x2C005622 **File not found**

Cause	Remedy	Severity/response
The cam file was not found.	Check the file name of the cam. Check cam track.	Fault

738219555 | 0x2C005623 **Invalid file**

Cause	Remedy	Severity/response
The cam file has an invalid format.	Create new cam file	Fault

738219556 | 0x2C005624 **Invalid checksum**

Cause	Remedy	Severity/response
The curve file has an invalid checksum.	Create new cam file	Fault

738219557 | 0x2C005625 **Invalid data size**

Cause	Remedy	Severity/response
The cam file has an invalid file size.	Create new cam file	Fault

738219564 | 0x2C00562C **Invalid TappetRef**

Cause	Remedy	Severity/response
The TappetRef is invalid.	Check the definition of the cam track.	Fault

738219565 | 0x2C00562D **Invalid tappet data**

Cause	Remedy	Severity/response
The cam data is invalid.	Check the definition of the cam track.	Fault

738219566 | 0x2C00562E **Invalid tappet type**

Cause	Remedy	Severity/response
The cam type is invalid.	Check the definition of the cam track.	Fault

738219567 | 0x2C00562F **Invalid tappet switching time**

Cause	Remedy	Severity/response
The cam switching time is invalid.	Check the definition of the cam track.	Fault

738219568 | 0x2C005630 **Invalid tappet position**

Cause	Remedy	Severity/response
The cam position is invalid.	Check the definition of the cam track.	Fault

738219569 | 0x2C005631 **Dynamic tappet sampling error**

Cause	Remedy	Severity/response
Cam dynamization error	Adjust setting for dynamization.	Fault

738219586 | 0x2C005642 **LinearCoupling - Invalid X cycle length**

Cause	Remedy	Severity/response
The X-cycle length is invalid.	Check cycle length setting	Fault

738219587 | 0x2C005643 **LinearCoupling - Invalid Y cycle length**

Cause	Remedy	Severity/response
The X-cycle length is invalid.	Check cycle length setting	Fault

738219588 | 0x2C005644 **LinearCoupling - Invalid input position**

Cause	Remedy	Severity/response
The input data is invalid.	Check input position.	Fault

738219589 | 0x2C005645 **Invalid number of tappets**

Cause	Remedy	Severity/response
The number of cams in invalid.	Check the definition of the cam track.	Fault

805306384 | 0x30000010 **Internal error**

Cause	Remedy	Severity/response
Internal error	Restart the device. If the error persists, contact the manufacturer.	Warning

805306385 | 0x30000011 **Internal error**

Cause	Remedy	Severity/response
Internal error	Restart the device. If the error persists, contact the manufacturer.	Warning

805306386 | 0x30000012 **Internal error**

Cause	Remedy	Severity/response
Internal error	Restart the device. If the error persists, contact the manufacturer.	Warning

805306387 | 0x30000013 **Internal error**

Cause	Remedy	Severity/response
Internal error	Restart the device. If the error persists, contact the manufacturer.	Warning

805306570 | 0x300000CA **Internal error**

Cause	Remedy	Severity/response
Internal error	Restart the device. If the error persists, contact the manufacturer.	Warning

805306571 | 0x300000CB **Internal error**

Cause	Remedy	Severity/response
Internal error	Restart the device. If the error persists, contact the manufacturer.	Warning

805311368 | 0x30001388 **Internal error**

Cause	Remedy	Severity/response
Internal error	Restart the device. If the error persists, contact the manufacturer.	Warning

805311369 | 0x30001389 **CTRL - Feature not supported**

Cause	Remedy	Severity/response
Internal error	Restart the device. If the error persists, contact the manufacturer.	Warning

805311370 | 0x3000138A **CTRL - Invalid index**

Cause	Remedy	Severity/response
Internal error	Restart the device. If the error persists, contact the manufacturer.	Warning

805311371 | 0x3000138B **ISW - Invalid offset**

Cause	Remedy	Severity/response
Internal error	Restart the device. If the error persists, contact the manufacturer.	Warning

805311373 | 0x3000138D **CTRL - Invalid size**

Cause	Remedy	Severity/response
Internal error	Restart the device. If the error persists, contact the manufacturer.	Warning

805311374 | 0x3000138E **ISW - Invalid data**

Cause	Remedy	Severity/response
Internal error	Restart the device. If the error persists, contact the manufacturer.	Warning

805311375 | 0x3000138F **ISW - Not ready**

Cause	Remedy	Severity/response
Internal error	Restart the device. If the error persists, contact the manufacturer.	Warning

805311376 | 0x30001390 **CTRL - Busy**

Cause	Remedy	Severity/response
Internal error	Restart the device. If the error persists, contact the manufacturer.	Warning

805311377 | 0x30001391 **ISW - Cannot queue acyclic EtherCAT command**

Cause	Remedy	Severity/response
Internal error	Restart the device. If the error persists, contact the manufacturer.	Warning

805311378 | 0x30001392 **CFG - No memory left**

Cause	Remedy	Severity/response
Internal error	Restart the device. If the error persists, contact the manufacturer.	Warning

805311379 | 0x30001393 **CTRL - Invalid parameter**

Cause	Remedy	Severity/response
Internal error	Restart the device. If the error persists, contact the manufacturer.	Warning

805311380 | 0x30001394 **CTRL - Not found**

Cause	Remedy	Severity/response
Internal error	Restart the device. If the error persists, contact the manufacturer.	Warning

805311382 | 0x30001396 **ISW - Invalid state**

Cause	Remedy	Severity/response
Internal error	Restart the device. If the error persists, contact the manufacturer.	Warning

805311383 | 0x30001397 **ISW - Cannot add slave to timer list**

Cause	Remedy	Severity/response
Internal error	Restart the device. If the error persists, contact the manufacturer.	Warning

805311384 | 0x30001398 **SLV - Time-out**

Cause	Remedy	Severity/response
Internal error	Restart the device. If the error persists, contact the manufacturer.	Warning

805311385 | 0x30001399 **ISW - Open failed**

Cause	Remedy	Severity/response
Internal error	Restart the device. If the error persists, contact the manufacturer.	Warning

805311386 | 0x3000139A **LLA - Send failed**

Cause	Remedy	Severity/response
Internal error	Restart the device. If the error persists, contact the manufacturer.	Warning

805311387 | 0x3000139B **CFG - Error when queuing a mailbox command**

Cause	Remedy	Severity/response
Internal error	Restart the device. If the error persists, contact the manufacturer.	Warning

805311388 | 0x3000139C **ISW - Invalid mailbox command**

Cause	Remedy	Severity/response
Internal error	Restart the device. If the error persists, contact the manufacturer.	Warning

805311389 | 0x3000139D **ISW - Unknown mailbox protocol command**

Cause	Remedy	Severity/response
Internal error	Restart the device. If the error persists, contact the manufacturer.	Warning

805311390 | 0x3000139E **ISW - Access denied**

Cause	Remedy	Severity/response
Internal error	Restart the device. If the error persists, contact the manufacturer.	Warning

805311394 | 0x300013A2 **CFG - Invalid product key**

Cause	Remedy	Severity/response
Internal error	Restart the device. If the error persists, contact the manufacturer.	Warning

805311395 | 0x300013A3 **PRJ - Wrong format of master XML file**

Cause	Remedy	Severity/response
Internal error	Restart the device. If the error persists, contact the manufacturer.	Warning

805311396 | 0x300013A4 **CTRL - Function disabled**

Cause	Remedy	Severity/response
Internal error	Restart the device. If the error persists, contact the manufacturer.	Warning

805311398 | 0x300013A6 **PRJ - Mismatch of bus configuration and number of connected slaves**

Cause	Remedy	Severity/response
Internal error	Restart the device. If the error persists, contact the manufacturer.	Warning

805311399 | 0x300013A7 **PRJ - Error reading master XML file**

Cause	Remedy	Severity/response
Internal error	Restart the device. If the error persists, contact the manufacturer.	Warning

805311401 | 0x300013A9 **PRJ - Configurator error - cyclic commands are missing in master XML file**

Cause	Remedy	Severity/response
Internal error	Restart the device. If the error persists, contact the manufacturer.	Warning

805311402 | 0x300013AA **PRJ - AL_STATUS register read command is missing in master XML file**

Cause	Remedy	Severity/response
Internal error	Restart the device. If the error persists, contact the manufacturer.	Warning

805311403 | 0x300013AB **ISW - Fatal internal McSm error**

Cause	Remedy	Severity/response
Internal error	Restart the device. If the error persists, contact the manufacturer.	Warning

805311404 | 0x300013AC **SLV - Slave error**

Cause	Remedy	Severity/response
Internal error	Restart the device. If the error persists, contact the manufacturer.	Warning

805311405 | 0x300013AD **SLV - Frame lost, IDX mismatch**

Cause	Remedy	Severity/response
Internal error	Restart the device. If the error persists, contact the manufacturer.	Warning

805311406 | 0x300013AE **SLV - At least one EtherCAT command is missing in the received frame**

Cause	Remedy	Severity/response
Internal error	Restart the device. If the error persists, contact the manufacturer.	Warning

805311408 | 0x300013B0 **CTRL - IOCTL EC_IOCTL_DC_LATCH_REQ_LTIMVALS not possible in DC Latching auto read mode**

Cause	Remedy	Severity/response
Internal error	Restart the device. If the error persists, contact the manufacturer.	Warning

805311409 | 0x300013B1 **SLV - Auto increment address - increment mismatch (slave missing)**

Cause	Remedy	Severity/response
Internal error	Restart the device. If the error persists, contact the manufacturer.	Warning

805311410 | 0x300013B2 **CTRL - Slave in invalid state, e.g. not in OP (API not callable in this state)**

Cause	Remedy	Severity/response
Internal error	Restart the device. If the error persists, contact the manufacturer.	Warning

805311411 | 0x300013B3 **SLV - Fixed station address lost or slave missing - FPRD to AL_STATUS failed**

Cause	Remedy	Severity/response
Internal error	Restart the device. If the error persists, contact the manufacturer.	Warning

805311412 | 0x300013B4 **PRJ - Too many cyclic commands in XML configuration file**

Cause	Remedy	Severity/response
Internal error	Restart the device. If the error persists, contact the manufacturer.	Warning

805311414 | 0x300013B6 **RAP - Master core not accessible**

Cause	Remedy	Severity/response
Internal error	Restart the device. If the error persists, contact the manufacturer.	Warning

805311415 | 0x300013B7 **SLV - COE mailbox send - WKC error**

Cause	Remedy	Severity/response
Internal error	Restart the device. If the error persists, contact the manufacturer.	Warning

805311416 | 0x300013B8 **SLV - COE mailbox receive - WKC error**

Cause	Remedy	Severity/response
Internal error	Restart the device. If the error persists, contact the manufacturer.	Warning

805311417 | 0x300013B9 **CTRL - No mailbox support**

Cause	Remedy	Severity/response
Internal error	Restart the device. If the error persists, contact the manufacturer.	Warning

805311418 | 0x300013BA **CoE - Protocol not supported**

Cause	Remedy	Severity/response
Slave does not support CoE.	Use slave that supports CoE.	Warning

805311419 | 0x300013BB **PRJ - EoE protocol not supported**

Cause	Remedy	Severity/response
Slave does not support EoE.	Use slave that supports EoE.	Warning

805311420 | 0x300013BC **FoE . Protocol not supported**

Cause	Remedy	Severity/response
Slave does not support FoE.	Use slave that supports FoE.	Warning

805311421 | 0x300013BD **PRJ - SoE protocol not supported**

Cause	Remedy	Severity/response
Slave does not support SoE.	Use slave that supports SoE.	Warning

805311422 | 0x300013BE **PRJ - VoE protocol not supported**

Cause	Remedy	Severity/response
Slave does not support VoE.	Use slave that supports VoE.	Warning

805311423 | 0x300013BF **PRJ - Configuration violates evaluation limits**

Cause	Remedy	Severity/response
		Warning

805311424 | 0x300013C0 **CFG - Evaluation time expired**

Cause	Remedy	Severity/response
		Warning

805311431 | 0x300013C7 **COE - invalid slave state**

Cause	Remedy	Severity/response
The slave status is invalid.	Check if slave is at least PreOperational. Check other access rights.	Warning

805311432 | 0x300013C8 **CoE - SDO Abort 'Toggle bit not alternated (0x05030000)'**

Cause	Remedy	Severity/response
Internal error	Restart the device. If the error persists, contact the manufacturer.	Warning

805311433 | 0x300013C9 **CoE - SDO Abort 'SDO protocol time-out (0x05040000)'**

Cause	Remedy	Severity/response
SDO protocol timeout	Check if timeout is set too low.	Warning

805311434 | 0x300013CA **CoE - SDO Abort 'Client/server command specifier not valid or unknown (0x05040001)'**

Cause	Remedy	Severity/response
Internal error	Restart the device. If the error persists, contact the manufacturer.	Warning

805311435 | 0x300013CB **CoE - SDO Abort 'Invalid block size (block mode only) (0x05040002)'**

Cause	Remedy	Severity/response
Internal error	Restart the device. If the error persists, contact the manufacturer.	Warning

805311436 | 0x300013CC **CoE - SDO Abort 'Invalid sequence number (block mode only) (0x05040003)'**

Cause	Remedy	Severity/response
Internal error	Restart the device. If the error persists, contact the manufacturer.	Warning

805311437 | 0x300013CD **CoE - SDO Abort 'CRC error (block mode only) (0x05040004)'**

Cause	Remedy	Severity/response
Internal error	Restart the device. If the error persists, contact the manufacturer.	Warning

805311438 | 0x300013CE **CoE - SDO Abort 'Out of memory (0x05040005)'**

Cause	Remedy	Severity/response
Internal error	Restart the device. If the error persists, contact the manufacturer.	Warning

805311439 | 0x300013CF **CoE - SDO Abort 'Unsupported access to an object (0x06010000)'**

Cause	Remedy	Severity/response
Access denied.	Check access authorization.	Warning

805311440 | 0x300013D0 **CoE - SDO Abort 'Attempt to read a write only object (0x06010001)'**

Cause	Remedy	Severity/response
Access denied.	Check access authorization.	Warning

805311441 | 0x300013D1 **CoE - SDO Abort 'Attempt to write a read only object (0x06010002)'**

Cause	Remedy	Severity/response
Access denied.	Check access authorization.	Warning

805311442 | 0x300013D2 **CoE - SDO-Abort 'Object does not exist in the object dictionary (0x06020000)'**

Cause	Remedy	Severity/response
Access denied.	Check access authorization. Check if object exists.	Warning

805311443 | 0x300013D3 **CoE - SDO Abort 'Object cannot be mapped to the PDO (0x06040041)'**

Cause	Remedy	Severity/response
Access denied.	Check access authorization. Check if object exists.	Warning

805311444 | 0x300013D4 **CoE - SDO Abort 'Number and length of objects to be mapped exceed PDO length (0x06040042)'**

Cause	Remedy	Severity/response
Access denied.	Check the length of the objects to be mapped.	Warning

805311445 | 0x300013D5 **CoE - SDO Abort 'General parameter incompatibility (0x06040043)'**

Cause	Remedy	Severity/response
Access denied.	Check access authorization.	Warning

805311446 | 0x300013D6 **CoE - SDO Abort 'General internal incompatibility in the device (0x06040047)'**

Cause	Remedy	Severity/response
Access denied.	Check access authorization.	Warning

805311447 | 0x300013D7 **CoE - SDO Abort 'Access failed due to an hardware error (0x06060000)'**

Cause	Remedy	Severity/response
Access denied.	Check access authorization. Check object properties.	Warning

805311448 | 0x300013D8 **CoE - SDO Abort 'Data type or length of service parameters do not match (0x06070010)'**

Cause	Remedy	Severity/response
Access denied.	Check access authorization. Check object properties.	Warning

805311449 | 0x300013D9 **CoE - SDO Abort 'Data type does not match, service parameter too high (0x06070012)'**

Cause	Remedy	Severity/response
Access denied.	Check access authorization. Check object properties.	Warning

805311450 | 0x300013DA **CoE - SDO Abort 'Data type does not match, service parameter too low (0x06070013)'**

Cause	Remedy	Severity/response
Access denied.	Check access authorization. Check object properties.	Warning

805311451 | 0x300013DB **CoE - SDO Abort 'Subindex does not exist (0x06090011)'**

Cause	Remedy	Severity/response
Access denied.	Check access authorization. Check object properties.	Warning

805311452 | 0x300013DC **CoE - SDO Abort 'Write access - Parameter value exceeds limits (0x06090030)'**

Cause	Remedy	Severity/response
Access denied.	Check access authorization. Check object properties.	Warning

805311453 | 0x300013DD **CoE - SDO Abort 'Write access - Parameter value too high (0x06090031)'**

Cause	Remedy	Severity/response
Access denied.	Check access authorization. Check object properties.	Warning

805311454 | 0x300013DE **CoE - SDO Abort 'Write access - Parameter value too low (0x06090032)'**

Cause	Remedy	Severity/response
Access denied.	Check access authorization. Check object properties.	Warning

805311455 | 0x300013DF **CoE - SDO Abort 'Maximum value less than minimum value (0x06090036)'**

Cause	Remedy	Severity/response
Access denied.	Check access authorization. Check object properties.	Warning

805311456 | 0x300013E0 **CoE - SDO Abort 'General error (0x08000000)'**

Cause	Remedy	Severity/response
Access denied.	Check access authorization. Check object properties.	Warning

805311457 | 0x300013E1 **CoE - SDO Abort 'Data cannot be transferred/stored in application (0x08000020)'**

Cause	Remedy	Severity/response
Access denied.	Check access authorization. Check object properties.	Warning

805311458 | 0x300013E2 **CoE - SDO Abort 'Local control - Data cannot be transferred/stored in application (0x08000021)'**

Cause	Remedy	Severity/response
Access denied.	Check access authorization. Check object properties.	Warning

805311459 | 0x300013E3 **CoE- SDO Abort 'Actual device state - Data cannot be transferred/stored in application (0x08000022)'**

Cause	Remedy	Severity/response
Access denied.	Check access authorization. Check object properties.	Warning

805311460 | 0x300013E4 **CoE - SDO Abort 'Object dictionary - Dynamic generation fails or object dictionary is missing (0x08000023)'**

Cause	Remedy	Severity/response
Access denied.	Check access authorization. Check object properties.	Warning

805311461 | 0x300013E5 **CoE - SDO Abort 'Unknown abort code'**

Cause	Remedy	Severity/response
Access denied.	Check access authorization. Check object properties.	Warning

805311462 | 0x300013E6 **CoE - Invalid parameter**

Cause	Remedy	Severity/response
Access denied.	Check access authorization. Check object properties. Check transfer properties.	Warning

805311463 | 0x300013E7 **CoE - CoE protocol not supported**

Cause	Remedy	Severity/response
Access denied.	Check access authorization. Check object properties. Check transfer properties.	Warning

805311464 | 0x300013E8 **CoE - Unknown FoE error**

Cause	Remedy	Severity/response
Access denied.	Check access authorization. Check file. Check transfer properties.	Warning

805311465 | 0x300013E9 **CoE - FoE error 'Not found'**

Cause	Remedy	Severity/response
Access denied.	Check access authorization. Check file. Check transfer properties.	Warning

805311466 | 0x300013EA **CoE - FoE error 'Access denied'**

Cause	Remedy	Severity/response
Access denied.	Check access authorization. Check file. Check transfer properties.	Warning

805311467 | 0x300013EB **CoE - FoE error 'Disk full'**

Cause	Remedy	Severity/response
Access denied.	Check access authorization. Check file. Check transfer properties.	Warning

805311468 | 0x300013EC **CoE - FoE error 'Illegal'**

Cause	Remedy	Severity/response
Access denied.	Check access authorization. Check file. Check transfer properties.	Warning

805311469 | 0x300013ED **CoE - FoE error 'Wrong packet number'**

Cause	Remedy	Severity/response
Internal error	Restart the device. If the error persists, contact the manufacturer.	Warning

805311470 | 0x300013EE **CoE - FoE error 'Already existing'**

Cause	Remedy	Severity/response
Access denied.	Check access authorization. Check file. Check transfer properties.	Warning

805311471 | 0x300013EF **CoE - FoE error 'User missing'**

Cause	Remedy	Severity/response
Access denied.	Check access authorization. Check file. Check transfer properties.	Warning

805311472 | 0x300013F0 **CoE - FoE error 'Only possible in bootstrap'**

Cause	Remedy	Severity/response
Access denied.	Check access authorization. Check file. Check transfer properties.	Warning

805311473 | 0x300013F1 **CoE - FoE error 'No bootstrap'**

Cause	Remedy	Severity/response
Access denied.	Check access authorization. Check file. Check transfer properties.	Warning

805311474 | 0x300013F2 **CoE - FoE error 'No access rights'**

Cause	Remedy	Severity/response
Access denied.	Check access authorization. Check file. Check transfer properties.	Warning

805311475 | 0x300013F3 **CoE - FoE error 'Program error'**

Cause	Remedy	Severity/response
Access denied.	Check access authorization. Check object properties.	Warning

805311476 | 0x300013F4 **CoE - FoE error 'Invalid parameter'**

Cause	Remedy	Severity/response
Access denied.	Check access authorization. Check file. Check transfer properties.	Warning

805311480 | 0x300013F8 **CTRL - Master configuration not found**

Cause	Remedy	Severity/response
Internal error	Restart the device. If the error persists, contact the manufacturer.	Warning

805311481 | 0x300013F9 **SLV - Command error while EEPROM upload**

Cause	Remedy	Severity/response
Internal error	Restart the device. If the error persists, contact the manufacturer.	Warning

805311482 | 0x300013FA **SLV - Command error while EEPROM download**

Cause	Remedy	Severity/response
Internal error	Restart the device. If the error persists, contact the manufacturer.	Warning

805311483 | 0x300013FB **PRJ - Cyclic command too long**

Cause	Remedy	Severity/response
Internal error	Restart the device. If the error persists, contact the manufacturer.	Warning

805311484 | 0x300013FC **PRJ - Invalid input offset in cyc cmd, please check InputOffs**

Cause	Remedy	Severity/response
Internal error	Restart the device. If the error persists, contact the manufacturer.	Warning

805311485 | 0x300013FD **PRJ - Invalid output offset in cyc cmd, please check OutputOffs**

Cause	Remedy	Severity/response
Internal error	Restart the device. If the error persists, contact the manufacturer.	Warning

805311753 | 0x30001509 **RAP - Invalid cookie**

Cause	Remedy	Severity/response
		Warning

805311754 | 0x3000150A **RAP - Watchdog expired**

Cause	Remedy	Severity/response
		Warning

805311755 | 0x3000150B **RAP - Connecting 2nd server denied, multi server support is disabled**

Cause	Remedy	Severity/response
		Warning

805311756 | 0x3000150C **RAP - Logon aborted**

Cause	Remedy	Severity/response
		Warning

805311757 | 0x3000150D **RAP - Invalid version**

Cause	Remedy	Severity/response
		Warning

805311769 | 0x30001519 **RAP - Server stopped**

Cause	Remedy	Severity/response
		Warning

805311770 | 0x3000151A **RAP - Watchdog expired**

Cause	Remedy	Severity/response
		Warning

805311771 | 0x3000151B **RAP - Reconnect time expired**

Cause	Remedy	Severity/response
		Warning

805311772 | 0x3000151C **RAP - Client logged on**

Cause	Remedy	Severity/response
		Warning

805311773 | 0x3000151D **RAP - Client reconnected**

Cause	Remedy	Severity/response
		Warning

805311774 | 0x3000151E **RAP - Socket changed after reconnect**

Cause	Remedy	Severity/response
		Warning

805311817 | 0x30001549 **DCM - Init function not called or call not successful**

Cause	Remedy	Severity/response
		Warning

805311818 | 0x3000154A **DCM - Controller error - synchronization out of limit**

Cause	Remedy	Severity/response
		Warning

805311819 | 0x3000154B **DCM - Not enough memory**

Cause	Remedy	Severity/response
		Warning

805311820 | 0x3000154C **DCM - Hardware layer - (BSP) invalid**

Cause	Remedy	Severity/response
		Warning

805311821 | 0x3000154D **DCM - Hardware layer - Error while modifying the timer**

Cause	Remedy	Severity/response
		Warning

805311822 | 0x3000154E **DCM - Hardware layer - Timer is not running**

Cause	Remedy	Severity/response
		Warning

805311823 | 0x3000154F **DCM - Hardware layer - Function is called on wrong CPU**

Cause	Remedy	Severity/response
		Warning

805311881 | 0x30001589 **EtherCAT - State change of master successful**

Cause	Remedy	Severity/response
EtherCAT - State change of master successful	For information only. No remedy necessary.	Warning

805311882 | 0x3000158A **EtherCAT - Bus scan successful**

Cause	Remedy	Severity/response
EtherCAT - Bus scan successful	For information only. No remedy necessary.	Warning

805311883 | 0x3000158B **EtherCAT - Bus scan error**

Cause	Remedy	Severity/response
Error in the network topology	Check network topology.	Warning

805311884 | 0x3000158C **EtherCAT - Distributed clocks state**

Cause	Remedy	Severity/response
		Warning

805311885 | 0x3000158D **EtherCAT - Distributed clocks - Latching state**

Cause	Remedy	Severity/response
		Warning

805311886 | 0x3000158E **CoE - SDO download failure**

Cause	Remedy	Severity/response
Internal error	Restart the device. If the error persists, contact the manufacturer.	Warning

805311887 | 0x3000158F **CoE - SDO upload failure**

Cause	Remedy	Severity/response
Internal error	Restart the device. If the error persists, contact the manufacturer.	Warning

805311888 | 0x30001590 **CoE - OD-list upload failure**

Cause	Remedy	Severity/response
Internal error	Restart the device. If the error persists, contact the manufacturer.	Warning

805311889 | 0x30001591 **CoE - Object description upload failure**

Cause	Remedy	Severity/response
Internal error	Restart the device. If the error persists, contact the manufacturer.	Warning

805311890 | 0x30001592 **CoE - Object entry description upload failure**

Cause	Remedy	Severity/response
Internal error	Restart the device. If the error persists, contact the manufacturer.	Warning

805311891 | 0x30001593 **CoE - Emergency transfer failure**

Cause	Remedy	Severity/response
Internal error	Restart the device. If the error persists, contact the manufacturer.	Warning

805311892 | 0x30001594 **CoE - Emergency request**

Cause	Remedy	Severity/response
Internal error during transmission of emergency messages.	Check the documentation of the slave device for this emergency message. Note: "data: ..." shows by codes which error has occurred in which slave device/module. Detailed information about the coding of error messages can be found in the documentation of the corresponding slave device/module.	Warning

805311893 | 0x30001595 **Cyclic command WKC error**

Cause	Remedy	Severity/response
WKC error	Check slave status. Check network topology.	Warning

805311894 | 0x30001596 **Master init command WKC error**

Cause	Remedy	Severity/response
WKC error	Check slave status. Check network topology.	Warning

805311895 | 0x30001597 **Slave init command WKC error**

Cause	Remedy	Severity/response
WKC error	Check slave status. Check network topology.	Warning

805311896 | 0x30001598 **EoE receive WKC error**

Cause	Remedy	Severity/response
WKC error	Check slave status. Check network topology.	Warning

805311897 | 0x30001599 **CoE receive WKC error**

Cause	Remedy	Severity/response
WKC error	Check slave status. Check network topology.	Warning

805311898 | 0x3000159A **FoE receive WKC error**

Cause	Remedy	Severity/response
WKC error	Check slave status. Check network topology.	Warning

805311899 | 0x3000159B **SoE receive - WKC error**

Cause	Remedy	Severity/response
WKC error	Check slave status. Check network topology.	Warning

805311900 | 0x3000159C **EoE send WKC error**

Cause	Remedy	Severity/response
WKC error	Check slave status. Check network topology.	Warning

805311901 | 0x3000159D **CoE send WKC error**

Cause	Remedy	Severity/response
WKC error	Check slave status. Check network topology.	Warning

805311902 | 0x3000159E **FoE send WKC error**

Cause	Remedy	Severity/response
WKC error	Check slave status. Check network topology.	Warning

805311903 | 0x3000159F **SoE send - WKC error**

Cause	Remedy	Severity/response
WKC error	Check slave status. Check network topology.	Warning

805311904 | 0x300015A0 **Retry sending a frame**

Cause	Remedy	Severity/response
		Warning

805311905 | 0x300015A1 **Response on Ethernet frame**

Cause	Remedy	Severity/response
		Warning

805311906 | 0x300015A2 **Additional error information**

Cause	Remedy	Severity/response
Internal error	Restart the device. If the error persists, contact the manufacturer.	Warning

805311907 | 0x300015A3 **EtherCAT command - IDX actual value**

Cause	Remedy	Severity/response
Internal error	Restart the device. If the error persists, contact the manufacturer.	Warning

805311908 | 0x300015A4 **EtherCAT command - IDX set value**

Cause	Remedy	Severity/response
Internal error	Restart the device. If the error persists, contact the manufacturer.	Warning

805311909 | 0x300015A5 **Init command response error - No response**

Cause	Remedy	Severity/response
Internal error	Restart the device. If the error persists, contact the manufacturer.	Warning

805311910 | 0x300015A6 **Init command response error - Validation error**

Cause	Remedy	Severity/response
Internal error	Restart the device. If the error persists, contact the manufacturer.	Warning

805311911 | 0x300015A7 **Init command response error - Failed**

Cause	Remedy	Severity/response
Internal error	Restart the device. If the error persists, contact the manufacturer.	Warning

805311912 | 0x300015A8 **Master init command response error - No response**

Cause	Remedy	Severity/response
Internal error	Restart the device. If the error persists, contact the manufacturer.	Warning

805311913 | 0x300015A9 **Master init command response error - Validation error**

Cause	Remedy	Severity/response
Internal error	Restart the device. If the error persists, contact the manufacturer.	Warning

805311914 | 0x300015AA **Missing EtherCAT command in Ethernet frame**

Cause	Remedy	Severity/response
Internal error	Restart the device. If the error persists, contact the manufacturer.	Warning

805311915 | 0x300015AB **Mailbox init command timeout**

Cause	Remedy	Severity/response
Internal error	Restart the device. If the error persists, contact the manufacturer.	Warning

805311916 | 0x300015AC **At least one EtherCAT slave not in 'Operational'**

Cause	Remedy	Severity/response
Master is "Operational". At least one slave is not "Operational".	Check slave status. Check network topology.	Warning

805311917 | 0x300015AD **EtherCAT cable connected**

Cause	Remedy	Severity/response
EtherCAT cable connected	For information only. No remedy necessary.	Warning

805311918 | 0x300015AE **EtherCAT cable not connected**

Cause	Remedy	Severity/response
Network cabling is faulty.	Check network cabling.	Warning

805311919 | 0x300015AF **Cyclic commands - Time-out**

Cause	Remedy	Severity/response
Internal error	Restart the device. If the error persists, contact the manufacturer.	Warning

805311920 | 0x300015B0 **Redundant operation - Ethernet cable is missing at 2nd EtherCAT interface**

Cause	Remedy	Severity/response
Network cabling is faulty.	Check network cabling.	Warning

805311921 | 0x300015B1 **At least one slave is in state 'Error'**

Cause	Remedy	Severity/response
At least one slave is in the "Error" state.	Check slave status. Check network topology.	Warning

805311922 | 0x300015B2 **Slave error**

Cause	Remedy	Severity/response
A slave reports an error.	Analyze detailed error message in the logbook. Check slave status. Check network topology.	Warning

805311923 | 0x300015B3 **Communication to device interrupted**

Cause	Remedy	Severity/response
The connection to the slave is interrupted. The slave does not respond. The slave is no longer available.	Check slave status. Check network topology.	Warning

805311924 | 0x300015B4 **SDO abort**

Cause	Remedy	Severity/response
CoE access denied.	Analyze detailed error message in the logbook. Check object properties. Check transfer properties.	Warning

805311925 | 0x300015B5 **DC slaves are 'in-sync'**

Cause	Remedy	Severity/response
DC slaves are 'in-sync'	For information only. No remedy necessary.	Warning

805311926 | 0x300015B6 **DC slaves are 'out-of-sync'**

Cause	Remedy	Severity/response
The DC deviation is outside the permissible limits.	Check slave status. Check slave properties. Check network topology.	Warning

805311927 | 0x300015B7 **DC single latch on slave**

Cause	Remedy	Severity/response
Internal message	For information only. No remedy necessary.	Warning

805311928 | 0x300015B8 **MbxTferRcv - file upload failure**

Cause	Remedy	Severity/response
Internal error	Restart the device. If the error persists, contact the manufacturer.	Warning

805311929 | 0x300015B9 **MbxTferRcv - file download failure**

Cause	Remedy	Severity/response
Internal error	Restart the device. If the error persists, contact the manufacturer.	Warning

805311930 | 0x300015BA **Client registration lost**

Cause	Remedy	Severity/response
Internal error	Restart the device. If the error persists, contact the manufacturer.	Warning

805311931 | 0x300015BB **Redundant operation - Ethernet cable connected**

Cause	Remedy	Severity/response
		Warning

805311932 | 0x300015BC **SoE write error init command mbox**

Cause	Remedy	Severity/response
		Warning

805311960 | 0x300015D8 **Hot Connect - all groups detected**

Cause	Remedy	Severity/response
		Warning

805311961 | 0x300015D9 **Hot Connect - all group errors detected**

Cause	Remedy	Severity/response
		Warning

805311962 | 0x300015DA **Slave removed from bus**

Cause	Remedy	Severity/response
A slave has been removed from the network topology.	For information only. No remedy necessary.	Warning

805311963 | 0x300015DB **Slave added to bus**

Cause	Remedy	Severity/response
A slave has been added to the network topology.	For information only. No remedy necessary.	Warning

805311964 | 0x300015DC **Topology was changed**

Cause	Remedy	Severity/response
The network topology has been changed.	For information only. No remedy necessary.	Warning

805311965 | 0x300015DD **Port closed**

Cause	Remedy	Severity/response
"Border Close" has been executed on the port.	Analyze detailed error message in the logbook.	Warning

805311966 | 0x300015DE **MbxTferRcv - Write IDN failure**

Cause	Remedy	Severity/response
IDN - Write error.	Analyze detailed error message in the logbook.	Warning

805311967 | 0x300015DF **MbxTferRcv - Read IDN failure**

Cause	Remedy	Severity/response
IDN - read error.	Analyze detailed error message in the logbook.	Warning

805311968 | 0x300015E0 **SoE - Emergency transfer failure**

Cause	Remedy	Severity/response
SoE - emergency transfer error.	Analyze detailed error message in the logbook.	Warning

805311969 | 0x300015E1 **SoE - Emergency request**

Cause	Remedy	Severity/response
SoE - emergency request.	Analyze detailed error message in the logbook.	Warning

805311970 | 0x300015E2 **SoE - Notification transfer failure**

Cause	Remedy	Severity/response
SoE - transfer error during a notification.	Analyze detailed error message in the logbook.	Warning

805311971 | 0x300015E3 **SoE - Notification request**

Cause	Remedy	Severity/response
SoE - notification has been requested.	Analyze detailed error message in the logbook.	Warning

805311972 | 0x300015E4 **FoE abort**

Cause	Remedy	Severity/response
FoE has been aborted.	Check file. Check transfer properties. Analyze detailed error message in the logbook.	Warning

805312069 | 0x30001645 **Bus scan state**

Cause	Remedy	Severity/response
Bus scan state	For information only. No remedy necessary.	Warning

805312071 | 0x30001647 **Latch/Edge - No edge**

Cause	Remedy	Severity/response
No edge.	Analyze detailed error message in the logbook.	Warning

805312072 | 0x30001648 **Remote API diagnosis port - Connection established**

Cause	Remedy	Severity/response
Remote API diagnosis port - Connection established	For information only. No remedy necessary.	Warning

805312073 | 0x30001649 **Remote API diagnosis port - Connection disconnected**

Cause	Remedy	Severity/response
Remote API diagnosis port - Connection disconnected	For information only. No remedy necessary.	Warning

805312074 | 0x3000164A **Client registered from cookie**

Cause	Remedy	Severity/response
Client has registered with cookie.	Analyze detailed error message in the logbook.	Warning

805312075 | 0x3000164B **Client unregistered from cookie**

Cause	Remedy	Severity/response
Client logged out from cookie.	Analyze detailed error message in the logbook.	Warning

805312076 | 0x3000164C **Unknown notification**

Cause	Remedy	Severity/response
Internal error	Restart the device. If the error persists, contact the manufacturer.	Warning

805312077 | 0x3000164D **Slave latched**

Cause	Remedy	Severity/response
Internal error	Restart the device. If the error persists, contact the manufacturer.	Warning

805312078 | 0x3000164E **Bus scan - Error**

Cause	Remedy	Severity/response
Internal error	Restart the device. If the error persists, contact the manufacturer.	Warning

805312079 | 0x3000164F **Invalid number of slaves**

Cause	Remedy	Severity/response
The number of detected slaves differs from the number of expected slaves.	Analyze detailed error message in the logbook. Check network topology.	Warning

805312080 | 0x30001650 **Cannot get SlaveInfo**

Cause	Remedy	Severity/response
Internal error	Restart the device. If the error persists, contact the manufacturer.	Warning

805312081 | 0x30001651 **Deviation of slave**

Cause	Remedy	Severity/response
Internal error	Restart the device. If the error persists, contact the manufacturer.	Warning

805312082 | 0x30001652 **Slave is not configured**

Cause	Remedy	Severity/response
The slave is not configured	Check slave status. Check network topology.	Warning

805312083 | 0x30001653 **SlaveInfo**

Cause	Remedy	Severity/response
Internal error	Restart the device. If the error persists, contact the manufacturer.	Warning

805312084 | 0x30001654 **SLV - Error retrieving configuration data**

Cause	Remedy	Severity/response
Internal error	Restart the device. If the error persists, contact the manufacturer.	Warning

805312085 | 0x30001655 **Bus scan - Deviation**

Cause	Remedy	Severity/response
Internal error	Restart the device. If the error persists, contact the manufacturer.	Warning

805312086 | 0x30001656 **Communication to device interrupted**

Cause	Remedy	Severity/response
Communication interruption	Check slave status. Check network topology.	Warning

805312087 | 0x30001657 **Slave is not in expected status**

Cause	Remedy	Severity/response
Detected slave status differs from expected slave status.	Analyze detailed error message in the logbook. Check slave status. Check network topology.	Warning

805312090 | 0x3000165A **Wrong response on 'configured fix address request' for slave**

Cause	Remedy	Severity/response
Wrong response to the request.	Check slave status. Check network topology.	Warning

805312091 | 0x3000165B **Wrong response on 'alias address' request for slave**

Cause	Remedy	Severity/response
Wrong response to the request.	Check slave status. Check network topology.	Warning

805312092 | 0x3000165C **Cannot execute EC_IOCTL_DC_SLV_SYNC_DEVLIMIT_GET**

Cause	Remedy	Severity/response
The command cannot be executed	Analyze detailed error message in the logbook.	Warning

805312093 | 0x3000165D **Cannot read latch timer**

Cause	Remedy	Severity/response
Read error	Analyze detailed error message in the logbook.	Warning

805312094 | 0x3000165E **Cannot execute EC_IOCTL_DC_SLV_SYNC_RESTART**

Cause	Remedy	Severity/response
The command cannot be executed	Analyze detailed error message in the logbook.	Warning

805312097 | 0x30001661 **RAP - Invalid parameter size**

Cause	Remedy	Severity/response
RAP - Invalid parameter size	For information only. No remedy necessary.	Warning

805312098 | 0x30001662 **RAP - Marshaling error**

Cause	Remedy	Severity/response
Order error	Analyze detailed error message in the logbook.	Warning

805312099 | 0x30001663 **Unable to enqueue (missing calls to ProcessNotificationJobs)**

Cause	Remedy	Severity/response
		Warning

805312100 | 0x30001664 **No connection to slaves**

Cause	Remedy	Severity/response
Possibly the network cable is missing.	Check slave status. Check network topology.	Warning

805312101 | 0x30001665 **ecatSetTargetState cannot set EtherCAT master into target state, master is busy (time-out)**

Cause	Remedy	Severity/response
Internal error	Restart the device. If the error persists, contact the manufacturer.	Warning

805312102 | 0x30001666 **ecatStop() returns 'Busy', retry...**

Cause	Remedy	Severity/response
Internal error	Restart the device. If the error persists, contact the manufacturer.	Warning

805312103 | 0x30001667 **Mailbox transfer request - Error**

Cause	Remedy	Severity/response
Internal error	Restart the device. If the error persists, contact the manufacturer.	Warning

805312104 | 0x30001668 **Mailbox transfer**

Cause	Remedy	Severity/response
Internal error	Restart the device. If the error persists, contact the manufacturer.	Warning

805312105 | 0x30001669 **Waiting for mailbox transfer from master...**

Cause	Remedy	Severity/response
Internal error	Restart the device. If the error persists, contact the manufacturer.	Warning

805312106 | 0x3000166A **Mailbox transfer - Fatal time-out error**

Cause	Remedy	Severity/response
Internal error	Restart the device. If the error persists, contact the manufacturer.	Warning

805312107 | 0x3000166B **Bus cycle and Sync period are different**

Cause	Remedy	Severity/response
Incorrect setting.	Check bus cycle. Check sync period.	Warning

805312108 | 0x3000166C **Error getting the bus scan state**

Cause	Remedy	Severity/response
Internal error	Restart the device. If the error persists, contact the manufacturer.	Warning

805312109 | 0x3000166D **Wrong response on DC supported request or slave**

Cause	Remedy	Severity/response
Internal error	Restart the device. If the error persists, contact the manufacturer.	Warning

805312110 | 0x3000166E **Unable to set 'DC slave sync disable'**

Cause	Remedy	Severity/response
Internal error	Restart the device. If the error persists, contact the manufacturer.	Warning

805312111 | 0x3000166F **Error when restarting bus scan**

Cause	Remedy	Severity/response
Internal error	Restart the device. If the error persists, contact the manufacturer.	Warning

805312112 | 0x30001670 **Bus scan timeout**

Cause	Remedy	Severity/response
The bus scan was aborted due to timeout.	Analyze detailed error message in the logbook. Check network topology.	Warning

805312568 | 0x30001838 **Configuration error - Check of VendorID failed**

Cause	Remedy	Severity/response
The vendor ID could not be checked.	Analyze detailed error message in the logbook. Check network topology.	Warning

805312569 | 0x30001839 **Configuration error - Check of ProductCode failed**

Cause	Remedy	Severity/response
The product code could not be checked.	Analyze detailed error message in the logbook. Check network topology.	Warning

805312570 | 0x3000183A **Configuration error - Check of Revision failed**

Cause	Remedy	Severity/response
The revision could not be checked.	Analyze detailed error message in the logbook. Check network topology.	Warning

805312571 | 0x3000183B **Configuration error - Check of VendorID failed**

Cause	Remedy	Severity/response
The vendor ID could not be checked.	Analyze detailed error message in the logbook. Check network topology.	Warning

805312572 | 0x3000183C **Configuration error - Odd device at bus end**

Cause	Remedy	Severity/response
A surplus device was detected at the end of the bus.	Analyze detailed error message in the logbook. Check network topology.	Warning

805312578 | 0x30001842 **Internal error counter resetted**

Cause	Remedy	Severity/response
Internal error counter resetted	For information only. No remedy necessary.	Warning

805312580 | 0x30001844 **All slaves 'Operational' again**

Cause	Remedy	Severity/response
All slaves 'Operational' again	For information only. No remedy necessary.	Warning

805312581 | 0x30001845 **Cyclic command WKC error**

Cause	Remedy	Severity/response
WKC error	Analyze detailed error message in the logbook. Check slave status. Check network topology.	Warning

805312582 | 0x30001846 **Frame response error**

Cause	Remedy	Severity/response
Frame response error	Analyze detailed error message in the logbook. Check slave status. Check network topology.	Warning

805312583 | 0x30001847 **Not all slaves are 'Operational'**

Cause	Remedy	Severity/response
Not all slaves have been set to 'Operational'.	Analyze detailed error message in the logbook. Check slave status. Check network topology.	Warning

805312584 | 0x30001848 **Emergency message - Overflow, further messages blocked**

Cause	Remedy	Severity/response
Too many emergency messages.	Check if slave sends too many emergency messages. Eliminate cause.	Warning

805312588 | 0x3000184C **New configuration loaded**

Cause	Remedy	Severity/response
New configuration loaded	For information only. No remedy necessary.	Warning

805312589 | 0x3000184D **New configuration loaded, no slaves defined**

Cause	Remedy	Severity/response
New configuration loaded, no slaves defined	For information only. No remedy necessary.	Warning

805312590 | 0x3000184E **Master - Start failed, configuration error**

Cause	Remedy	Severity/response
Internal error	See related entries in the logbook.	Warning

805312591 | 0x3000184F **New configuration loaded from slaves EEPROM**

Cause	Remedy	Severity/response
New configuration loaded from slaves EEPROM	For information only. No remedy necessary.	Warning

805312598 | 0x30001856 **Master - Start failed**

Cause	Remedy	Severity/response
Internal error	See related entries in the logbook.	Warning

805312599 | 0x30001857 **Master - Start failed, bus configuration error**

Cause	Remedy	Severity/response
Bus configuration error	Check network topology.	Warning

805312600 | 0x30001858 **Master - Start failed, EtherCAT cable disconnected**

Cause	Remedy	Severity/response
Network cabling is faulty.	Check network cabling.	Warning

805312601 | 0x30001859 **Master - Start failed, DC/DCM configuration**

Cause	Remedy	Severity/response
Internal error	Restart the device. If the error persists, contact the manufacturer.	Warning

805312602 | 0x3000185A **Master - Start failed, cannot set slaves to 'Pre-Operational'**

Cause	Remedy	Severity/response
Slaves cannot be set to 'Pre-Operational'.	See related entries in the logbook.	Warning

805312608 | 0x30001860 **Master - Set 'Operational' failed**

Cause	Remedy	Severity/response
Operational' could not be set.	See related entries in the logbook.	Warning

805312609 | 0x30001861 **Master - Set 'Operational' failed, Master not initialized**

Cause	Remedy	Severity/response
Master not initialized.	See related entries in the logbook.	Warning

805312610 | 0x30001862 **Master - Set 'Operational' failed, EtherCAT cable disconnected**

Cause	Remedy	Severity/response
Network cabling is faulty.	Check network cabling.	Warning

805312611 | 0x30001863 **Master - Set 'Operational' failed, DCM not in-sync**

Cause	Remedy	Severity/response
Internal error	See related entries in the logbook.	Warning

805312612 | 0x30001864 **Master - Set 'Operational' failed, bus cycle and DC different**

Cause	Remedy	Severity/response
Incorrect setting.	Check bus cycle. Check sync period.	Warning

805312613 | 0x30001865 **Master - Set 'Operational' takes some time...**

Cause	Remedy	Severity/response
Master - Set 'Operational' takes some time...	For information only. No remedy necessary.	Warning

805312614 | 0x30001866 **Master - Set 'Operational' failed, time-out**

Cause	Remedy	Severity/response
	See related entries in the logbook. Check slave status. Check network topology.	Warning

805312615 | 0x30001867 **Master - Set 'Operational' failed, slave error**

Cause	Remedy	Severity/response
Slave error	See related entries in the logbook.	Warning

805312616 | 0x30001868 **Master - Set 'Operational' aborted by reset command**

Cause	Remedy	Severity/response
Master - Set 'Operational' aborted by reset command	For information only. No remedy necessary.	Warning

805312618 | 0x3000186A **Master - Stopping failed**

Cause	Remedy	Severity/response
Master cannot be stopped.	See related entries in the logbook.	Warning

805312619 | 0x3000186B **Master - Stopping failed, cannot set Slaves 'Pre-Operational'**

Cause	Remedy	Severity/response
Slave error	See related entries in the logbook.	Warning

805312628 | 0x30001874 **Master - Shutdown failed**

Cause	Remedy	Severity/response
Master - Shutdown failed	For information only. No remedy necessary.	Warning

805312638 | 0x3000187E **Remote API Server - Start failed**

Cause	Remedy	Severity/response
Internal error	Restart the device. If the error persists, contact the manufacturer.	Warning

805312648 | 0x30001888 **Start Download Service**

Cause	Remedy	Severity/response
Start Download Service	For information only. No remedy necessary.	Warning

805312649 | 0x30001889 **Download Service done**

Cause	Remedy	Severity/response
Download Service done	For information only. No remedy necessary.	Warning

805312668 | 0x3000189C **MMC - Internal error**

Cause	Remedy	Severity/response
Internal error	Restart the device. If the error persists, contact the manufacturer.	Warning

805312669 | 0x3000189D **MMC - 'Modular Machine Configuration' is active**

Cause	Remedy	Severity/response
MMC - "Modular Machine Configuration" is active.	For information only. No remedy necessary.	Warning

805312670 | 0x3000189E **MMC - Service started**

Cause	Remedy	Severity/response
MMC - Service started	For information only. No remedy necessary.	Warning

805312671 | 0x3000189F **MMC - Service stopped**

Cause	Remedy	Severity/response
MMC - Service stopped	For information only. No remedy necessary.	Warning

805312672 | 0x300018A0 **MMC - Error in configuration files**

Cause	Remedy	Severity/response
MMC configuration file is faulty.	Check MMC configuration file.	Warning

805312673 | 0x300018A1 **MMC - File does not exist**

Cause	Remedy	Severity/response
MMC - File does not exist	For information only. No remedy necessary.	Warning

805312674 | 0x300018A2 **MMC - Parsing error**

Cause	Remedy	Severity/response
MMC configuration file is faulty.	Check MMC configuration file.	Warning

805312675 | 0x300018A3 **MMC - parsing of file successful**

Cause	Remedy	Severity/response
MMC - parsing of file successful	For information only. No remedy necessary.	Warning

805312676 | 0x300018A4 **MMC - Devices not sorted in ascending order or devices missing**

Cause	Remedy	Severity/response
MMC configuration file is faulty.	Check MMC configuration file.	Warning

805312677 | 0x300018A5 **MMC - Number of devices in device tree differs**

Cause	Remedy	Severity/response
MMC configuration file is faulty.	Check MMC configuration file. Check network topology.	Warning

805312678 | 0x300018A6 **MMC - Device type mismatch for Alias Address**

Cause	Remedy	Severity/response
MMC configuration file is faulty.	Check MMC configuration file. Analyze detailed error message in the logbook.	Warning

805312679 | 0x300018A7 **MMC - Invalid Alias Address**

Cause	Remedy	Severity/response
Incorrect alias address.	Check SSA addresses of the slaves. Analyze detailed error message in the logbook.	Warning

805312680 | 0x300018A8 **MMC - Duplicated Alias Address**

Cause	Remedy	Severity/response
Double alias address.	Check SSA addresses of the slaves. Analyze detailed error message in the logbook.	Warning

805312681 | 0x300018A9 **MMC - No configuration checks**

Cause	Remedy	Severity/response
MMC - No configuration checks	For information only. No remedy necessary.	Warning

805312682 | 0x300018AA **MMC - Invalid configuration**

Cause	Remedy	Severity/response
Internal error	Restart the device. If the error persists, contact the manufacturer.	Warning

805312683 | 0x300018AB **MMC - Mandatory slave missing**

Cause	Remedy	Severity/response
MMC configuration file is faulty. Network topology is faulty.	Check MMC configuration file. Check network topology.	Warning

805312684 | 0x300018AC **MMC - Optional slave is present, but not allowed**

Cause	Remedy	Severity/response
MMC configuration file is faulty. Network topology is faulty.	Check MMC configuration file. Check network topology.	Warning

805312685 | 0x300018AD **MMC - No valid service active**

Cause	Remedy	Severity/response
MMC - No valid service active	For information only. No remedy necessary.	Warning

805312686 | 0x300018AE **MMC - Address assignment error, less slaves connected than configured**

Cause	Remedy	Severity/response
MMC configuration file is faulty. Network topology is faulty.	Analyze detailed error message in the logbook. Check MMC configuration file. Check network topology.	Warning

805312687 | 0x300018AF **MMC - Address assignment error, more slaves connected than configured**

Cause	Remedy	Severity/response
MMC configuration file is faulty. Network topology is faulty.	Analyze detailed error message in the logbook. Check MMC configuration file. Check network topology.	Warning

805312688 | 0x300018B0 **MMC - Address assignment error, invalid device**

Cause	Remedy	Severity/response
MMC configuration file is faulty. Network topology is faulty.	Analyze detailed error message in the logbook. Check MMC configuration file. Check network topology.	Warning

805312689 | 0x300018B1 **MMC - Address assignment successful**

Cause	Remedy	Severity/response
MMC - Address assignment successful	For information only. No remedy necessary.	Warning

805312690 | 0x300018B2 **MMC - Address assignment failed**

Cause	Remedy	Severity/response
MMC configuration file is faulty. Network topology is faulty.	Analyze detailed error message in the logbook. Check MMC configuration file. Check network topology.	Warning

805312691 | 0x300018B3 **MMC - Address assignment done**

Cause	Remedy	Severity/response
MMC - Address assignment done	For information only. No remedy necessary.	Warning

805312692 | 0x300018B4 **MMC - Address assignment error, writing address by CoE**

Cause	Remedy	Severity/response
MMC - Address assignment error, writing address by CoE	For information only. No remedy necessary.	Warning

805312693 | 0x300018B5 **MMC - Slave identification error**

Cause	Remedy	Severity/response
MMC configuration file is faulty. Network topology is faulty.	Analyze detailed error message in the logbook. Check MMC configuration file. Check network topology.	Warning

805312694 | 0x300018B6 **MMC - Slave identification error, slave ident data failed**

Cause	Remedy	Severity/response
MMC configuration file is faulty. Network topology is faulty.	Analyze detailed error message in the logbook. Check MMC configuration file. Check network topology.	Warning

805312695 | 0x300018B7 **MMC - Service state cannot be changed, set bus to 'INIT' first**

Cause	Remedy	Severity/response
Service request rejected because master not in "Init" status	Check status of the master. Set status of the master to "Init".	Warning

805312867 | 0x30001963 **Last ETC message**

Cause	Remedy	Severity/response
		Warning

805405056 | 0x30018180 **EtherCAT - DC synchronization required**

Cause	Remedy	Severity/response
EtherCAT Distributed Clock (DC) not activated.	Activate DC mode.	Warning

805405057 | 0x30018181 **EtherCAT - Communication error**

Cause	Remedy	Severity/response
EtherCAT communication interrupted.	• Check bus cable. • Increase watchdog time.	Fault > CiA402 (configurable)
		Setting parameters: 0x285B:001

805405312 | 0x30018280 **EtherCAT - Wrong sync manager address**

Cause	Remedy	Severity/response
Wrong Sync Manager setting from EtherCAT master	• Check node. • Check the sequence of the nodes. • Check bus cable.	Fault

805405313 | 0x30018281 **EtherCAT - Wrong sync manager size**

Cause	Remedy	Severity/response
Wrong Sync Manager setting from EtherCAT master	• Check node. • Check the sequence of the nodes. • Check bus cable.	Fault

805405314 | 0x30018282 **EtherCAT - Wrong sync manager settings**

Cause	Remedy	Severity/response
Wrong Sync Manager setting from EtherCAT master	• Check node. • Check the sequence of the nodes. • Check bus cable.	Fault

805405315 | 0x30018283 **PDO mapping: Unknown object**

Cause	Remedy	Severity/response
Unknown index in the PDO mapping	Correct PDO mapping.	Fault

805405316 | 0x30018284 **No PDO mapping object**

Cause	Remedy	Severity/response
The index cannot be mapped as PDO.	Correct PDO mapping.	Fault

805405317 | 0x30018285 **Too many objects mapped**

Cause	Remedy	Severity/response
More than 64 objects are mapped.	Reduce number of objects in PDO mapping.	Fault

805405318 | 0x30018286 **PDO mapping error**

Cause	Remedy	Severity/response
PDO mapping is faulty.	Check PDO mapping.	Fault

805405320 | 0x30018288 **PDO mapping object is already used by PLC.**

Cause	Remedy	Severity/response
The object to be mapped is already used by the PLC.	Remove object from mapping.	Fault

805406464 | 0x30018700 **EtherCAT - Sync error**

Cause	Remedy	Severity/response
• EtherCAT Sync0 has failed. • PDO was sent or received too late.	• Check in the EtherCAT master configuration whether Distributed Clock is activated. • Restart EtherCAT configuration. • Shift PDO reception time via user shift time. • Increase telegram failure error counter: ▸ 0x10F1:002	Fault

805406465 | 0x30018701 **Sync PLL - Time-out**

Cause	Remedy	Severity/response
Error during state change Pre-Operational → Safe-Operational: • EtherCAT Sync0 has failed. • The Sync0 jitter is too high.	• Check DC deviation in EtherCAT master. • Restart EtherCAT configuration.	Fault

805437220 | 0x3001FF24 **Invalid Sync0 cycle time**

Cause	Remedy	Severity/response
The requested Sync0 cycle is outside the supported limits.	Correct Sync0 cycle.	Fault

805437270 | 0x3001FF56 **Check OUT-port of EtherCAT master**

Cause	Remedy	Severity/response
The Ethernet connector is plugged into the IN port.	Correct wiring.	(configurable)
		Setting parameters:

805437271 | 0x3001FF57 **Check IN-port of EtherCAT slave**

Cause	Remedy	Severity/response
The Ethernet connector is plugged into the OUT port.	Correct wiring.	(configurable)
		Setting parameters:

822313234 | 0x31038112 **Network - Time-out explicit message**

Cause	Remedy	Severity/response
• Within the time-out period for explicit messages, which has been parameterised by the scanner, no "explicit message" was received. • The connection to the scanner has been interrupted. • Failure of an explicit connection.	• Check cables and terminals. • Plug network cables into the Ethernet port. • Check the requested package interval (RPI) of the explicit connection. • Increase time limit for explicit messages in the scanner.	(configurable) Setting parameters:

822313236 | 0x31038114 **Network - Overall communication time-out**

Cause	Remedy	Severity/response
• EtherNet/IP: the maximum permissible time-out period for the CIP communication set in 0x23A1:010 has been exceeded. • Modbus TCP/IP: the maximum permissible time-out period for the TCP communication set in has been exceeded.	• Check cables and terminals. • Connect network cable.	Warning (configurable) Setting parameters: 0x2859:007

822313346 | 0x31038182 **CAN: bus off**

Cause	Remedy	Severity/response
Too many faulty frames have been received. • Defective cable (e. g. loose contact). • Two nodes with the same node address.	• Check wiring of the network. • Check bus terminating resistor. • Set the identical baud rate for each node of the network. • Assign a unique node address to each node of the network. • Eliminate EMC interferences.	Warning (configurable) • Change to the "Bus-Off" communication status. Setting parameters: 0x2857:010

822313347 | 0x31038183 **CAN: warning**

Cause	Remedy	Severity/response
Too many faulty frames have been received. • Defective cable (e. g. loose contact). • Two nodes with the same node address.	• Check wiring of the network. • Check bus terminating resistor. • Set the identical baud rate for each node of the network. • Assign a unique node address to each node of the network. • Eliminate EMC interferences.	Warning (configurable) Setting parameters: 0x2857:011

822313348 | 0x31038184 **CAN: heartbeat time-out consumer 1**

Cause	Remedy	Severity/response
Within the heartbeat time , no heartbeat telegram was received by node 1 to be monitored.	• Check communication with the heartbeat producer. • Reactivate heartbeat producer.	Warning (configurable) Setting parameters: 0x2857:005

Related topics
▸ Heartbeat protocol 🕮 349

822313349 | 0x31038185 **CAN: heartbeat time-out consumer 2**

Cause	Remedy	Severity/response
Within the heartbeat time , no heartbeat telegram was received by node 2 to be monitored.	• Check communication with the heartbeat producer. • Reactivate heartbeat producer.	Warning (configurable) Setting parameters: 0x2857:006

Related topics
▸ Heartbeat protocol 349

822313350 | 0x31038186 **CAN: heartbeat time-out consumer 3**

Cause	Remedy	Severity/response
Within the heartbeat time , no heartbeat telegram was received by node 3 to be monitored.	• Check communication with the heartbeat producer. • Reactivate heartbeat producer.	Warning (configurable) Setting parameters: 0x2857:007

Related topics
▸ Heartbeat protocol 349

822313351 | 0x31038187 **CAN: heartbeat time-out consumer 4**

Cause	Remedy	Severity/response
Within the heartbeat time , no heartbeat telegram was received by node 4 to be monitored.	• Check communication with the heartbeat producer. • Reactivate heartbeat producer.	Warning (configurable) Setting parameters: 0x2857:008

Related topics
▸ Heartbeat protocol 349

822313360 | 0x31038190 **Network - Watchdog time-out**

Cause	Remedy	Severity/response
Time-out during cyclic data reception, e.g. due to an interrupted communication link to the master or missing cyclic data.	• Check wiring of the network. • Eliminate EMC interferences.	Warning (configurable) Setting parameters: 0x2859:001

822313361 | 0x31038191 **Network - Disruption of cyclic data exchange**

Cause	Remedy	Severity/response
The communication partner has interrupted the cyclic data exchange.	• Check wiring of the network. • The slave must receive new parameterisation and configuration files by the master, in order to be able to exchange data again.	No response (configurable) Setting parameters: 0x2859:002

822313362 | 0x31038192 **Network - Initialization error**

Cause	Remedy	Severity/response
The initialisation of the communication stack has been interrupted due to an incorrect address setting or communication configuration.	Check master/slave configuration and restart the devices.	Warning (configurable) Setting parameters: 0x2859:004

822313363 | 0x31038193 **Network - Invalid cyclic process data**

Cause	Remedy	Severity/response
The cyclic process data received are invalid.	Check cyclic process data sent by the master.	Warning (configurable) Setting parameters: 0x2859:005

822313370 | 0x3103819A **Network - Initialization with safety option failed**

Cause	Remedy	Severity/response
Communication with the safety option could not be initialized correctly.	Check safe parameter set.	Information

822313371 | 0x3103819B **Network - Communication time-out with safety option**

Cause	Remedy	Severity/response
Communication with the safety option is disturbed.	Check status of the safety option.	Information

822313607 | 0x31038287 **Network - Invalid configuration**

Cause	Remedy	Severity/response
Network configuration is faulty.	Check network configuration.	Warning (configurable)
		Setting parameters: 0x2859:003

822313617 | 0x31038291 **CAN: RPDO1 time-out**

Cause	Remedy	Severity/response
RPDO1 was not received within the time-out period set in 0x2304:045 or with the sync configured.		Warning (configurable)
		Setting parameters: 0x2857:001

Related topics
- Process data transfer 338

822313618 | 0x31038292 **CAN: RPDO2 time-out**

Cause	Remedy	Severity/response
RPDO2 was not received within the time-out period set in 0x2304:055 or with the sync configured.		Warning (configurable)
		Setting parameters: 0x2857:002

Related topics
- Process data transfer 338

822313620 | 0x31038294 **CAN: RPDO4 time-out**

Cause	Remedy	Severity/response
RPDO4 was not received within the time-out period set in 0x2304:075 or with the sync configured.		Warning (configurable)
		Setting parameters: 0x2857:004

Related topics
- Process data transfer 338

19.5.3 Extended Safety - Parameter set plausibility errors

The following table contains the detailed information about the possible plausibility errors.

The error code corresponds to the entry in 0x2115:005.

Error information 1 0x2115:005	Error in the setting of the safe parameterization
1	If SD-In1 is deactivated, SD-In1 must not be parameterized as a source for any function.
2	If SD-In2 is deactivated, SD-In2 must not be parameterized as a source for any function.
3	If SD-In3 is deactivated, SD-In3 must not be parameterized as a source for any function.
4	If SD-In4 is deactivated, SD-In4 must not be parameterized as a source for any function.
5	If no safety bus is parameterized, no S-Bus bit may be parameterized as source for a function.
6	If no motor encoder is parameterized, no function requiring an encoder may be parameterized.
7	If cascading is parameterized: • SD-In4 must be parameterized as an active sensor. • SSE must be parameterized to STO via SD-In4. • The input delay for SD-In4 must be ≤10 ms. • The restart after STO must be "acknowledged". • SD-Out1 must not be controlled via S-Bus.
8	If a resolver is parameterized as motor encoder, max. 10000 rpm divided by the number of pole pairs of the resolver may be set as speed value due to the system.
9	If SS1 is parameterized so that STO is triggered after reaching n = 0, the delay time "STO after n = 0" must be less than or equal to the stopping time.
10	If OMS is used via the S-Bus, "OMS: Function at LOW level" must be equal to "Normal operation", because a level inversion on the S-Bus has no effect.
11	If OMS is used via S-Bus, at least one stop function must also be parameterized via S-Bus to switch to the safe state in the event of bus failure.
12	If no motor encoder system is parameterized, the delay time "STO after n = 0" must be zero.
13	The lower position limit for PDSS must be less than or equal to the upper position limit for PDSS.
14	The lower SCS limit for PDSS must be less than or equal to the upper SCS limit.
15	The lower position limit for SLP must be less than or equal to the upper position limit for SLP.
16	The lower position limit for SCA must be less than or equal to the upper position limit for SCA.
17	The lower diagnostic position for SHom must be less than or equal to the upper diagnostic position.
18	If the parameterized value for the maximum compensated slip is not zero, it must be less than or equal to the tolerance of the position comparison.
19	If the input source for SHom_Start is deactivated, no function based on an absolute position may be parameterized.
23	If the input source for the SHom diagnostic positions is not deactivated, the lower diagnostic position must be less than or equal to the upper diagnostic position. If PDSS is also used, the lower diagnostic position must be greater than the lower position limit and lower SCS limit.
24	If the input source for the SHom diagnostic positions is not deactivated, the upper diagnostic position must be greater than or equal to the lower diagnostic position. If PDSS is also used, the upper diagnostic position must be smaller than the upper position limit and upper SCS limit.
25	If no motor encoder system is parameterized, no load encoder system may be parameterized either.
26	If no load encoder system is parameterized, the gearbox factors for numerator and denominator must be set to default values (100). The load encoder mounting direction must be parameterized with the setting "Same as motor encoder".
27	If muting (MUT) is parameterized, a password must be assigned. Valid from safety parameter set V1.1.
29	If the S-Bus is to be hidden via muting (MUT), an S-Bus must also be parameterized. Valid from safety parameter set V1.1.
30	If SD-In1 is to be hidden via muting (MUT), SD-In1 must also be parameterized. Valid from safety parameter set V1.1.
31	If SD-In2 is to be hidden via muting (MUT), SD-In2 must also be parameterized. Valid from safety parameter set V1.1.
32	If SD-In3 is to be hidden via muting (MUT), SD-In3 must also be parameterized. Valid from safety parameter set V1.1.
33	If SD-In4 is to be hidden via muting (MUT), SD-In4 must also be parameterized. Valid from safety parameter set V1.1.
34	If the parameter set version is smaller than V1.1, only 0 ... 4 may be set for the S-Bus configuration. Valid from safety parameter set V1.0.
35	If SD-In1 is deactivated, SD-In1 must not be parameterized for SBC as source. Valid from safety parameter set V1.1.
36	If SD-In2 is deactivated, SD-In2 must not be parameterized for SBC as source. Valid from safety parameter set V1.1.
37	If SD-In3 is deactivated, SD-In3 must not be parameterized for SBC as source.

Error information 1 0x2115:005	Error in the setting of the safe parameterization
	Valid from safety parameter set V1.1.
38	If SD-In4 is deactivated, SD-In4 must not be parameterized for SBC as source. Valid from safety parameter set V1.1.
39	If no safety bus is parameterized, the S-Bus bit must not be parameterized as a source for SBC. Valid from safety parameter set V1.1.
40	The tolerance window of the diagnostic positions must lie completely within the displayable position range.
41	If the parameter set version is smaller than V1.2, only 0, 4 or 11 may be set for the S-Bus configuration. Valid from safety parameter set >V1.1.
42	If the parameter set version is smaller than V1.3, only 0, 1 or 2 may be set for the motor encoder configuration. Valid from safety parameter set >V1.2.
43	If the parameter set version is smaller than V1.3, the gearbox factor denominator may only be set to max. 100. Valid from safety parameter set >V1.2.
44	If the parameter set version is smaller than V1.3, the gearbox factor counter may only be set between 20 ... 50000 may be set. Valid from safety parameter set >V1.2.

20 Technical data

The technical data for the device (dimensions, rated data, standards and operating conditions) can be found in the associated project planning document.

Environmental notes and recycling

Lenze has been certified to the worldwide environmental management standard for many years (DIN EN ISO 14001). As part of our environmental policy and the associated climate responsibility, please note the following information on hazardous ingredients and the recycling of Lenze products and their packaging:

CE

Lenze products are partly subject to the EU Directive on the restriction of certain hazardous substances in electrical and electronic equipment 2011/65/EU: RoHS Directive [UKCA: S.I. 2012/3032 - The Restriction of the Use of Certain Hazardous Substances in Electrical and Electronic Equipment Regulations 2012]. This is documented accordingly in the EU declaration of conformity and with the CE mark.

The crossed-out wheeled bin symbol is located on the equipment. This information indicates that used electrical and electronic products must not be disposed of with normal household waste.
The EU Directive 2012/19/EU: Directive on waste electrical and electronic equipment (WEEE) [UKCA: S.I. 2013/3113 - The Waste Electrical and Electronic Equipment Regulations 2013], which has been transposed into national law by the respective EU member states, applies to the disposal of equipment. As a customer, you have the option of disposing of the electrical and electronic equipment that you have purchased from us and that is subject to WEEE via the Lenze branch in your country.
Lenze addresses in Europe: https://www.lenze.com/en-de/company/global-presence

Some Lenze products contain batteries/rechargeable batteries in accordance with EU Directive 2006/66/EC: Battery Directive [UKCA: S.I. 2009/890 - The Waste Batteries and Accumulators Regulations 2009]. Any batteries/rechargeable batteries included are designed to last the life of the product and do not need to be replaced or otherwise removed by the end user.

21 PAP

Lenze products are usually sold with cardboard or plastic packaging. This packaging complies with EU Directive 94/62/EC: Directive on packaging and packaging waste [UKCA: S.I. 1997/648 - The Producer Responsibility Obligations (Packaging Waste) Regulations 1997]. The required disposal route is indicated by material-specific labels with the "recycling triangle". Example: "21 - other cardboard"

REACH

Lenze products are subject to REGULATION (EC) No 1907/2006: REACH Regulation [UKCA: S.I. 2008/2852 - The REACH Enforcement Regulations 2008]. When used as intended, exposure of substances to humans, animals and the environment is excluded.

Lenze products are industrial electrical and electronic products and are disposed of professionally. Both the mechanical and electrical components such as electric motors, gearboxes or inverters contain valuable raw materials that can be recycled and reused. Proper recycling and thus maintaining the highest possible level of recyclability is therefore important and sensible from an economic and ecological point of view.

- Coordinate professional disposal with your waste disposal company.
- Separate mechanical and electrical components, packaging, hazardous waste (e.g. gear oils) and batteries/rechargeable batteries wherever possible.
- Dispose of the separated waste in an environmentally sound and proper manner (no household waste or municipal bulky waste).

What?	Material	Disposal instructions
Pallets	Wood	Return to manufacturers, freight forwarders or reusable materials collection system
Packaging material	Paper, cardboard, pasteboard, plastics	Collect and dispose of separately
Products		
Electronic devices	Metal, plastics, circuit boards, heatsinks	As electronic waste give to professional disposer for recycling
Gearbox	Oil	Drain oil and dispose of separately
	Casting, steel, aluminium	Dispose as metal scrap
Motors	Casting, copper, rotors, magnets, potting compound	As engine scrap give to professional disposer for recycling
Dry-cell batteries/rechargeable batteries		As used batteries give to professional disposer for recycling

Further information on Lenze's environmental and climate responsibility and on the topic of energy efficiency can be found on the Internet:

www.Lenze.com → search word: "Sustainability"

22 Appendix

22.1 Parameter attribute list

The parameter attribute list in particular contains some information required for reading and writing parameters via network.

Note the special features for writing the safe parameters of the Extended Safety:

»EASY Starter« or »PLC-Designer«: Writing the safe parameters is only possible via the "+Safe parameter list+" tab. The safe parameters can only be read via the "Parameter list" tab.

Higher-level controller: Writing of the safe parameters is possible by the parameter set transfer.

The following conventions are used in this documentation for specifying the parameter address:

- The index is specified as a hexadecimal value.
- The subindex is specified as a decimal value.

- The parameter attribute list contains all parameters of the inverter.
- The parameter attribute list is sorted by addresses (index:subindex) in ascending order.

How to read the parameter attribute list:

Column	Meaning		
Address	Address of the parameter in the object directory. Format: Index:Subindex		
Name	Parameter name		
Default setting	Default setting of the parameter		
Data type	Data type of the parameter:		
	I8	INTEGER_8	1 byte, with sign
	I16	INTEGER_16	2 bytes with sign
	I32	INTEGER_32	4 bytes with sign
	I64	INTEGER_64	8 bytes with sign
	U8	UNSIGNED_8	1 byte without sign
	U16	UNSIGNED_16	2 bytes without sign
	U32	UNSIGNED_32	4 bytes without sign
	U64	UNSIGNED_64	8 bytes without sign
	STRING[xx]	VISIBLE_STRING	ASCII string (with character length xx)
	OCTET[xx]	OCTET_STRING	OCTET string (with xx bytes)
	IDX		4 bytes without sign. Is used specially for addressing parameters.
Factor	Factor for data transmission via network, depending on the number of decimal positions:		
	1	no decimal positions	
	10	1 decimal position	
	100	2 decimal positions	
	1000	3 decimal positions	
	10000	4 decimal positions	
A	Attributes (combinations of several attributes also possible):		
	C	Setting can only be changed if the inverter is disabled.	
	E	Value is displayed as IP address.	
	H	Value is displayed in hexadecimal form.	
	T	Value is displayed as time.	
	X	Parameter is not displayed in the engineering tools.	
M	Mapping:		
	●	Mapping permitted.	
		Mapping not permissible.	

Parameter attribute list (short overview of all parameter indexes)

Address	Name	Default setting	Data type	Factor	A	M
0x1000	Device type	- (Read only)	U32	1	X	
0x1001	Error register	- (Read only)	U8	1	X	●
0x1008	Manufacturer device name	- (Read only)	STRING[50]		X	
0x1009	Manufacturer hardware version	- (Read only)	STRING[50]		X	
0x100A	Manufacturer software version	- (Read only)	STRING[50]		X	
0x1018:001	Identity object: Vendor ID	- (Read only)	U32	1	X	
0x1018:002	Identity object: Product Code	- (Read only)	U32		X	
0x1018:003	Identity object: Revision number	- (Read only)	U32	1	X	
0x1018:004	Identity object: Serial number	- (Read only)	U32	1	X	
0x10F1:001	Error settings: Local error reaction	**Device specific state [2]**	U32		X	
0x10F1:002	Error settings: Sync error counter limit	**20**	U16	1	-	
0x2000:001	Device data: Product code	- (Read only)	STRING[50]		X	
0x2000:002	Device data: Serial number	- (Read only)	STRING[50]		X	
0x2000:003	Device data: Production date	- (Read only)	STRING[50]		X	
0x2000:004	Device data: CU firmware version	- (Read only)	STRING[50]		X	
0x2000:006	Device data: CU bootloader version	- (Read only)	STRING[50]		X	
0x2000:008	Device data: Object directory version	- (Read only)	U32	1	X	
0x2000:015	Device data: Communication firmware revision number	- (Read only)	STRING[50]		X	
0x2000:019	Device data: Safety module version	- (Read only)	STRING[50]		X	
0x2001	Device name	"**Device**"	STRING[128]		-	
0x2002:001	Device module: Safety module	- (Read only)	STRING[50]		X	
0x2002:006	Device module: CU serial number	- (Read only)	STRING[50]		X	
0x2002:007	Device module: PU serial number	- (Read only)	STRING[50]		X	
0x2002:010	Device module: Type communication module	- (Read only)	STRING[50]		X	
0x2002:011	Device module: Serial number communication module	- (Read only)	STRING[50]		X	
0x2002:012	Device module: Hardware version communication module	- (Read only)	STRING[50]		X	
0x2002:013	Device module: Type encoder 1	- (Read only)	STRING[50]		X	
0x2002:014	Device module: Serial number encoder 1	- (Read only)	STRING[50]		X	
0x2002:015	Device module: Hardware version encoder 1	- (Read only)	STRING[50]		X	
0x2002:016	Device module: Type encoder 2	- (Read only)	STRING[50]		X	
0x2002:017	Device module: Serial number encoder 2	- (Read only)	STRING[50]		X	
0x2002:018	Device module: Hardware version encoder 2	- (Read only)	STRING[50]		X	
0x2010:001	Device event monitor: EreignisortEvent location	- (Read only)	U8		X	
0x2010:002	Device event monitor: Severity	- (Read only)	U8		X	
0x2010:003	Device event monitor: Event status	- (Read only)	U8		X	
0x2010:005	Device event monitor: Number of current event	- (Read only)	U32		HX	
0x2010:006	Device event monitor: Time stamp of current event	x ns (Read only)	U64	1	TX	
0x2012:001	Device information: SD card status	- (Read only)	U8		X	
0x2012:002	Device information: Application Credit available	- (Read only)	U16	1	X	
0x2013:001	Application information: Active application	- (Read only)	U16		X	
0x2013:002	Application information: Application Credit required	- (Read only)	U16	1	X	
0x2020:001	EoE information: Virtual MAC address	- (Read only)	STRING[32]		X	
0x2020:002	EoE information: IP address	- (Read only)	STRING[32]		X	
0x2020:003	EoE information: Subnet mask	- (Read only)	STRING[32]		X	
0x2020:004	EoE information: Standard gateway	- (Read only)	STRING[32]		X	
0x2020:005	EoE information: DNS server	- (Read only)	STRING[32]		X	
0x2020:006	EoE information: DNS name	- (Read only)	STRING[50]		X	
0x2020:007	EoE information: Received packages		U32	1	X	
0x2020:008	EoE information: Transmitted packages		U32	1	X	
0x2021:001	Optical tracking: Start detection	**Stop [0]**	U8		X	
0x2021:002	Optical tracking: Blinking duration	**5 s**	U16	1	X	
0x2022:001	Device commands: Load default settings	**Off / ready [0]**	U8		CX	

Address	Name	Default setting	Data type	Factor	A	M
0x2022:003	Device commands: Save user data	**Off / ready [0]**	U8		X	
0x2022:015	Device commands: Delete logbook	**Off / ready [0]**	U8		X	
0x2022:035	Device commands: Restart Device	**Off / ready [0]**	U8		X	
0x2022:036	Device commands: Export Logbook	**Off / ready [0]**	U8		X	
0x2022:037	Device commands: Delete Logfiles	**Off / ready [0]**	U8		X	
0x2022:038	Device commands: Activate loaded application	**Off / ready [0]**	U8		X	
0x2022:039	Device commands: Load TA default settings	**Off / ready [0]**	U8		CX	
0x2022:040	Device commands: Parameter-Backup	**Off / ready [0]**	U8		CX	
0x2022:041	Device commands: Restart extended safety	**Off / ready [0]**	U8		X	
0x2022:042	Device commands: Upload application	**Off / ready [0]**	U8		X	
0x2022:043	Device commands: Restore	**Off / ready [0]**	U8		CX	
0x2022:044	Device commands: Start application	**Off / ready [0]**	U8		CX	
0x2022:045	Device commands: Stop application	**Off / ready [0]**	U8		CX	
0x2030	CRC parameter set	- (Read only)	U32	1	X	
0x203D	PIN1 access protection	**0**	I16	1	-	
0x203E	PIN2 access protection	**0**	I16	1	-	
0x203F	PIN1/PIN2 log-in	**0**	I16	1	X	
0x2040	Access protection status	- (Read only)	U16		HX	
0x2100:001	Brand protection: PIN set	**0**	I32	1	X	
0x2100:002	Brand protection: PIN input	**0**	I32	1	X	
0x2100:003	Brand protection: Encryption	**0**	U8	1	X	
0x2110:014	Delete home position	**Ready [0]**	U8		X	
0x2110:015	Activate muting	**Ready [0]**	U8		X	
0x2114:001	Parameter set: Version	- (Read only)	U16		-	
0x2114:002	Parameter set: Project CRC	**0**	U32	1	-	
0x2115:001	Parameter set: Status	- (Read only)	U8		X	
0x2115:002	Parameter set: Current CRC	- (Read only)	U32	1	X	
0x2115:003	Parameter set: Last valid CRC	- (Read only)	U32	1	X	
0x2115:004	Parameter set: Parameter setting time stamp	x s (Read only)	U32	1	X	
0x2115:005	Parameter set: Error information 1	- (Read only)	U32	1	X	
0x2115:006	Parameter set: Error information 2	- (Read only)	U32	1	X	
0x2115:007	Parameter set: Error information 3	- (Read only)	U32	1	X	
0x2115:008	Parameter set: Current CRC without safety address	- (Read only)	U32	1	X	
0x2118:001	SD-In: SD-In1 sensor type	- (Read only)	U8		-	
0x2118:002	SD-In: SD-In2 sensor type	- (Read only)	U8		-	
0x2118:003	SD-In: SD-In3 sensor type	- (Read only)	U8		-	
0x2118:004	SD-In: SD-In4 sensor type	- (Read only)	U8		-	
0x2119:001	SD-In: SD-In1 discrepancy time	x ms (Read only)	U16	1	-	
0x2119:002	SD-In: SD-In2 discrepancy time	x ms (Read only)	U16	1	-	
0x2119:003	SD-In: SD-In3 discrepancy time	x ms (Read only)	U16	1	-	
0x2119:004	SD-In: SD-In4 discrepancy time	x ms (Read only)	U16	1	-	
0x211A:001	SD-In: SD-In1 input delay	x ms (Read only)	U16	1	-	
0x211A:002	SD-In: SD-In2 input delay	x ms (Read only)	U16	1	-	
0x211A:003	SD-In: SD-In3 input delay	x ms (Read only)	U16	1	-	
0x211A:004	SD-In: SD-In4 input delay	x ms (Read only)	U16	1	-	
0x211B	Input image	- (Read only)	U32		HX	
0x211C:001	Status bits inputs: SD-In1	- (Read only)	BOOLEAN	1	X	●
0x211C:002	Status bits inputs: SD-In2	- (Read only)	BOOLEAN	1	X	●
0x211C:003	Status bits inputs: SD-In3	- (Read only)	BOOLEAN	1	X	●
0x211C:004	Status bits inputs: SD-In4	- (Read only)	BOOLEAN	1	X	●
0x211C:005	Status bits inputs: AIS Dig-In	- (Read only)	BOOLEAN	1	X	
0x211C:006	Status bits inputs: AIE Dig-In	- (Read only)	BOOLEAN	1	X	
0x211C:007	Status bits inputs: IRS Dig-In	- (Read only)	BOOLEAN	1	X	
0x211C:008	Status bits inputs: IRL Dig-In	- (Read only)	BOOLEAN	1	X	
0x2120:001	SD-Out: SD-Out1 source S-Bus	- (Read only)	U8		-	

Address	Name	Default setting	Data type	Factor	A	M
0x2121:001	SD-Out: SD-Out1 logic function	- (Read only)	U8		-	
0x2122	Output image	- (Read only)	U16		HX	
0x2123:001	Status bits outputs: SD-Out1	- (Read only)	BOOLEAN	1	X	●
0x2124	CAS Source SD-In	- (Read only)	U8		-	
0x2125:001	CAS: Stop delay	x ms (Read only)	U16	1	X	
0x2128	S-Bus configuration	- (Read only)	U8		-	
0x2129:001	S-Bus control bits: SD-Out1	- (Read only)	BOOLEAN	1	X	●
0x212A:001	S-Bus: FSoE project CRC		U32	1	X	
0x212A:002	S-Bus: PROFIsafe status	- (Read only)	U8		X	
0x212A:003	S-Bus: PROFIsafe status byte	- (Read only)	U8		HX	
0x212A:004	S-Bus: PROFIsafe control byte	- (Read only)	U8		HX	
0x212C:001	Device module: ES firmware version	- (Read only)	STRING[50]		X	
0x212D:001	Device module: ES HW version	- (Read only)	STRING[50]		X	
0x212D:002	Device module: ES product code	- (Read only)	STRING[50]		X	
0x212D:003	Device module: ES serial number	- (Read only)	STRING[50]		X	
0x212D:004	Device module: ES production date	- (Read only)	STRING[50]		X	
0x2130:001	Event history: Current severity	- (Read only)	U8		X	
0x2130:002	Event history: Internal event 1	- (Read only)	U16		HX	
0x2130:003	Event history: Internal event 2	- (Read only)	U16		HX	
0x2130:004	Event history: Internal event 3	- (Read only)	U16		HX	
0x2130:005	Event history: Internal event 4	- (Read only)	U16		HX	
0x2130:006	Event history: Internal event 5	- (Read only)	U16		HX	
0x2130:007	Event history: Internal event 6	- (Read only)	U16		HX	
0x2130:008	Event history: Internal event 7	- (Read only)	U16		HX	
0x2130:009	Event history: Internal event 8	- (Read only)	U16		HX	
0x2130:010	Event history: Internal event 9	- (Read only)	U16		HX	
0x2130:011	Event history: Internal event 10	- (Read only)	U16		HX	
0x2130:012	Event history: Internal event 11	- (Read only)	U16		HX	
0x2130:013	Event history: Internal event 12	- (Read only)	U16		HX	
0x2130:014	Event history: Internal event 13	- (Read only)	U16		HX	
0x2130:015	Event history: Internal event 14	- (Read only)	U16		HX	
0x2130:016	Event history: Internal event 15	- (Read only)	U16		HX	
0x2130:017	Event history: Internal event 16	- (Read only)	U16		HX	
0x2131:001	Device module: ES power-on time	x s (Read only)	U32	1	X	
0x2132	ES state	- (Read only)	U16	1	X	
0x213A:001	MUT: Mute S-Bus	- (Read only)	U8		-	
0x213A:002	MUT: Mute SD-In1	- (Read only)	U8		-	
0x213A:003	MUT: Mute SD-In2	- (Read only)	U8		-	
0x213A:004	MUT: Mute SD-In3	- (Read only)	U8		-	
0x213A:005	MUT: Mute SD-In4	- (Read only)	U8		-	
0x213B:001	MUT: Password	- (Read only)	U32	1	-	
0x213B:002	MUT: Remaining time	x s (Read only)	U32	1	X	
0x213C	MUT "MUT active" - Output	- (Read only)	U8		-	
0x2300	CANopen communication	**No action/no error [0]**	U8		X	
0x2301:001	CANopen settings: Node ID	**1**	U8	1	-	
0x2301:002	CANopen settings: Baud rate	**500 kbps [5]**	U8		-	
0x2301:003	CANopen settings: Slave/Master	**Slave [0]**	U8		-	
0x2301:004	CANopen settings: Start remote delay	**3000**	U16	1	-	
0x2301:005	CANopen settings: Activate SDO2 channel	**Not active [0]**	U8		-	
0x2301:006	CANopen settings: COB-ID Configuration - PDO	**Base + node-ID [0]**	U8		-	
0x2301:007	CANopen settings: COB-ID Configuration - SDO2	**Freely configurable [1]**	U8		-	
0x2302:001	Active CANopen settings: Active node ID	- (Read only)	U8	1	X	
0x2302:002	Active CANopen settings: Active baud rate	- (Read only)	U8		X	
0x2302:003	Active CANopen settings: COB-ID Emergency telegram (EMCY)	- (Read only)	U32		HX	

Address	Name	Default setting	Data type	Factor	A	M
0x2304:001	CANopen settings: SYNC - COB-ID	**0x00000080**	U32		H	
0x2304:002	CANopen settings: Communication cyclic period	**0 µs**	U32	1	-	
0x2304:003	CANopen settings: EMCY - Inhibit time	**0.0 ms**	U16	10	-	
0x2304:004	CANopen settings: Consumer heartbeat time 1	**0x00000000**	U32		H	
0x2304:005	CANopen settings: Consumer heartbeat time 2	**0x00000000**	U32		H	
0x2304:006	CANopen settings: Consumer heartbeat time 3	**0x00000000**	U32		H	
0x2304:007	CANopen settings: Consumer heartbeat time 4	**0x00000000**	U32		H	
0x2304:020	CANopen settings: Producer heartbeat time	**0 ms**	U16	1	-	
0x2304:021	CANopen settings: Communication error	**Status -> Pre-operational [0]**	U8		-	
0x2304:031	CANopen settings: COB-ID client -> server (rx)	**0x80000641**	U32		H	
0x2304:032	CANopen settings: COB-ID server -> client (tx)	**0x800005C1**	U32		H	
0x2304:033	CANopen settings: SDO client - Node-ID	**1**	U8	1	-	
0x2304:041	CANopen settings: RPDO1 - COB-ID	**0x00000201**	U32		H	
0x2304:042	CANopen settings: RPDO1 - Transmission type	**255**	U8	1	-	
0x2304:045	CANopen settings: RPDO1 - Event timer	**100 ms**	U16	1	-	
0x2304:051	CANopen settings: RPDO2 - COB-ID	**0x80000301**	U32		H	
0x2304:052	CANopen settings: RPDO2 - Transmission type	**255**	U8	1	-	
0x2304:055	CANopen settings: RPDO2 - Event timer	**100 ms**	U16	1	-	
0x2304:061	CANopen settings: RPDO3 - COB-ID	**0x80000401**	U32		H	
0x2304:062	CANopen settings: RPDO3 - Transmission type	**255**	U8	1	-	
0x2304:065	CANopen settings: RPDO3 - Event timer	**100 ms**	U16	1	-	
0x2304:071	CANopen settings: RPDO4 - COB-ID	**0x80000501**	U32		H	
0x2304:072	CANopen settings: RPDO4 - Transmission type	**255**	U8	1	-	
0x2304:075	CANopen settings: RPDO4 - Event timer	**100 ms**	U16	1	-	
0x2304:081	CANopen settings: TPDO1 - COB-ID	**0x40000181**	U32		H	
0x2304:082	CANopen settings: TPDO1 - Transmission type	**255**	U8	1	-	
0x2304:083	CANopen settings: TPDO1 - Inhibit time	**0.0 ms**	U16	10	-	
0x2304:085	CANopen settings: TPDO1 - Event timer	**20 ms**	U16	1	-	
0x2304:091	CANopen settings: TPDO2 - COB-ID	**0xC0000281**	U32		H	
0x2304:092	CANopen settings: TPDO2 - Transmission type	**255**	U8	1	-	
0x2304:093	CANopen settings: TPDO2 - Inhibit time	**0.0 ms**	U16	10	-	
0x2304:095	CANopen settings: TPDO2 - Event timer	**0 ms**	U16	1	-	
0x2304:101	CANopen settings: TPDO3 - COB-ID	**0xC0000381**	U32		H	
0x2304:102	CANopen settings: TPDO3 - Transmission type	**255**	U8	1	-	
0x2304:103	CANopen settings: TPDO3 - Inhibit time	**0.0 ms**	U16	10	-	
0x2304:105	CANopen settings: TPDO3 - Event timer	**0 ms**	U16	1	-	
0x2304:111	CANopen settings: TPDO4 - COB-ID	**0xC0000481**	U32		H	
0x2304:112	CANopen settings: TPDO4 - Transmission type	**255**	U8	1	-	
0x2304:113	CANopen settings: TPDO4 - Inhibit time	**0.0 ms**	U16	10	-	
0x2304:115	CANopen settings: TPDO4 - Event timer	**0 ms**	U16	1	-	
0x2307	CANopen time-out status	- (Read only)	U32		HX	
0x2308	CANopen status	- (Read only)	U16		X	
0x2309	CANopen controller status	- (Read only)	U16		X	
0x230A:001	CANopen statistics: PDO1 received	- (Read only)	U16	1	X	
0x230A:002	CANopen statistics: PDO2 received	- (Read only)	U16	1	X	
0x230A:003	CANopen statistics: PDO3 received	- (Read only)	U16	1	X	
0x230A:004	CANopen statistics: POD3 recieved	- (Read only)	U16	1	X	
0x230A:005	CANopen statistics: PDO1 transmitted	- (Read only)	U16	1	X	
0x230A:006	CANopen statistics: PDO2 transmitted	- (Read only)	U16	1	X	
0x230A:007	CANopen statistics: PDO3 transmitted	- (Read only)	U16	1	X	
0x230A:008	CANopen statistics: PDO4 transmitted	- (Read only)	U16	1	X	
0x230A:009	CANopen statistics: SDO1 telegrams	- (Read only)	U16	1	X	
0x230A:010	CANopen statistics: SDO2 telegrams	- (Read only)	U16	1	X	
0x230B	CANopen error counter	- (Read only)	U16	1	X	
0x231F:001	Communication module ID: Active module ID	- (Read only)	U8		X	

Address	Name	Default setting	Data type	Factor	A	M
0x231F:002	Communication module ID: Module ID connected	- (Read only)	U8		X	
0x2360	EtherCAT communication	**No action/no error [0]**	U8		X	
0x2362:007	Active EtherCAT settings: Tx length	- (Read only)	U16	1	X	
0x2362:008	Active EtherCAT settings: Rx length	- (Read only)	U16	1	X	
0x2368	EtherCAT status	- (Read only)	U16		X	•
0x2369	EtherCAT error	- (Read only)	U16		HX	
0x2371:009	onboard EtherCAT: Interface mode	**Slave [0]**	U8		C	
0x2372:009	onboard EtherCAT - Information: Active interface mode	- (Read only)	U8		X	
0x2378	onboard EtherCAT - status	- (Read only)	U16		X	•
0x2379	onboard EtherCAT - Error	- (Read only)	U16	1	X	
0x2380	PROFINET communication	**No action/no error [0]**	U8		X	
0x2381:001	PROFINET settings: IP address	**0.0.0.0**	U32		E	
0x2381:002	PROFINET settings: Subnet	**0.0.0.0**	U32		E	
0x2381:003	PROFINET settings: Gateway	**0.0.0.0**	U32		E	
0x2381:004	PROFINET settings: Station name		STRING[240]		-	
0x2381:005	PROFINET settings: I&M1 System designation		STRING[32]		-	
0x2381:006	PROFINET settings: I&M1 Installation site		STRING[22]		-	
0x2381:007	PROFINET settings: I&M2 Installation date		STRING[16]		-	
0x2381:008	PROFINET settings: I&M3 additional information		STRING[54]		-	
0x2381:009	PROFINET settings: I&M4 signature code	"**000000000000000000000000000000000000000000000000000000000000000000000000000000000000000000000000000000000000**"	OCTET[54]		-	
0x2382:001	Active PROFINET settings: IP address	- (Read only)	U32		EX	
0x2382:002	Active PROFINET settings: Subnet	- (Read only)	U32		EX	
0x2382:003	Active PROFINET settings: Gateway	- (Read only)	U32		EX	
0x2382:004	Active PROFINET settings: Station name	- (Read only)	STRING[240]		X	
0x2382:005	Active PROFINET settings: MAC Address	- (Read only)	OCTET[6]		X	
0x2388	PROFINET status	- (Read only)	U16		HX	
0x2389:001	PROFINET error: Error 1	- (Read only)	U16		X	
0x2389:002	PROFINET error: Error 2	- (Read only)	U16		HX	
0x23A0	EtherNet/IP communication	**No action/no error [0]**	U8		X	
0x23A1:001	EtherNet/IP settings: IP address	**192.168.124.16**	U32		E	
0x23A1:002	EtherNet/IP settings: Subnet	**255.255.255.0**	U32		E	
0x23A1:003	EtherNet/IP settings: Gateway	**0.0.0.0**	U32		E	
0x23A1:004	EtherNet/IP settings: Host name		STRING[64]		-	
0x23A1:005	EtherNet/IP settings: IP configuration	**DHCP [2]**	U8		-	
0x23A1:006	EtherNet/IP settings: Multicast TTL	**1**	U8	1	-	
0x23A1:007	EtherNet/IP settings: Multicast allocation	**Default allocation [0]**	U8		-	
0x23A1:008	EtherNet/IP settings: Multicast IP address	**239.64.2.224**	U32		E	
0x23A1:009	EtherNet/IP settings: Multicast number	**1**	U8	1	-	
0x23A1:010	EtherNet/IP settings: Timeout	**10000**	U16	1	-	
0x23A2:001	Active EtherNet/IP settings: IP address	- (Read only)	U32		EX	
0x23A2:002	Active EtherNet/IP settings: Subnet	- (Read only)	U32		EX	
0x23A2:003	Active EtherNet/IP settings: Gateway	- (Read only)	U32		EX	
0x23A2:005	Active EtherNet/IP settings: MAC address	- (Read only)	OCTET[6]		X	
0x23A2:006	Active EtherNet/IP settings: Multicast address	- (Read only)	U32		EX	
0x23A4:001	Port 1	**Auto-Negotiation [0]**	U16		-	
0x23A4:002	Port 2	**Auto-Negotiation [0]**	U16		-	
0x23A5:001	Active port settings: Port 1 (X266)	- (Read only)	U16		X	
0x23A5:002	Active port settings: Port 2 (X267)	- (Read only)	U16		X	
0x23A7	Address conflict detection	**Enabled [1]**	U8		-	
0x23A8	CIP module status	- (Read only)	U16		X	
0x23A9	EtherNet/IP status	- (Read only)	U16		X	

Address	Name	Default setting	Data type	Factor	A	M
0x243C:001	Device: Ethernet commands: Device: Start firmware update	**Off / ready [0]**	U8		CX	
0x2450	Engineering port control	**No action/No error [0]**	U8		X	
0x2451:001	Engineering port settings: IP address	**0.0.0.0**	U32		E	
0x2451:002	Engineering port settings: Subnet	**0.0.0.0**	U32		E	
0x2451:003	Engineering port settings: Gateway	**0.0.0.0**	U32		E	
0x2451:004	Engineering port settings: DHCP	**Enabled [1]**	U8		-	
0x2451:007	Engineering port settings: DNS server address	**0.0.0.0**	U32		E	
0x2452:001	Active engineering port settings: IP address	- (Read only)	U32		EX	
0x2452:002	Active engineering port settings: Subnet	- (Read only)	U32		EX	
0x2452:003	Active engineering port settings: Gateway	- (Read only)	U32		EX	
0x2452:004	Active engineering port settings: DHCP	- (Read only)	U8		X	
0x2452:005	Active engineering port settings: MAC address	- (Read only)	OCTET[6]		X	
0x2452:006	Active engineering port settings: Link status	- (Read only)	U8		X	
0x2452:007	Active engineering port settings: DNS server address	- (Read only)	U32		EX	
0x245A:001	NTP server addresses: Activate NTP server addresses	**No action/no error [0]**	U8		X	
0x245A:002	NTP server addresses: NTP server address 1	**0.0.0.0**	U32		E	
0x245A:003	NTP server addresses: NTP server address 2	**0.0.0.0**	U32		E	
0x245A:004	NTP server addresses: NTP server address 3	**0.0.0.0**	U32		E	
0x245A:005	NTP server addresses: NTP server address 4	**0.0.0.0**	U32		E	
0x245A:006	NTP server addresses: NTP server name 1		STRING[253]		-	
0x245A:007	NTP server addresses: NTP server name 2		STRING[253]		-	
0x245A:008	NTP server addresses: NTP server name 3		STRING[253]		-	
0x245A:009	NTP server addresses: NTP server name 4		STRING[253]		-	
0x245B:001	System time: Time base	**NTP [0]**	U8		-	
0x245B:002	System time: Current time	**ns**	U64	1	TX	
0x24E7:001	Network input data: Input data 1		U32	1	X	
0x24E7:002	Network input data: Input data 2		U32	1	X	
0x24E7:003	Network input data: Input data 3		U32	1	X	
0x24E7:004	Network input data: Input data 4		U32	1	X	
0x24E7:005	Network input data: Input data 5		U32	1	X	
0x24E7:006	Network input data: Input data 6		U32	1	X	
0x24E7:007	Network input data: Input data 7		U32	1	X	
0x24E7:008	Network input data: Input data 8		U32	1	X	
0x24E7:009	Network input data: Input data 9		U32	1	X	
0x24E7:010	Network input data: Input data 10		U32	1	X	
0x24E7:011	Network input data: Input data 11		U32	1	X	
0x24E7:012	Network input data: Input data 12		U32	1	X	
0x24E7:013	Network input data: Input data 13		U32	1	X	
0x24E7:014	Network input data: Input data 14		U32	1	X	
0x24E7:015	Network input data: Input data 15		U32	1	X	
0x24E7:016	Network input data: Input data 16		U32	1	X	
0x24E8:001	Network output data: Output data 1	- (Read only)	U32	1	X	
0x24E8:002	Network output data: Output data 2	- (Read only)	U32	1	X	
0x24E8:003	Network output data: Output data 3	- (Read only)	U32	1	X	
0x24E8:004	Network output data: Output data 4	- (Read only)	U32	1	X	
0x24E8:005	Network output data: Output data 5	- (Read only)	U32	1	X	
0x24E8:006	Network output data: Output data 6	- (Read only)	U32	1	X	
0x24E8:007	Network output data: Output data 7	- (Read only)	U32	1	X	
0x24E8:008	Network output data: Output data 8	- (Read only)	U32	1	X	
0x24E8:009	Network output data: Output data 9	- (Read only)	U32	1	X	
0x24E8:010	Network output data: Output data 10	- (Read only)	U32	1	X	
0x24E8:011	Network output data: Output data 11	- (Read only)	U32	1	X	
0x24E8:012	Network output data: Output data 12	- (Read only)	U32	1	X	

Address	Name	Default setting	Data type	Factor	A	M
0x24E8:013	Network output data: Output data 13	- (Read only)	U32	1	X	
0x24E8:014	Network output data: Output data 14	- (Read only)	U32	1	X	
0x24E8:015	Network output data: Output data 15	- (Read only)	U32	1	X	
0x24E8:016	Network output data: Output data 16	- (Read only)	U32	1	X	
0x2500	Touch probe filter time	**0 µs**	U16	1	-	
0x2539:001	Hardware-Diagnose: External supply voltage	x.x V (Read only)	U16	10	X	
0x2539:002	Hardware-Diagnose: Control board temperature	x.x °C (Read only)	I16	10	X	
0x2540:001	Mains settings: Rated mains voltage	**400 Veff [1]**	U8		-	
0x2540:002	Mains settings: Undervoltage warning threshold	**430 V**	U16	1	-	
0x2540:003	Mains settings: Undervoltage error threshold	x V (Read only)	U16	1	X	
0x2540:004	Mains settings: Undervoltage reset threshold	x V (Read only)	U16	1	X	
0x2540:005	Mains settings: Overvoltage warning threshold	**795 V**	U16	1	-	
0x2540:006	Mains settings: Overvoltage error threshold	x V (Read only)	U16	1	X	
0x2540:007	Mains settings: Overvoltage reset threshold	x V (Read only)	U16	1	X	
0x2540:008	Mains settings: DC link voltage critical	- (Read only)	U8	1	X	•
0x2541:003	Brake energy management: Reduced threshold	**0 V**	U16	1	-	
0x2550:001	Brake resistor: Minimum resistance	x.x Ω (Read only)	U16	10	X	
0x2550:002	Brake resistor: Resistance value	**180.0 Ω**	U16	10	-	
0x2550:003	Brake resistor: Rated power	**5600 W**	U32	1	-	
0x2550:004	Brake resistor: Maximum thermal load	**485 kWs**	U32	1	-	
0x2550:006	Brake resistor: Reference resistance	**Minimum resistance [0]**	U8		-	
0x2550:007	Brake resistor: Thermal load	x.x % (Read only)	U16	10	X	
0x2550:008	Brake resistor: Warning threshold	**90.0 %**	U16	10	-	
0x2550:010	Brake resistor: Response to warning	**Warning [2]**	U8		-	
0x2550:011	Brake resistor: Response to error	**No response [0]**	U8		-	
0x2580:001	Distributed Clocks: Real time status	- (Read only)	U8		X	
0x2580:002	Distributed Clocks: First setting time	x ns (Read only)	U64	1	TX	
0x2580:003	Distributed Clocks: Newest setting time	x ns (Read only)	U64	1	TX	
0x2580:004	Distributed Clocks: Current time	x ns (Read only)	U64	1	TX	
0x2590:003	Energy saving: State of actual energy saving mode	- (Read only)	U8		HX	
0x261C:001	Favorites settings: Parameter 1		U32	1	-	
0x261C:002	Favorites settings: Parameter 2		U32	1	-	
0x261C:003	Favorites settings: Parameter 3		U32	1	-	
0x261C:004	Favorites settings: Parameter 4		U32	1	-	
0x261C:005	Favorites settings: Parameter 5		U32	1	-	
0x261C:006	Favorites settings: Parameter 6		U32	1	-	
0x261C:007	Favorites settings: Parameter 7		U32	1	-	
0x261C:008	Favorites settings: Parameter 8		U32	1	-	
0x261C:009	Favorites settings: Parameter 9		U32	1	-	
0x261C:010	Favorites settings: Parameter 10		U32	1	-	
0x261C:011	Favorites settings: Parameter 11		U32	1	-	
0x261C:012	Favorites settings: Parameter 12		U32	1	-	
0x261C:013	Favorites settings: Parameter 13		U32	1	-	
0x261C:014	Favorites settings: Parameter 14		U32	1	-	
0x261C:015	Favorites settings: Parameter 15		U32	1	-	
0x261C:016	Favorites settings: Parameter 16		U32	1	-	
0x261C:017	Favorites settings: Parameter 17		U32	1	-	
0x261C:018	Favorites settings: Parameter 18		U32	1	-	
0x261C:019	Favorites settings: Parameter 19		U32	1	-	
0x261C:020	Favorites settings: Parameter 20		U32	1	-	
0x261C:021	Favorites settings: Parameter 21		U32	1	-	
0x261C:022	Favorites settings: Parameter 22		U32	1	-	
0x261C:023	Favorites settings: Parameter 23		U32	1	-	
0x261C:024	Favorites settings: Parameter 24		U32	1	-	
0x261C:025	Favorites settings: Parameter 25		U32	1	-	

Address	Name	Default setting	Data type	Factor	A	M
0x261C:026	Favorites settings: Parameter 26		U32	1	-	
0x261C:027	Favorites settings: Parameter 27		U32	1	-	
0x261C:028	Favorites settings: Parameter 28		U32	1	-	
0x261C:029	Favorites settings: Parameter 29		U32	1	-	
0x261C:030	Favorites settings: Parameter 30		U32	1	-	
0x261C:031	Favorites settings: Parameter 31		U32	1	-	
0x261C:032	Favorites settings: Parameter 32		U32	1	-	
0x261C:033	Favorites settings: Parameter 33		U32	1	-	
0x261C:034	Favorites settings: Parameter 34		U32	1	-	
0x261C:035	Favorites settings: Parameter 35		U32	1	-	
0x261C:036	Favorites settings: Parameter 36		U32	1	-	
0x261C:037	Favorites settings: Parameter 37		U32	1	-	
0x261C:038	Favorites settings: Parameter 38		U32	1	-	
0x261C:039	Favorites settings: Parameter 39		U32	1	-	
0x261C:040	Favorites settings: Parameter 40		U32	1	-	
0x261C:041	Favorites settings: Parameter 41		U32	1	-	
0x261C:042	Favorites settings: Parameter 42		U32	1	-	
0x261C:043	Favorites settings: Parameter 43		U32	1	-	
0x261C:044	Favorites settings: Parameter 44		U32	1	-	
0x261C:045	Favorites settings: Parameter 45		U32	1	-	
0x261C:046	Favorites settings: Parameter 46		U32	1	-	
0x261C:047	Favorites settings: Parameter 47		U32	1	-	
0x261C:048	Favorites settings: Parameter 48		U32	1	-	
0x261C:049	Favorites settings: Parameter 49		U32	1	-	
0x261C:050	Favorites settings: Parameter 50		U32	1	-	
0x2632:001	Inversion of digital inputs: Digital input 1	**Not inverted [0]**	U8		-	
0x2632:002	Inversion of digital inputs: Digital input 2	**Not inverted [0]**	U8		-	
0x2632:003	Inversion of digital inputs: Digital input 3	**Not inverted [0]**	U8		-	
0x2632:004	Inversion of digital inputs: Digital input 4	**Not inverted [0]**	U8		-	
0x2632:005	Inversion of digital inputs: Digital input 5	**Not inverted [0]**	U8		-	
0x2632:006	Inversion of digital inputs: Digital input 6	**Not inverted [0]**	U8		-	
0x2632:007	Inversion of digital inputs: Digital input 7	**Not inverted [0]**	U8		-	
0x2632:008	Inversion of digital inputs: Digital input 8	**Not inverted [0]**	U8		-	
0x2632:009	Inversion of digital inputs: Digital input 9	**Not inverted [0]**	U8		-	
0x2633:001	Digital input debounce time: Digital input 1	**0 ms**	U8	1	-	
0x2633:002	Digital input debounce time: Digital input 2	**0 ms**	U8	1	-	
0x2633:003	Digital input debounce time: Digital input 3	**0 ms**	U8	1	-	
0x2633:004	Digital input debounce time: Digital input 4	**0 ms**	U8	1	-	
0x2633:005	Digital input debounce time: Digital input 5	**0 ms**	U8	1	-	
0x2633:006	Digital input debounce time: Digital input 6	**0 ms**	U8	1	-	
0x2633:007	Digital input debounce time: Digital input 7	**0 ms**	U8	1	-	
0x2633:008	Digital input debounce time: Digital input 8	**0 ms**	U8	1	-	
0x2633:009	Digital input debounce time: Digital input 9	**0 ms**	U8	1	-	
0x2634:002	Digital outputs function: Digital output 1	**Signal from application [10]**	U8		-	
0x2635:002	Inversion of digital outputs: Digital output 1	**Not inverted [0]**	U8		-	
0x2635:003	Inversion of digital outputs: Digital output 2	**Not inverted [0]**	U8		-	
0x2635:004	Inversion of digital outputs: Digital output 3	**Not inverted [0]**	U8		-	
0x2635:005	Inversion of digital outputs: Digital output 4	**Not inverted [0]**	U8		-	
0x2635:006	Inversion of digital outputs: Digital output 5	**Not inverted [0]**	U8		-	
0x2635:007	Inversion of digital outputs: Digital output 6	**Not inverted [0]**	U8		-	
0x2636:001	Analog input 1: Input range	**0 ... 10 VDC [0]**	U8		-	
0x2636:006	Analog input 1: Filter time	**10 ms**	U16	1	-	
0x2636:007	Analog input 1: Dead band	**0.0 %**	U16	10	-	
0x2636:010	Analog input 1: Error response	**No response [0]**	U8		-	
0x2636:013	Analog input 1: Minimum value for scaling	**0.0 %**	I16	10	-	

Address	Name	Default setting	Data type	Factor	A	M
0x2636:014	Analog input 1: Maximum value for scaling	**100.0 %**	I16	10	-	
0x263B:001	Digital inputs internal control: Activation	**Off [0]**	U8		X	
0x263B:002	Digital inputs internal control: DI1 internal control	**Off [0]**	U8		X	
0x263B:003	Digital inputs internal control: DI2 internal control	**Off [0]**	U8		X	
0x263B:004	Digital inputs internal control: DI3 internal control	**Off [0]**	U8		X	
0x263B:005	Digital inputs internal control: DI4 internal control	**Off [0]**	U8		X	
0x263B:006	Digital inputs internal control: DI5 internal control	**Off [0]**	U8		X	
0x263B:007	Digital inputs internal control: DI6 internal control	**Off [0]**	U8		X	
0x263B:008	Digital inputs internal control: DI7 internal control	**Off [0]**	U8		X	
0x263B:009	Digital inputs internal control: DI8 internal control	**Off [0]**	U8		X	
0x263B:010	Digital inputs internal control: DI9 internal control	**Off [0]**	U8		X	
0x263C:001	Digital outputs internal control: Activation	**Off [0]**	U8		X	
0x263C:002	Digital outputs internal control: DO1 internal control	**Off [0]**	U8		X	
0x263C:003	Digital outputs internal control: DO2 internal control	**Off [0]**	U8		X	
0x263C:004	Digital outputs internal control: DO3 internal control	**Off [0]**	U8		X	
0x263C:005	Digital outputs internal control: DO4 internal control	**Off [0]**	U8		X	
0x263C:006	Digital outputs internal control: DO5 internal control	**Off [0]**	U8		X	
0x263C:007	Digital outputs internal control: DO6 internal control	**Off [0]**	U8		X	
0x263D:001	Analog inputs internal control: Activation	**Off [0]**	U8		X	
0x263D:002	Analog inputs internal control: AI1 internal control	**100.00 %**	I16	100	X	
0x2820:001	Holding brake control: Brake mode	**Off [2]**	U8		-	●
0x2820:002	Holding brake control: Brake closing time	**100 ms**	U16	1	-	
0x2820:003	Holding brake control: Brake opening time	**100 ms**	U16	1	-	
0x2820:004	Holding brake control: Brake detection	- (Read only)	U16		X	
0x2820:005	Holding brake control: Brake polarity	**Normal [0]**	U8		-	
0x2820:006	Holding brake control: Brake error response	**Fault > CiA402 [1]**	U8		-	
0x2820:009	Holding brake control: Starting torque source	**Torque in 0x2820:010 [1]**	U16		-	
0x2820:010	Holding brake control: Starting torque	**0.0 %**	I16	10	-	●
0x2820:011	Holding brake control: Override of the brake control	**No override active [0]**	U8		X	●
0x2820:013	Holding brake control: Holding load ramptime	**0 ms**	U16	1	-	
0x2820:015	Holding brake control: Brake status	- (Read only)	U8		X	
0x2820:019	Holding brake control: Brake opening time test signal	**500 ms**	U16	1	X	
0x2820:020	Holding brake control: Brake control word	**0x00**	U8		HX	
0x2820:021	Holding brake control: Detected actual torque	x.x % (Read only)	I16	10	X	
0x2820:022	Holding brake control: Holding brake supply voltage	**No reduction [100]**	U8		-	
0x2820:023	Holding brake control: Control configuration	**Via internal brake module [0]**	U8		-	
0x2822:001	Axis commands: Enable inverter	**Inverter enabled [1]**	U8		X	
0x2822:003	Axis commands: Reset error	**Off/Ready [0]**	U8		X	
0x2822:021	Axis commands: Load default Lh saturation characteristic	**Off/Ready [0]**	U8		X	
0x2822:022	Axis commands: Load default inverter characteristic	**Off/Ready [0]**	U8		X	
0x2822:023	Axis commands: Estimate optimum magnetizing current	**Off/Ready [0]**	U8		X	
0x2822:024	Axis commands: Estimate basic motor parameters based on rated data	**Off/Ready [0]**	U8		X	
0x2822:025	Axis commands: Get motor encoder characteristic (resolver)	**Off/Ready [0]**	U8		X	
0x2822:026	Axis commands: Get motor encoder information (HIPERFACE®)	**Off/Ready [0]**	U8		X	
0x2822:029	Axis commands: Get load encoder/master encoder characteristic (resolver)	**Off/Ready [0]**	U8		X	
0x2822:030	Axis commands: Get load encoder/master encoder information (HIPERFACE®)	**Off/Ready [0]**	U8		X	
0x2822:037	Axis commands: Estimate all motor parameters based on rated data	**Off/Ready [0]**	U8		X	

Address	Name	Default setting	Data type	Factor	A	M
0x2822:038	Axis commands: HIPERFACE (A): Set position with synchronization	**Off/Ready [0]**	U8		X	
0x2822:039	Axis commands: HIPERFACE (A): Set position with synchronization	**Off/Ready [0]**	U8		X	
0x2823	Status of axis commands	- (Read only)	U8	1	X	
0x2824	Control via PDO/Application	**On [1]**	U8		CX	
0x2825	Drive mode selection	**CiA402 operating modes [0]**	U8		CX	
0x2826	Timeout for error response	**4 s**	U32	1	-	
0x282A:001	Status words: Cause of disable	- (Read only)	U32		HX	●
0x282A:004	Status words: Extended status word	- (Read only)	U16		HX	●
0x282C:001	I/O diagnostic: Application level of the digital inputs	- (Read only)	U32		HX	●
0x282C:002	I/O diagnostic: Digital output levels	- (Read only)	U32		HX	●
0x2830	Inverter control word	**0x0000**	U16		HX	●
0x2831	Inverter status word	- (Read only)	U16		HX	●
0x2832	Identification status	- (Read only)	U16		HX	
0x2833	Inverter status word 2	- (Read only)	U16		HX	●
0x2835:001	Manual test mode: Current setpoint	**0 %**	I16	1	X	●
0x2835:002	Manual test mode: Frequency	**0.0 Hz**	I16	10	X	●
0x2835:003	Manual test mode: Starting angle	**0.0 °**	I16	10	X	
0x2836:001	Manual control mode: Current setpoint	**30 %**	U16	1	X	●
0x2836:002	Manual control mode: Frequency	**0.0 Hz**	I16	10	X	●
0x2836:003	Manual control mode: Ramp time (current)	**0 ms**	U16	1	-	
0x2836:004	Manual control mode: Ramp time (frequency)	**500 ms**	U16	1	-	
0x2836:005	Manual control mode: Time monitoring (frequency)	**2500 ms**	U32	1	-	
0x2836:006	Manual control mode: Current controller gain	**20.00 V/A**	U32	100	-	
0x2836:007	Manual control mode: Current controller reset time	**20.00 ms**	U32	100	-	
0x2840	Error reset time	x ms (Read only)	I32	1	X	
0x2841	Reset error	**0**	U8	1	X	
0x284F	Current error	- (Read only)	OCTET[64]		X	
0x2857:001	CANopen monitoring: RPDO1-Timeout	**Warning [2]**	U8		-	
0x2857:002	CANopen monitoring: RPDO2-Timeout	**Warning [2]**	U8		-	
0x2857:003	CANopen monitoring: RPDO3-Timeout	**Warning [2]**	U8		-	
0x2857:004	CANopen monitoring: RPDO4-Timeout	**Warning [2]**	U8		-	
0x2857:005	CANopen monitoring: Heartbeat-Timeout Consumer 1	**Warning [2]**	U8		-	
0x2857:006	CANopen monitoring: Heartbeat-Timeout Consumer 2	**Warning [2]**	U8		-	
0x2857:007	CANopen monitoring: Heartbeat-Timeout Consumer 3	**Warning [2]**	U8		-	
0x2857:008	CANopen monitoring: Heartbeat-Timeout Consumer 4	**Warning [2]**	U8		-	
0x2857:010	CANopen monitoring: "Bus-off" state change	**Warning [2]**	U8		-	
0x2857:011	CANopen monitoring: Warning	**Warning [2]**	U8		-	
0x2859:001	Network monitoring: Watchdog elapsed	**Warning [2]**	U8		-	
0x2859:002	Network monitoring: Data exchange exited	**No response [0]**	U8		-	
0x2859:003	Network monitoring: Invalid configuration	**Warning [2]**	U8		-	
0x2859:004	Network monitoring: Initialisation error	**Warning [2]**	U8		-	
0x2859:005	Network monitoring: Invalid process data	**Warning [2]**	U8		-	
0x2859:006	Network monitoring: Time-out explicit message	**Warning [2]**	U8		-	
0x2859:007	Network monitoring: Timeout communication	**Warning [2]**	U8		-	
0x285A:001	Diagnostic configuration: Alarm suppression	**0x0000**	U16		H	
0x285B:001	onboard EtherCAT monitoring: Watchdog elapsed	**Fault > CiA402 [1]**	U8		-	
0x285B:002	onboard EtherCAT monitoring: EtherCAT role check	**Warning [2]**	U8		-	
0x2870:001	SafetyInterface: Control	- (Read only)	U32		HX	●
0x2870:002	SafetyInterface: State	- (Read only)	U32		HX	●
0x2870:003	SafetyInterface: IO State	- (Read only)	U32		HX	●

Address	Name	Default setting	Data type	Factor	A	M
0x2871:001	SafetyInterface bits: STO active	- (Read only)	BOOLEAN	1	X	●
0x2871:002	SafetyInterface bits: SS1 active	- (Read only)	BOOLEAN	1	X	●
0x2871:003	SafetyInterface bits: SS2 active	- (Read only)	BOOLEAN	1	X	●
0x2871:004	SafetyInterface bits: SOS active	- (Read only)	BOOLEAN	1	X	●
0x2871:005	SafetyInterface bits: SLS1 active	- (Read only)	BOOLEAN	1	X	●
0x2871:006	SafetyInterface bits: SLS2 active	- (Read only)	BOOLEAN	1	X	●
0x2871:007	SafetyInterface bits: SLS3 active	- (Read only)	BOOLEAN	1	X	●
0x2871:008	SafetyInterface bits: SLS4 active	- (Read only)	BOOLEAN	1	X	●
0x2871:009	SafetyInterface bits: SDIpos active	- (Read only)	BOOLEAN	1	X	●
0x2871:010	SafetyInterface bits: SDIneg active	- (Read only)	BOOLEAN	1	X	●
0x2871:011	SafetyInterface bits: SLI active	- (Read only)	BOOLEAN	1	X	●
0x2871:012	SafetyInterface bits: SSE active	- (Read only)	BOOLEAN	1	X	●
0x2871:013	SafetyInterface bits: ES active	- (Read only)	BOOLEAN	1	X	●
0x2871:014	SafetyInterface bits: OMS active	- (Read only)	BOOLEAN	1	X	●
0x2871:015	SafetyInterface bits: RMS active	- (Read only)	BOOLEAN	1	X	●
0x2871:016	SafetyInterface bits: SBC active	- (Read only)	BOOLEAN	1	X	●
0x2871:017	SafetyInterface bits: MUT active	- (Read only)	BOOLEAN	1	X	●
0x2871:033	SafetyInterface bits: SLS1 observed	- (Read only)	BOOLEAN	1	X	●
0x2871:034	SafetyInterface bits: SLS2 observed	- (Read only)	BOOLEAN	1	X	●
0x2871:035	SafetyInterface bits: SLS3 observed	- (Read only)	BOOLEAN	1	X	●
0x2871:036	SafetyInterface bits: SLS4 observed	- (Read only)	BOOLEAN	1	X	●
0x2871:037	SafetyInterface bits: SMS observed	- (Read only)	BOOLEAN	1	X	●
0x2871:038	SafetyInterface bits: SSM within limits	- (Read only)	BOOLEAN	1	X	●
0x2871:039	SafetyInterface bits: SDIpos observed	- (Read only)	BOOLEAN	1	X	●
0x2871:040	SafetyInterface bits: SDIneg observed	- (Read only)	BOOLEAN	1	X	●
0x2871:041	SafetyInterface bits: SLP1 observed	- (Read only)	BOOLEAN	1	X	●
0x2871:042	SafetyInterface bits: SLP2 observed	- (Read only)	BOOLEAN	1	X	●
0x2871:043	SafetyInterface bits: SLP3 observed	- (Read only)	BOOLEAN	1	X	●
0x2871:044	SafetyInterface bits: SLP4 observed	- (Read only)	BOOLEAN	1	X	●
0x2871:045	SafetyInterface bits: SCA1 within limits	- (Read only)	BOOLEAN	1	X	●
0x2871:046	SafetyInterface bits: SCA2 within limits	- (Read only)	BOOLEAN	1	X	●
0x2871:047	SafetyInterface bits: SCA3 within limits	- (Read only)	BOOLEAN	1	X	●
0x2871:048	SafetyInterface bits: SCA4 within limits	- (Read only)	BOOLEAN	1	X	●
0x2871:049	SafetyInterface bits: PDSSpos observed	- (Read only)	BOOLEAN	1	X	●
0x2871:050	SafetyInterface bits: PDSSneg observed	- (Read only)	BOOLEAN	1	X	●
0x2871:051	SafetyInterface bits: SOS observed	- (Read only)	BOOLEAN	1	X	●
0x2871:052	SafetyInterface bits: SBC activated	- (Read only)	BOOLEAN	1	X	●
0x2871:053	SafetyInterface bits: SHom active	- (Read only)	BOOLEAN	1	X	●
0x2871:054	SafetyInterface bits: SHom available	- (Read only)	BOOLEAN	1	X	●
0x2871:055	SafetyInterface bits: Safe speed OK	- (Read only)	BOOLEAN	1	X	●
0x2871:056	SafetyInterface bits: n=0	- (Read only)	BOOLEAN	1	X	●
0x2871:057	SafetyInterface bits: Positive direction	- (Read only)	BOOLEAN	1	X	●
0x2871:058	SafetyInterface bits: Slip > 25%	- (Read only)	BOOLEAN	1	X	
0x2871:059	SafetyInterface bits: Slip > 50%	- (Read only)	BOOLEAN	1	X	
0x2871:060	SafetyInterface bits: Slip > 75%	- (Read only)	BOOLEAN	1	X	
0x2871:064	SafetyInterface bits: Error active	- (Read only)	BOOLEAN	1	X	●
0x2871:073	SafetyInterface bits: AIS S-Bus	- (Read only)	BOOLEAN	1	X	
0x2871:074	SafetyInterface bits: AIE S-Bus	- (Read only)	BOOLEAN	1	X	
0x2871:075	SafetyInterface bits: SHom_Start S-Bus	- (Read only)	BOOLEAN	1	X	
0x2871:076	SafetyInterface bits: SHom_Load S-Bus	- (Read only)	BOOLEAN	1	X	
0x2874	S-Bus control data	- (Read only)	U32		HX	
0x2875:001	S-Bus control bits: STO	- (Read only)	BOOLEAN	1	X	●
0x2875:002	S-Bus control bits: SS1	- (Read only)	BOOLEAN	1	X	●
0x2875:003	S-Bus control bits: SS2	- (Read only)	BOOLEAN	1	X	●
0x2875:004	S-Bus control bits: SLS1	- (Read only)	BOOLEAN	1	X	●

Address	Name	Default setting	Data type	Factor	A	M
0x2875:005	S-Bus control bits: SLS2	- (Read only)	BOOLEAN	1	X	●
0x2875:006	S-Bus control bits: SLS3	- (Read only)	BOOLEAN	1	X	●
0x2875:007	S-Bus control bits: SLS4	- (Read only)	BOOLEAN	1	X	●
0x2875:008	S-Bus control bits: SDIpos	- (Read only)	BOOLEAN	1	X	●
0x2875:009	S-Bus control bits: SDIneg	- (Read only)	BOOLEAN	1	X	●
0x2875:010	S-Bus control bits: ES	- (Read only)	BOOLEAN	1	X	●
0x2875:011	S-Bus control bits: SLI	- (Read only)	BOOLEAN	1	X	●
0x2875:012	S-Bus control bits: OMS	- (Read only)	BOOLEAN	1	X	●
0x2875:013	S-Bus control bits: SLP1	- (Read only)	BOOLEAN	1	X	●
0x2875:014	S-Bus control bits: SLP2	- (Read only)	BOOLEAN	1	X	●
0x2875:015	S-Bus control bits: SLP3	- (Read only)	BOOLEAN	1	X	●
0x2875:016	S-Bus control bits: SLP4	- (Read only)	BOOLEAN	1	X	●
0x2875:017	S-Bus control bits: AIS	- (Read only)	BOOLEAN	1	X	●
0x2875:018	S-Bus control bits: AIE	- (Read only)	BOOLEAN	1	X	●
0x2875:019	S-Bus control bits: SOS	- (Read only)	BOOLEAN	1	X	●
0x2875:020	S-Bus control bits: RMS	- (Read only)	BOOLEAN	1	X	●
0x2875:021	S-Bus control bits: SHom_Start	- (Read only)	BOOLEAN	1	X	●
0x2875:022	S-Bus control bits: SHom_Load	- (Read only)	BOOLEAN	1	X	●
0x2875:023	S-Bus control bits: PDSS	- (Read only)	BOOLEAN	1	X	●
0x2875:024	S-Bus control bits: SSE	- (Read only)	BOOLEAN	1	X	●
0x2875:026	S-Bus control bits: SBC	- (Read only)	BOOLEAN	1	X	●
0x2878:001	Motor encoder (ES): System	- (Read only)	U8		-	
0x2878:002	Motor encoder (ES): SinCos encoder PPR	- (Read only)	U16	1	-	
0x2878:003	Motor encoder (ES): Number of resolver pole pairs	- (Read only)	U8	1	-	
0x2878:004	Motor encoder (ES): Response time encoder monitoring	ms (Read only)	U8		-	
0x2878:050	Motor encoder (ES): HDSL driver state	- (Read only)	U16		HX	
0x2878:051	Motor encoder (ES): HDSL online status 1	- (Read only)	U16		HX	
0x2878:052	Motor encoder (ES): HDSL online status 2	- (Read only)	U16		HX	
0x2878:053	Motor encoder (ES): HDSL Safe summary	- (Read only)	U8		HX	
0x2878:054	Motor encoder (ES): HDSL Safe Channel 2 status	- (Read only)	U8		HX	
0x2878:055	Motor encoder (ES): HDSL encoder status ENC_ST0 (ES)	- (Read only)	U8		HX	
0x2878:056	Motor encoder (ES): HDSL encoder status ENC_ST1 (ES)	- (Read only)	U8		HX	
0x2878:057	Motor encoder (ES): HDSL encoder status ENC_ST2 (ES)	- (Read only)	U8		HX	
0x2878:058	Motor encoder (ES): HDSL encoder status ENC_ST3 (ES)	- (Read only)	U8		HX	
0x2878:059	Motor encoder (ES): HDSL encoder status ENC_ST4 (ES)	- (Read only)	U8		HX	
0x2878:060	Motor encoder (ES): HDSL encoder status ENC_ST5 (ES)	- (Read only)	U8		HX	
0x2878:061	Motor encoder (ES): HDSL encoder status ENC_ST6 (ES)	- (Read only)	U8		HX	
0x2878:062	Motor encoder (ES): HDSL encoder status ENC_ST7 (ES)	- (Read only)	U8		HX	
0x2879:001	Mechanical data: Motor mounting direction	- (Read only)	U8		-	
0x287A:001	Load encoder (ES): System	- (Read only)	U8		-	
0x287A:003	Load encoder (ES): Gear numerator	- (Read only)	U16	1	-	
0x287A:004	Load encoder (ES): Gear denominator	- (Read only)	U16	1	-	
0x287A:005	Load encoder (ES): Mounting direction	- (Read only)	U8		-	
0x287A:006	Load encoder (ES): Position	**0 incr.**	I32	1	X	●
0x287A:007	Load encoder (ES): Position status	**Invalid [0]**	U8		X	●
0x287A:008	Load encoder (ES): Additional gear numerator	- (Read only)	U32	1	-	
0x287A:009	Load encoder (ES): Additional gear denominator	- (Read only)	U32	1	-	

Address	Name	Default setting	Data type	Factor	A	M
0x287B:001	Speed: Tolerance window (n=0)	x rpm (Read only)	U16	1	-	
0x287B:002	Speed: Tolerance speed comparison	x rpm (Read only)	U16	1	-	
0x287B:003	Speed: Current speed n_safe	x rpm (Read only)	I16	1	X	●
0x287B:004	Speed: Internal current speed nSD	x rpm (Read only)	I16	1	X	
0x287B:005	Speed: Internal current speed nBD	x rpm (Read only)	I16	1	X	
0x287B:006	Speed: Current speed difference nSD-nBD	x rpm (Read only)	I16	1	X	
0x287C:001	Position: Tolerance position comparison	x incr. (Read only)	I32	1	-	
0x287C:002	Position: Current position p_safe	x incr. (Read only)	I32	1	X	●
0x287C:003	Position: Internal current position pSD	x incr. (Read only)	I32	1	X	
0x287C:004	Position: Internal current position pBD	x incr. (Read only)	I32	1	X	
0x287C:005	Position: Current position difference pSD-pBD	x incr. (Read only)	I32	1	X	
0x2880:001	SHom_Start: Source	- (Read only)	U8		-	
0x2880:002	SHom_Start: IRS edge trigger	- (Read only)	U8		-	
0x2881:001	SHom_Load: Source	- (Read only)	U8		-	
0x2881:002	SHom_Load: IRL edge trigger	- (Read only)	U8		-	
0x2882:001	SHom: Home position	x incr. (Read only)	I32	1	-	
0x2882:002	SHom: Timeout	x ms (Read only)	U16	1	-	
0x2882:003	SHom: SLS for homing	- (Read only)	U8		-	
0x2882:004	SHom: Restart condition	- (Read only)	U8		-	
0x2882:005	SHom: Starting position tolerance	x incr. (Read only)	I32	1	-	
0x2882:006	SHom: Status	- (Read only)	U8		X	
0x2882:007	SHom: Saved position	x incr. (Read only)	I32	1	X	
0x2883	SHom Source diagnostic positions	- (Read only)	U8		-	
0x2884:001	SHom: Level diagnostic positions	- (Read only)	U8		-	
0x2884:002	SHom: Lower diagnostic position	x incr. (Read only)	I32	1	-	
0x2884:003	SHom: Upper diagnostic position	x incr. (Read only)	I32	1	-	
0x2884:004	SHom: Tolerance diagnostic positions	x incr. (Read only)	I32	1	-	
0x2884:005	SHom: Error response diagnostic positions	- (Read only)	U8		-	
0x2884:006	SHom: Current difference diagnostic position	x incr. (Read only)	I32	1	X	
0x2885:001	SHom: Maximum compensated slip	x incr. (Read only)	I32	1	-	
0x2885:002	SHom: End area slip compensation	- (Read only)	U8		-	
0x2886	SHom "SHom active" - Output	- (Read only)	U8		-	
0x2887	SHom "SHom available" - Output	- (Read only)	U8		-	
0x2890	STO Source SD-In	- (Read only)	U8		-	
0x2891	STO Source S-Bus	- (Read only)	U8		-	
0x2892:001	STO: Restart	- (Read only)	U8		-	
0x2893	STO "STO active" - Output	- (Read only)	U8		-	
0x2894:001	SS1, SS2: Stopping time	x ms (Read only)	U16	1	-	
0x2894:002	SS1, SS2: Ramp monitoring	- (Read only)	U8		-	
0x2894:003	SS1, SS2: Ramp - Smoothing time	x % (Read only)	U8	1	-	
0x2894:004	SS1, SS2: Ramp - Offset mode	- (Read only)	U8		-	
0x2894:005	SS1, SS2: Ramp - Start-offset relative	x % (Read only)	U8	1	-	
0x2894:006	SS1, SS2: Ramp - Start-offset absolute	x rpm (Read only)	U16	1	-	
0x2894:007	SS1, SS2: Ramp - Currently monitored speed	x rpm (Read only)	U16	1	X	
0x2894:008	SS1, SS2: Ramp - Minimum difference	x rpm (Read only)	I16	1	X	
0x2895	SS1 Source SD-In	- (Read only)	U8		-	
0x2896	SS1 Source S-Bus	- (Read only)	U8		-	
0x2897:001	SS1: Mode	- (Read only)	U8		-	
0x2897:002	SS1: Delay STO after n=0	x ms (Read only)	U16	1	-	
0x2898	SS1 "SS1 active" - Output	- (Read only)	U8		-	
0x2899	SS2 Source SD-In	- (Read only)	U8		-	
0x289A	SS2 Source S-Bus	- (Read only)	U8		-	
0x289B:001	SS2: Mode	- (Read only)	U8		-	
0x289C	SS2 "SS2 active" - Output	- (Read only)	U8		-	
0x289D	SOS Source SD-In	- (Read only)	U8		-	

Address	Name	Default setting	Data type	Factor	A	M
0x289E	SOS Source S-Bus	- (Read only)	U8		-	
0x289F:001	SOS: Tolerance window (Delta p=0)	x incr. (Read only)	I32	1	-	
0x289F:002	SOS: Restart	- (Read only)	U8		-	
0x289F:003	SOS: Maximum change of position	x incr. (Read only)	I32	1	X	
0x28A0	SOS "SOS observed" - Output	- (Read only)	U8		-	
0x28A1	SSE Source SD-In	- (Read only)	U8		-	
0x28A2	SSE Source S-Bus	- (Read only)	U8		-	
0x28A3:001	SSE: Emergency stop function	- (Read only)	U8		-	
0x28A4	SSE "SSE active" - Output	- (Read only)	U8		-	
0x28A8	OMS Source	- (Read only)	U8		-	
0x28A9:001	OMS: Stop function	- (Read only)	U8		-	
0x28A9:002	OMS: Motion function	- (Read only)	U8		-	
0x28A9:003	OMS: Function at low level	- (Read only)	U8		-	
0x28AA	OMS "OMS active" - Output	- (Read only)	U8		-	
0x28AB	RMS Source	- (Read only)	U8		-	
0x28AC:001	RMS: Stop function	- (Read only)	U8		-	
0x28AD	RMS "RMS active" - Output	- (Read only)	U8		-	
0x28AE	ES Source	- (Read only)	U8		-	
0x28AF	ES "ES active" - Output	- (Read only)	U8		-	
0x28B0:001	SMS: Maximum speed Nmax	x rpm (Read only)	U16	1	-	
0x28B0:002	SMS: Response (n>Nmax)	- (Read only)	U8		-	
0x28B1	SMS "SMS observed" - Output	- (Read only)	U8		-	
0x28B2:001	SSM: Monitored speed	x rpm (Read only)	U16	1	-	
0x28B3	SSM "SSM within limits" - Output	- (Read only)	U8		-	
0x28B8:001	SDI: SDIpos - Source SD-In	- (Read only)	U8		-	
0x28B8:002	SDI: SDIneg - Source SD-In	- (Read only)	U8		-	
0x28B9:001	SDI: SDIpos - Source S-Bus	- (Read only)	U8		-	
0x28B9:002	SDI: SDIneg - Source S-Bus	- (Read only)	U8		-	
0x28BA:001	SDI: Monitoring standard operation	- (Read only)	U8		-	
0x28BA:002	SDI: Delay time	x ms (Read only)	U16	1	-	
0x28BA:003	SDI: Tolerance threshold	x incr. (Read only)	I32	1	-	
0x28BA:004	SDI: Error response	- (Read only)	U8		-	
0x28BA:005	SDI: Maximum change of position	x incr. (Read only)	I32	1	X	
0x28BB:001	SDI: "SDIpos observed" - Output	- (Read only)	U8		-	
0x28BB:002	SDI: "SDIneg observed" - Output	- (Read only)	U8		-	
0x28BF:001	SLS: SLS1 - Internal source	- (Read only)	U32		-	
0x28BF:002	SLS: SLS1 - Internal source inversion	- (Read only)	U8		-	
0x28BF:003	SLS: SLS2 - Internal source	- (Read only)	U32		-	
0x28BF:004	SLS: SLS2 - Internal source inversion	- (Read only)	U8		-	
0x28BF:005	SLS: SLS3 - Internal source	- (Read only)	U32		-	
0x28BF:006	SLS: SLS3 - Internal source inversion	- (Read only)	U8		-	
0x28BF:007	SLS: SLS4 - Internal source	- (Read only)	U32		-	
0x28BF:008	SLS: SLS4 - Internal source inversion	- (Read only)	U8		-	
0x28C0:001	SLS: SLS1 - Source SD-In	- (Read only)	U8		-	
0x28C0:002	SLS: SLS2 - Source SD-In	- (Read only)	U8		-	
0x28C0:003	SLS: SLS3 - Source SD-In	- (Read only)	U8		-	
0x28C0:004	SLS: SLS4 - Source SD-In	- (Read only)	U8		-	
0x28C1:001	SLS: SLS1 - Source S-Bus	- (Read only)	U8		-	
0x28C1:002	SLS: SLS2 - Source S-Bus	- (Read only)	U8		-	
0x28C1:003	SLS: SLS3 - Source S-Bus	- (Read only)	U8		-	
0x28C1:004	SLS: SLS4 - Source S-Bus	- (Read only)	U8		-	
0x28C2:001	SLS: SLS1 - Limited speed Nlim1	x rpm (Read only)	U16	1	-	
0x28C2:002	SLS: SLS2 - Limited speed Nlim2	x rpm (Read only)	U16	1	-	
0x28C2:003	SLS: SLS3 - Limited speed Nlim3	x rpm (Read only)	U16	1	-	
0x28C2:004	SLS: SLS4 - Limited speed Nlim4	x rpm (Read only)	U16	1	-	

Address	Name	Default setting	Data type	Factor	A	M
0x28C3:001	SLS: SLS1 - Braking time Nlim1	x ms (Read only)	U16	1	-	
0x28C3:002	SLS: SLS2 - Braking time Nlim2	x ms (Read only)	U16	1	-	
0x28C3:003	SLS: SLS3 - Braking time Nlim3	x ms (Read only)	U16	1	-	
0x28C3:004	SLS: SLS4 - Braking time Nlim4	x ms (Read only)	U16	1	-	
0x28C4:001	SLS: SLS1 - Permitted direction	- (Read only)	U8		-	
0x28C4:002	SLS: SLS2 - Permitted direction	- (Read only)	U8		-	
0x28C4:003	SLS: SLS3 - Permitted direction	- (Read only)	U8		-	
0x28C4:004	SLS: SLS4 - Permitted direction	- (Read only)	U8		-	
0x28C5:001	SLS: SLS1 - Response (n>Nlim1)	- (Read only)	U8		-	
0x28C5:002	SLS: SLS2 - Response (n>Nlim2)	- (Read only)	U8		-	
0x28C5:003	SLS: SLS3 - Response (n>Nlim3)	- (Read only)	U8		-	
0x28C5:004	SLS: SLS4 - Response (n>Nlim4)	- (Read only)	U8		-	
0x28C6:001	SLS: "SLS1 active" - Output	- (Read only)	U8		-	
0x28C6:002	SLS: "SLS2 active" - Output	- (Read only)	U8		-	
0x28C6:003	SLS: "SLS3 active" - Output	- (Read only)	U8		-	
0x28C6:004	SLS: "SLS4 active" - Output	- (Read only)	U8		-	
0x28C7:001	SLS: "SLS1 observed" - Output	- (Read only)	U8		-	
0x28C7:002	SLS: "SLS2 observed" - Output	- (Read only)	U8		-	
0x28C7:003	SLS: "SLS3 observed" - Output	- (Read only)	U8		-	
0x28C7:004	SLS: "SLS4 observed" - Output	- (Read only)	U8		-	
0x28C8	SLI Source SD-In	- (Read only)	U8		-	
0x28C9	SLI Source S-Bus	- (Read only)	U8		-	
0x28CA:001	SLI: Increment size standard operation	x incr. (Read only)	I32	1	-	
0x28CA:002	SLI: Error response standard operation	- (Read only)	U8		-	
0x28CA:003	SLI: Increment size special operation	x incr. (Read only)	I32	1	-	
0x28CA:004	SLI: Maximum change of position	x incr. (Read only)	I32	1	X	
0x28CB	SLI "SLI active" - Output	- (Read only)	U8		-	
0x28D0:001	SLP: SLP1 - Source SD-In	- (Read only)	U8		-	
0x28D0:002	SLP: SLP2 - Source SD-In	- (Read only)	U8		-	
0x28D0:003	SLP: SLP3 - Source SD-In	- (Read only)	U8		-	
0x28D0:004	SLP: SLP4 - Source SD-In	- (Read only)	U8		-	
0x28D1:001	SLP: SLP1 - Source S-Bus	- (Read only)	U8		-	
0x28D1:002	SLP: SLP2 - Source S-Bus	- (Read only)	U8		-	
0x28D1:003	SLP: SLP3 - Source S-Bus	- (Read only)	U8		-	
0x28D1:004	SLP: SLP4 - Source S-Bus	- (Read only)	U8		-	
0x28D2:001	SLP: SLP1 - Lower position limit	x incr. (Read only)	I32	1	-	
0x28D2:002	SLP: SLP2 - Lower position limit	x incr. (Read only)	I32	1	-	
0x28D2:003	SLP: SLP3 - Lower position limit	x incr. (Read only)	I32	1	-	
0x28D2:004	SLP: SLP4 - Lower position limit	x incr. (Read only)	I32	1	-	
0x28D3:001	SLP: SLP1 - Upper position limit	x incr. (Read only)	I32	1	-	
0x28D3:002	SLP: SLP2 - Upper position limit	x incr. (Read only)	I32	1	-	
0x28D3:003	SLP: SLP3 - Upper position limit	x incr. (Read only)	I32	1	-	
0x28D3:004	SLP: SLP4 - Upper position limit	x incr. (Read only)	I32	1	-	
0x28D4:001	SLP: SLP1 - Error response	- (Read only)	U8		-	
0x28D4:002	SLP: SLP2 - Error response	- (Read only)	U8		-	
0x28D4:003	SLP: SLP3 - Error response	- (Read only)	U8		-	
0x28D4:004	SLP: SLP4 - Error response	- (Read only)	U8		-	
0x28D5:001	SLP: "SLP1 observed" - Output	- (Read only)	U8		-	
0x28D5:002	SLP: "SLP2 observed" - Output	- (Read only)	U8		-	
0x28D5:003	SLP: "SLP3 observed" - Output	- (Read only)	U8		-	
0x28D5:004	SLP: "SLP4 observed" - Output	- (Read only)	U8		-	
0x28D8:001	SCA: SCA1 - Lower position limit	x incr. (Read only)	I32	1	-	
0x28D8:002	SCA: SCA2 - Lower position limit	x incr. (Read only)	I32	1	-	
0x28D8:003	SCA: SCA3 - Lower position limit	x incr. (Read only)	I32	1	-	
0x28D8:004	SCA: SCA4 - Lower position limit	x incr. (Read only)	I32	1	-	

Address	Name	Default setting	Data type	Factor	A	M
0x28D9:001	SCA: SCA1 - Upper position limit	x incr. (Read only)	I32	1	-	
0x28D9:002	SCA: SCA2 - Upper position limit	x incr. (Read only)	I32	1	-	
0x28D9:003	SCA: SCA3 - Upper position limit	x incr. (Read only)	I32	1	-	
0x28D9:004	SCA: SCA4 - Upper position limit	x incr. (Read only)	I32	1	-	
0x28DA:001	SCA: "SCA1 within limits" - Output	- (Read only)	U8		-	
0x28DA:002	SCA: "SCA2 within limits" - Output	- (Read only)	U8		-	
0x28DA:003	SCA: "SCA3 within limits" - Output	- (Read only)	U8		-	
0x28DA:004	SCA: "SCA4 within limits" - Output	- (Read only)	U8		-	
0x28DC	PDSS Source SD-In	- (Read only)	U8		-	
0x28DD	PDSS Source S-Bus	- (Read only)	U8		-	
0x28DE:001	PDSS: Permanent activation	- (Read only)	U8		-	
0x28DE:002	PDSS: Lower position limit	x incr. (Read only)	I32	1	-	
0x28DE:003	PDSS: Upper position limit	x incr. (Read only)	I32	1	-	
0x28DE:004	PDSS: Lower SCS limit	x incr. (Read only)	I32	1	-	
0x28DE:005	PDSS: Upper SCS limit	x incr. (Read only)	I32	1	-	
0x28DE:006	PDSS: SCS from lower limit	x rpm (Read only)	U16	1	-	
0x28DE:007	PDSS: SCS from upper limit	x rpm (Read only)	U16	1	-	
0x28DE:008	PDSS: Maximum speed	x rpm (Read only)	U16	1	-	
0x28DE:009	PDSS: Maximum deceleration lower limit	- (Read only)	U16	1	-	
0x28DE:010	PDSS: Maximum deceleration upper limit	- (Read only)	U16	1	-	
0x28DE:011	PDSS: Error response	- (Read only)	U8		-	
0x28DE:012	PDSS: Currently monitored speed	x rpm (Read only)	U16	1	X	
0x28DE:013	PDSS: Minimum difference monitored speed	x rpm (Read only)	I16	1	X	
0x28DF	PDSS "PDSSpos observed" - Output	- (Read only)	U8		-	
0x28E0	PDSS "PDSSneg observed" - Output	- (Read only)	U8		-	
0x28E4	SBC Source SD-In	- (Read only)	U8		-	
0x28E5	SBC Source S-Bus	- (Read only)	U8		-	
0x28E6:001	SBC: Brake mode	- (Read only)	U8		-	
0x28E6:002	SBC: Delay SBC	x ms (Read only)	U16	1	-	
0x28E6:003	SBC: Delay STO	x ms (Read only)	U16	1	-	
0x28E6:004	SBC: Brake open delay	x ms (Read only)	U16	1	-	
0x28E7:001	SBC: "SBC active" - Output	- (Read only)	U8		-	
0x28E7:002	SBC: "SBC activated" - Output	- (Read only)	U8		-	
0x28E8:001	Diagnostic: Configuration diagnostic value 1	**PDSS - Current monitored speed [1]**	U16		X	
0x28E8:002	Diagnostic: Configuration diagnostic value 2	**SS1, SS2 - Current speed ramp [2]**	U16		X	
0x28E9:001	Diagnostic: Diagnostic value 1	- (Read only)	I16	1	X	●
0x28E9:002	Diagnostic: Diagnostic value 2	- (Read only)	I16	1	X	●
0x2900:001	Speed controller settings: Gain	**0.00033 Nm/rpm**	U32	100000	-	
0x2900:002	Speed controller settings: Reset time	**17.6 ms**	U16	10	-	
0x2900:003	Speed controller settings: Rate time	**0.00 ms**	U16	100	-	
0x2901	Speed controller gain adaption	**100.00 %**	U16	100	-	●
0x2902	I component load value	**0.0 %**	I16	10	-	●
0x2903	Speed setpoint filter time	**0.0 ms**	U16	10	-	
0x2904	Actual speed filter time	**0.3 ms**	U16	10	-	
0x2907:001	Additional speed limitation	**0 rpm**	U32	1	X	●
0x2910:001	Inertia settings: Motor moment of inertia	**0.14 kg cm²**	U32	100	-	
0x2910:002	Inertia settings: Scaled load inertia	**0.00 kg cm²**	U32	100	-	
0x2910:003	Inertia settings: Coupling	**Stiff [0]**	U8		-	
0x2910:004	Inertia settings: Mechanical natural frequency	**0.0 Hz**	U16	10	-	
0x2910:005	Inertia settings: Load moment of inertia (elastic coupled)	**0.00 kg cm²**	U32	100	-	
0x2922:001	Following error diagnostics: Following error (interval) - Time	**1000 ms**	U16	1	X	
0x2922:002	Following error diagnostics: Following error (interval) - Mean value	x.xx ° (Read only)	U32	100	X	

Address	Name	Default setting	Data type	Factor	A	M
0x2922:003	Following error diagnostics: Following error (interval) - Maximum value	x.xx ° (Read only)	U32	100	X	
0x2922:004	Following error diagnostics: Following error (manual) - Start/Stop	**Stop [0]**	U8		X	
0x2922:005	Following error diagnostics: Following error (manual) - Mean value	x.xx ° (Read only)	U32	100	X	
0x2922:006	Following error diagnostics: Following error (manual) - Maximum value	x.xx ° (Read only)	U32	100	X	
0x2922:007	Following error diagnostics: Following error (standstill-standstill) - Mean value	x.xx ° (Read only)	U32	100	X	
0x2922:008	Following error diagnostics: Following error (standstill-standstill) - Maximum value	x.xx ° (Read only)	U32	100	X	
0x2939	Switching frequency	**4 kHz variable / drive-optimised [1]**	U8		-	
0x2941	Current controller feedforward control	**Disable [0]**	U8		-	
0x2942:001	Current controller parameters: Gain	**148.21 V/A**	U32	100	-	
0x2942:002	Current controller parameters: Reset time	**3.77 ms**	U32	100	-	
0x2943	Current setpoint filter time	**0.00 ms**	U16	100	-	
0x2944:001	Torque setpoint notch filter: Frequency notch filter 1	**200.0 Hz**	U16	10	-	
0x2944:002	Torque setpoint notch filter: Bandwidth notch filter 1	**20.0 Hz**	U16	10	-	
0x2944:003	Torque setpoint notch filter: Damping notch filter 1	**0 dB**	U8	1	-	
0x2944:004	Torque setpoint notch filter: Frequency notch filter 2	**400.0 Hz**	U16	10	-	
0x2944:005	Torque setpoint notch filter: Bandwidth notch filter 2	**40.0 Hz**	U16	10	-	
0x2944:006	Torque setpoint notch filter: Damping notch filter 2	**0 dB**	U8	1	-	
0x2945	Torque setpoint jerk limitation	**400.0 %**	U16	10	-	
0x2946:001	Speed limitation: Upper speed limit	**0 rpm**	I32	480000 / 2147483647	-	●
0x2946:002	Speed limitation: Lower speed limit	**0 rpm**	I32	480000 / 2147483647	-	●
0x2947:001	Inverter characteristic: Value y1	**0.00 V**	U16	100	-	
0x2947:002	Inverter characteristic: Value y2	**0.00 V**	U16	100	-	
0x2947:003	Inverter characteristic: Value y3	**0.00 V**	U16	100	-	
0x2947:004	Inverter characteristic: Value y4	**0.00 V**	U16	100	-	
0x2947:005	Inverter characteristic: Value y5	**0.00 V**	U16	100	-	
0x2947:006	Inverter characteristic: Value y6	**0.00 V**	U16	100	-	
0x2947:007	Inverter characteristic: Value y7	**0.00 V**	U16	100	-	
0x2947:008	Inverter characteristic: Value y8	**0.00 V**	U16	100	-	
0x2947:009	Inverter characteristic: Value y9	**0.00 V**	U16	100	-	
0x2947:010	Inverter characteristic: Value y10	**0.00 V**	U16	100	-	
0x2947:011	Inverter characteristic: Value y11	**0.00 V**	U16	100	-	
0x2947:012	Inverter characteristic: Value y12	**0.00 V**	U16	100	-	
0x2947:013	Inverter characteristic: Value y13	**0.00 V**	U16	100	-	
0x2947:014	Inverter characteristic: Value y14	**0.00 V**	U16	100	-	
0x2947:015	Inverter characteristic: Value y15	**0.00 V**	U16	100	-	
0x2947:016	Inverter characteristic: Value y16	**0.00 V**	U16	100	-	
0x2947:017	Inverter characteristic: Value y17	**0.00 V**	U16	100	-	
0x294A:001	Torque limits offset: Torque offset	**0.0 %**	I16	10	-	
0x294A:002	Torque limits offset: Resulting positive torque limit	x.x % (Read only)	I16	10	X	
0x294A:003	Torque limits offset: Resulting negative torque limit	x.x % (Read only)	I16	10	X	
0x2980	Position controller gain	**28.40 Hz**	U32	100	-	
0x2981	Position controller gain adaption	**100.00 %**	U16	100	-	●

Address	Name	Default setting	Data type	Factor	A	M
0x2982	Position controller output signal limitation	**480000.00 rpm**	U32	480000 / 2147483647	-	●
0x2983	Actual position start value	**0 inc**	I32	1	-	●
0x2984	Mode for setting the actual position	**Absolute [0]**	U8		-	
0x2986	Resulting gain adaption	x.xx % (Read only)	U32	100	X	
0x29C0:001	Field controller settings: Gain	**165.84 A/Vs**	U32	100	-	
0x29C0:002	Field controller settings: Reset time	**15.1 ms**	U16	10	-	
0x29E0:001	Field weakening controller settings: Gain (ASM)	**0.000 Vs/V**	U32	1000	-	
0x29E0:002	Field weakening controller settings: Reset time (ASM)	**2000.0 ms**	U32	10	-	
0x29E1	Field weakening controller Field limitation	**100.00 %**	U16	100	-	●
0x29E2	DC-bus filter time	**25.0 ms**	U16	10	-	
0x29E3	Motor voltage filter time	**25.0 ms**	U16	10	-	
0x29E4	Voltage reserve range	**5 %**	U8	1	-	
0x2B00	V/f characteristic shape	**Linear [0]**	U8		C	
0x2B01:001	V/f shape data: Base voltage	**225 V**	U16	1	-	
0x2B01:002	V/f shape data: Base frequency	**270 Hz**	U16	1	-	
0x2B02:001	Frequency grid points (x) user V/f characteristic: x1 = f01	**-50 Hz**	I16	1	-	
0x2B02:002	Frequency grid points (x) user V/f characteristic: x2 = f02	**-40 Hz**	I16	1	-	
0x2B02:003	Frequency grid points (x) user V/f characteristic: x3 = f03	**-30 Hz**	I16	1	-	
0x2B02:004	Frequency grid points (x) user V/f characteristic: x4 = f04	**-20 Hz**	I16	1	-	
0x2B02:005	Frequency grid points (x) user V/f characteristic: x5 = f05	**-10 Hz**	I16	1	-	
0x2B02:006	Frequency grid points (x) user V/f characteristic: x6 = f06	**0 Hz**	I16	1	-	
0x2B02:007	Frequency grid points (x) user V/f characteristic: x7 = f07	**10 Hz**	I16	1	-	
0x2B02:008	Frequency grid points (x) user V/f characteristic: x8 = f08	**20 Hz**	I16	1	-	
0x2B02:009	Frequency grid points (x) user V/f characteristic: x9 = f09	**30 Hz**	I16	1	-	
0x2B02:010	Frequency grid points (x) user V/f characteristic: x10 = f10	**40 Hz**	I16	1	-	
0x2B02:011	Frequency grid points (x) user V/f characteristic: x11 = f11	**50 Hz**	I16	1	-	
0x2B03:001	Voltage grid points (y) user V/f characteristic: y1 = U01 (x = f01)	**400.00 V**	U32	100	-	
0x2B03:002	Voltage grid points (y) user V/f characteristic: y2 = U02 (x = f02)	**320.00 V**	U32	100	-	
0x2B03:003	Voltage grid points (y) user V/f characteristic: y3 = U03 (x = f03)	**240.00 V**	U32	100	-	
0x2B03:004	Voltage grid points (y) user V/f characteristic: y4 = U04 (x = f04)	**160.00 V**	U32	100	-	
0x2B03:005	Voltage grid points (y) user V/f characteristic: y5 = U05 (x = f05)	**80.00 V**	U32	100	-	
0x2B03:006	Voltage grid points (y) user V/f characteristic: y6 = U06 (x = f06)	**0.00 V**	U32	100	-	
0x2B03:007	Voltage grid points (y) user V/f characteristic: y7 = U07 (x = f07)	**80.00 V**	U32	100	-	
0x2B03:008	Voltage grid points (y) user V/f characteristic: y8 = U08 (x = f08)	**160.00 V**	U32	100	-	
0x2B03:009	Voltage grid points (y) user V/f characteristic: y9 = U09 (x = f09)	**240.00 V**	U32	100	-	

Address	Name	Default setting	Data type	Factor	A	M
0x2B03:010	Voltage grid points (y) user V/f characteristic: y10 = U10 (x = f10)	**320.00 V**	U32	100	-	
0x2B03:011	Voltage grid points (y) user V/f characteristic: y11 = U11 (x = f11)	**400.00 V**	U32	100	-	
0x2B04	V/f boost controller - current setpoint	**0.00 A**	U32	100	-	
0x2B05:001	V/f boost controller settings: Gain	**148.21 V/A**	U32	100	-	
0x2B05:002	V/f boost controller settings: Reset time	**3.77 ms**	U32	100	-	
0x2B05:003	V/f boost controller settings: Dynamic current setpoint	**0.00 A**	U32	100	-	
0x2B06	Voltage boost	**0.0 V**	U16	10	-	
0x2B07:001	Load adaption: Direction of rotation	**Passive load [0]**	U8		C	
0x2B07:002	Load adaption: Load adaption value	**20.00 %**	U32	100	-	
0x2B08:001	V/f Imax controller: Gain	**0.001 Hz/A**	U32	1000	-	
0x2B08:002	V/f Imax controller: Reset time	**100.0 ms**	U32	10	-	
0x2B09:001	Slip compensation: Gain	**0.00 %**	I16	100	-	
0x2B09:002	Slip compensation: Filter time	**2000 ms**	U16	1	-	
0x2B0A:001	Oscillation damping: Gain	**20 %**	I16	1	-	
0x2B0A:002	Oscillation damping: Filter time	**5 ms**	U16	1	-	
0x2B0A:003	Oscillation damping: Limitation	**0.2 Hz**	U16	10	-	
0x2B0A:004	Oscillation damping: Final ramp frequency	**0 %**	U8	1	-	
0x2B0B	Ramp generator frequency	x.x Hz (Read only)	I16	10	X	●
0x2B0C	Override field weakening	**0.0 Hz**	I16	10	-	
0x2B80	Current for DC-injection braking	**0.00 A**	U16	100	-	
0x2BA0	Activate flying restart	**Off [0]**	U8		-	
0x2BA1	Flying restart circuit	**15 %**	U16	1	-	
0x2BA2	Start frequency	**20.0 Hz**	I16	10	-	
0x2BA3	Integration time	**600 ms**	U16	1	-	
0x2BA4	Minimum deviation	**5.00 °**	U16	100	-	
0x2BA5	Delay time	**0 ms**	U16	1	-	
0x2BA6:001	Result: Determined speed [rpm]	x rpm (Read only)	I16	1	X	●
0x2BA6:002	Result: Determined speed [n unit]	rpm (Read only)	I32	480000 / 2147483647	X	●
0x2C00	Motor control mode	**Servoregelung (SC-PSM) [1]**	U8		C	
0x2C01:001	Motor parameters: Number of pole pairs	- (Read only)	U8	1	X	
0x2C01:002	Motor parameters: Stator resistance	**13.5000 Ω**	U32	10000	-	
0x2C01:003	Motor parameters: Stator leakage inductance	**51.000 mH**	U32	1000	-	
0x2C01:004	Motor parameters: Rated speed	**4050 rpm**	U16	1	-	
0x2C01:005	Motor parameters: Rated frequency	**270.0 Hz**	U16	10	-	
0x2C01:006	Motor parameters: Rated power	**0.25 kW**	U16	100	-	
0x2C01:007	Motor parameters: Rated voltage	**225 V**	U16	1	-	
0x2C01:008	Motor parameters: Cosine phi	**0.80**	U16	100	-	
0x2C01:009	Motor parameters: Insulation class	**F (cut-off temperature = 155 °C) [4]**	U8		-	
0x2C01:010	Motor parameters: Motor name	"**MCS06C41**"	STRING[50]		-	
0x2C02:001	Motor parameter (ASM): Rotor resistance	**0.0000 Ω**	U32	10000	-	
0x2C02:002	Motor parameter (ASM): Mutual inductance	**0.0 mH**	U32	10	-	
0x2C02:003	Motor parameter (ASM): Magnetising current	**0.00 A**	U16	100	-	
0x2C03:001	Motor parameter (PSM): Back EMF constant	**41.8 V/1000rpm**	U32	10	-	
0x2C03:002	Motor parameter (PSM): Resolver pole position	**-90.0 °**	I16	10	-	
0x2C03:003	Motor parameter (PSM): Magnets temperature coefficient (kTN)	**-0.110 %/°C**	I16	1000	-	
0x2C03:004	Motor parameter (PSM): Encoder pole position	**0.0 °**	I16	10	-	
0x2C04:001	d-axis Lss saturation characteristic: y1 = L01 (x = 0.00 %)	**165 %**	U16	1	-	

Address	Name	Default setting	Data type	Factor	A	M
0x2C04:002	d-axis Lss saturation characteristic: y2 = L02 (x = 6.25 %)	**200 %**	U16	1	-	
0x2C04:003	d-axis Lss saturation characteristic: y3 = L03 (x = 12.50 %)	**146 %**	U16	1	-	
0x2C04:004	d-axis Lss saturation characteristic: y4 = L04 (x = 18.75 %)	**117 %**	U16	1	-	
0x2C04:005	d-axis Lss saturation characteristic: y5 = L05 (x = 25.00 %)	**97 %**	U16	1	-	
0x2C04:006	d-axis Lss saturation characteristic: y6 = L06 (x = 31.25 %)	**82 %**	U16	1	-	
0x2C04:007	d-axis Lss saturation characteristic: y7 = L07 (x = 37.50 %)	**71 %**	U16	1	-	
0x2C04:008	d-axis Lss saturation characteristic: y8 = L08 (x = 42.75 %)	**62 %**	U16	1	-	
0x2C04:009	d-axis Lss saturation characteristic: y9 = L09 (x = 50.00 %)	**55 %**	U16	1	-	
0x2C04:010	d-axis Lss saturation characteristic: y10 = L10 (x = 56.25 %)	**50 %**	U16	1	-	
0x2C04:011	d-axis Lss saturation characteristic: y11 = L11 (x = 62.50 %)	**46 %**	U16	1	-	
0x2C04:012	d-axis Lss saturation characteristic: y12 = L12 (x = 68.75 %)	**43 %**	U16	1	-	
0x2C04:013	d-axis Lss saturation characteristic: y13 = L13 (x = 75.00 %)	**42 %**	U16	1	-	
0x2C04:014	d-axis Lss saturation characteristic: y14 = L14 (x = 81.25 %)	**41 %**	U16	1	-	
0x2C04:015	d-axis Lss saturation characteristic: y15 = L15 (x = 87.50 %)	**41 %**	U16	1	-	
0x2C04:016	d-axis Lss saturation characteristic: y16 = L16 (x = 93.25 %)	**41 %**	U16	1	-	
0x2C04:017	d-axis Lss saturation characteristic: y17 = L17 (x = 100.00 %)	**41 %**	U16	1	-	
0x2C04:018	d-axis Lss saturation characteristic: Activation Lss saturation characteristic	**Adjustment on [1]**	U16		-	
0x2C05	Reference for current grid points (x) Lss saturation characteristic	**5.4 A**	U16	10	-	
0x2C06:001	Grid points for magnet characteristic (current): x1 = i01/iN	**0 %**	U16	1	-	
0x2C06:002	Grid points for magnet characteristic (current): y1 = kT01/kTN	**100 %**	U16	1	-	
0x2C06:003	Grid points for magnet characteristic (current): x2 = i02/iN	**100 %**	U16	1	-	
0x2C06:004	Grid points for magnet characteristic (current): y2 = kT02/kTN	**100 %**	U16	1	-	
0x2C06:005	Grid points for magnet characteristic (current): x3 = i03/iN	**200 %**	U16	1	-	
0x2C06:006	Grid points for magnet characteristic (current): y3 = kT03/kTN	**100 %**	U16	1	-	
0x2C06:007	Grid points for magnet characteristic (current): x4 = i04/iN	**415 %**	U16	1	-	
0x2C06:008	Grid points for magnet characteristic (current): y4 = kT04/kTN	**72 %**	U16	1	-	
0x2C07:001	Inductance grid points (y) Lh saturation characteristic: y1 = L01 (x = 0.00 %)	**118 %**	U16	1	-	
0x2C07:002	Inductance grid points (y) Lh saturation characteristic: y2 = L02 (x = 6.25 %)	**118 %**	U16	1	-	
0x2C07:003	Inductance grid points (y) Lh saturation characteristic: y3 = L03 (x = 12.50 %)	**118 %**	U16	1	-	
0x2C07:004	Inductance grid points (y) Lh saturation characteristic: y4 = L04 (x = 18.75 %)	**117 %**	U16	1	-	

Address	Name	Default setting	Data type	Factor	A	M
0x2C07:005	Inductance grid points (y) Lh saturation characteristic: y5 = L05 (x = 25.00 %)	**116 %**	U16	1	-	
0x2C07:006	Inductance grid points (y) Lh saturation characteristic: y6 = L06 (x = 31.25 %)	**114 %**	U16	1	-	
0x2C07:007	Inductance grid points (y) Lh saturation characteristic: y7 = L07 (x = 37.50 %)	**111 %**	U16	1	-	
0x2C07:008	Inductance grid points (y) Lh saturation characteristic: y8 = L08 (x = 43.75 %)	**107 %**	U16	1	-	
0x2C07:009	Inductance grid points (y) Lh saturation characteristic: y9 = L09 (x = 50.00 %)	**100 %**	U16	1	-	
0x2C07:010	Inductance grid points (y) Lh saturation characteristic: y10 = L10 (x = 56.25 %)	**93 %**	U16	1	-	
0x2C07:011	Inductance grid points (y) Lh saturation characteristic: y11 = L11 (x = 62.50 %)	**86 %**	U16	1	-	
0x2C07:012	Inductance grid points (y) Lh saturation characteristic: y12 = L12 (x = 68.75 %)	**78 %**	U16	1	-	
0x2C07:013	Inductance grid points (y) Lh saturation characteristic: y13 = L13 (x = 75.00 %)	**71 %**	U16	1	-	
0x2C07:014	Inductance grid points (y) Lh saturation characteristic: y14 = L14 (x = 81.25 %)	**64 %**	U16	1	-	
0x2C07:015	Inductance grid points (y) Lh saturation characteristic: y15 = L15 (x = 87.50 %)	**57 %**	U16	1	-	
0x2C07:016	Inductance grid points (y) Lh saturation characteristic: y16 = L16 (x = 93.75 %)	**50 %**	U16	1	-	
0x2C07:017	Inductance grid points (y) Lh saturation characteristic: y17 = L17 (x = 100.00 %)	**42 %**	U16	1	-	
0x2C08	Method for setting motor parameters	**Select from catalogue (Lenze motors) [1]**	U8		-	
0x2C40	Motor encoder type	**SinCos encoder [1]**	U8		C	
0x2C41:001	Motor encoder settings (HIPERFACE®): Type code detected	- (Read only)	U8	1	X	
0x2C41:002	Motor encoder settings (HIPERFACE®): Type code manual input	**0**	U8	1	C	
0x2C41:003	Motor encoder settings (HIPERFACE®): Manual input - Number of detectable motor encoder revolutions	**1**	U16	1	C	
0x2C41:004	Motor encoder settings (HIPERFACE®): Error response	**Fault > CiA402 [1]**	U8		-	
0x2C41:005	Motor encoder settings (HIPERFACE®): Serial number	- (Read only)	STRING[50]		X	
0x2C41:006	Motor encoder settings (HIPERFACE®): Actual position (raw data)	- (Read only)	U32	1	X	●
0x2C41:007	Motor encoder settings (HIPERFACE®): No. of periods detected	- (Read only)	U16	1	X	●
0x2C41:008	Motor encoder settings (HIPERFACE®): Type code verification	- (Read only)	U8		X	●
0x2C41:009	Motor encoder settings (HIPERFACE®): Encoder type	- (Read only)	U8		X	●
0x2C41:010	Motor encoder settings (HIPERFACE®): Period length of linear encoder	x nm (Read only)	U32	1	X	●
0x2C42:001	Encoder settings: Increments/revolution	**1024**	U32	1	C	
0x2C42:002	Encoder settings: Supply voltage	**5.0 V**	U8	10	C	
0x2C42:003	Encoder settings: Angle drift	x.x ° (Read only)	I16	10	X	●
0x2C42:004	Encoder settings: Actual amplitude signal quality	x % (Read only)	U8	1	X	
0x2C43	Motor encoder resolver number of pole pairs	**1**	U8	1	C	
0x2C44:001	Motor encoder identification (Resolver): Angle	**0**	I16	1	-	
0x2C44:002	Motor encoder identification (Resolver): Cosine track gain	**100 %**	U16	1	-	
0x2C44:003	Motor encoder identification (Resolver): Sine track gain	**100 %**	U16	1	-	
0x2C44:006	Motor encoder identification (Resolver): Identification status	- (Read only)	U16		HX	

Address	Name	Default setting	Data type	Factor	A	M
0x2C44:008	Motor encoder identification (Resolver): Cosine track offset	**0.000 %**	I32	1000	-	
0x2C44:009	Motor encoder identification (Resolver): Sine track offset	**0.000 %**	I32	1000	-	
0x2C44:011	Motor encoder identification (Resolver): Cyclic online compensation	**[1]**	U8		-	
0x2C44:012	Motor encoder identification (Resolver): Harmonic for cyclic online compensation	**22**	U16	1	-	
0x2C45	Motor feedback error response	**Fault > CiA402 [1]**	U8		-	
0x2C46	Number of the absolute ascertainable revolutions of motor encoder	- (Read only)	U16	1	X	
0x2C47	Open circuit detection sensitivity of motor encoder	**100 %**	U8	1	-	
0x2C4A:001	Motor encoder (SSI) protocol parameters: Bit rate	**300 kbps**	U16	1	C	
0x2C4A:002	Motor encoder (SSI) protocol parameters: Telegram length	**25**	U8	1	C	
0x2C4A:003	Motor encoder (SSI) protocol parameters: Bits/ revolution	**13**	U8	1	C	
0x2C4A:004	Motor encoder (SSI) protocol parameters: Position data start bit	**0**	U8	1	C	
0x2C4A:005	Motor encoder (SSI) protocol parameters: Data package 1 start bit	**0**	U8	1	C	
0x2C4A:006	Motor encoder (SSI) protocol parameters: Data package 2 start bit	**0**	U8	1	C	
0x2C4A:007	Motor encoder (SSI) protocol parameters: Data package 3 start bit	**0**	U8	1	C	
0x2C4A:008	Motor encoder (SSI) protocol parameters: Position data length	**0**	U8	1	C	
0x2C4A:009	Motor encoder (SSI) protocol parameters: Data package 1 length	**0**	U8	1	C	
0x2C4A:010	Motor encoder (SSI) protocol parameters: Data package 2 length	**0**	U8	1	C	
0x2C4A:011	Motor encoder (SSI) protocol parameters: Data package 3 length	**0**	U8	1	C	
0x2C4A:012	Motor encoder (SSI) protocol parameters: Position data coding	**Binary [0]**	U8		C	
0x2C4A:013	Motor encoder (SSI) protocol parameters: Data package 1 coding	**Binary [0]**	U8		C	
0x2C4A:014	Motor encoder (SSI) protocol parameters: Data package 2 coding	**Binary [0]**	U8		C	
0x2C4A:015	Motor encoder (SSI) protocol parameters: Data package 3 coding	**Binary [0]**	U8		C	
0x2C4A:016	Motor encoder (SSI) protocol parameters: Position raw data	- (Read only)	U32	1	X	●
0x2C4A:017	Motor encoder (SSI) protocol parameters: Data package 1 raw data	- (Read only)	U32	1	X	●
0x2C4A:018	Motor encoder (SSI) protocol parameters: Data package 2 raw data	- (Read only)	U32	1	X	●
0x2C4A:019	Motor encoder (SSI) protocol parameters: Data package 3 raw data	- (Read only)	U32	1	X	●
0x2C4A:020	Motor encoder (SSI) protocol parameters: Encoder type	**Rotative encoder [0]**	U8		C	
0x2C4A:021	Motor encoder (SSI) protocol parameters: Position raw data scaled by 0x608F	x inc (Read only)	I32	1	X	●
0x2C4A:022	Motor encoder (SSI) protocol parameters: Monoflop time	**0 µs**	U16	1	C	
0x2C4A:023	Motor encoder (SSI) protocol parameters: Resulting SSI-telegram cycle time	x.x µs (Read only)	U16	10	X	
0x2C4B:001	Motor encoder (HDSL): Release version	- (Read only)	U8	1	X	
0x2C4B:002	Motor encoder (HDSL): Release Date	- (Read only)	U32	1	X	
0x2C4B:003	Motor encoder (HDSL): Encoder ID	- (Read only)	U32	1	X	

Address	Name	Default setting	Data type	Factor	A	M
0x2C4B:004	Motor encoder (HDSL): Type of encoder	- (Read only)	U16	1	X	
0x2C4B:005	Motor encoder (HDSL): Resolution	- (Read only)	U32	1	X	
0x2C4B:006	Motor encoder (HDSL): Measurement range	- (Read only)	U32	1	X	
0x2C4B:007	Motor encoder (HDSL): Type name	- (Read only)	STRING[50]		X	
0x2C4B:008	Motor encoder (HDSL): Serial number	- (Read only)	STRING[50]		X	
0x2C4B:009	Motor encoder (HDSL): Device version	- (Read only)	STRING[50]		X	
0x2C4B:010	Motor encoder (HDSL): Firmware date	- (Read only)	STRING[50]		X	
0x2C4B:011	Motor encoder (HDSL): EEPROM size	- (Read only)	U16	1	X	
0x2C4B:012	Motor encoder (HDSL): Safe Channel 2 Resolution	- (Read only)	U32	1	X	
0x2C4B:020	Motor encoder (HDSL): Delay / RSSI	- (Read only)	U8		HX	
0x2C4B:021	Motor encoder (HDSL): Quality monitoring	- (Read only)	U8		HX	
0x2C4B:022	Motor encoder (HDSL): Slave RSSI	- (Read only)	U8		HX	
0x2C4B:023	Motor encoder (HDSL): Supply voltage	x.xxx V (Read only)	U16	1000	X	
0x2C4B:024	Motor encoder (HDSL): Rotation speed range	x rpm (Read only)	U16	1	X	
0x2C4B:025	Motor encoder (HDSL): Auswahl	**No value [0]**	U16		-	
0x2C4B:026	Motor encoder (HDSL): Value	- (Read only)	I64	1	X	
0x2C4B:040	Motor encoder (HDSL): Events	- (Read only)	U16		HX	
0x2C4B:041	Motor encoder (HDSL): Status summaries	- (Read only)	U8		HX	
0x2C4B:042	Motor encoder (HDSL): Encoder status, byte 0	- (Read only)	U8		HX	
0x2C4B:043	Motor encoder (HDSL): Encoder status, byte 1	- (Read only)	U8		HX	
0x2C4B:044	Motor encoder (HDSL): Encoder status, byte 2	- (Read only)	U8		HX	
0x2C4B:045	Motor encoder (HDSL): Encoder status, byte 3	- (Read only)	U8		HX	
0x2C4B:046	Motor encoder (HDSL): Encoder status, byte 4	- (Read only)	U8		HX	
0x2C4B:047	Motor encoder (HDSL): Encoder status, byte 5	- (Read only)	U8		HX	
0x2C4B:048	Motor encoder (HDSL): Encoder status, byte 6	- (Read only)	U8		HX	
0x2C4B:049	Motor encoder (HDSL): Encoder status, byte 7	- (Read only)	U8		HX	
0x2C4B:050	Motor encoder (HDSL): Fast position	- (Read only)	I64	1	X	
0x2C4F	Parameter CRC of motor encoder	- (Read only)	U32	1	X	
0x2C50	Load encoder/master encoder type	**SinCos encoder [1]**	U8		C	
0x2C51:001	Load encoder/master encoder settings (HIPERFACE®): Type code detected	- (Read only)	U8	1	X	
0x2C51:002	Load encoder/master encoder settings (HIPERFACE®): Type code manual input	**0**	U8	1	C	
0x2C51:003	Load encoder/master encoder settings (HIPERFACE®): Manual input - Number of detectable load/master encoder revolutions	**1**	U16	1	C	
0x2C51:004	Load encoder/master encoder settings (HIPERFACE®): Error response	**Fault > CiA402 [1]**	U8		-	
0x2C51:005	Load encoder/master encoder settings (HIPERFACE®): Serial number	- (Read only)	STRING[50]		X	
0x2C51:006	Load encoder/master encoder settings (HIPERFACE®): Actual position (raw data)	- (Read only)	U32	1	X	●
0x2C51:007	Load encoder/master encoder settings (HIPERFACE®): No. of periods detected	- (Read only)	U16	1	X	●
0x2C51:008	Load encoder/master encoder settings (HIPERFACE®): Type code verification	- (Read only)	U8		X	●
0x2C51:009	Load encoder/master encoder settings (HIPERFACE®): Encoder type	- (Read only)	U8		X	●
0x2C51:010	Load encoder/master encoder settings (HIPERFACE®): No. of periods linear encoder	x nm (Read only)	U32	1	X	●
0x2C52:001	Load encoder/master encoder settings (encoder): Increments/revolution	**1024**	U32	1	C	
0x2C52:002	Load encoder/master encoder settings (encoder): Supply voltage	**5.0 V**	U8	10	C	
0x2C52:003	Load encoder/master encoder settings (encoder): Angle drift	x.x ° (Read only)	I16	10	X	●

Address	Name	Default setting	Data type	Factor	A	M
0x2C52:004	Load encoder/master encoder settings (encoder): Actual amplitude signal quality	x % (Read only)	U8	1	X	
0x2C53	Load encoder/master encoder resolver number of pole pairs	**1**	U8	1	C	
0x2C54:001	Load encoder/master encoder identification (Resolver): Angle	**0**	I16	1	-	
0x2C54:002	Load encoder/master encoder identification (Resolver): Cosine track gain	**100 %**	U16	1	-	
0x2C54:003	Load encoder/master encoder identification (Resolver): Sine track gain	**100 %**	U16	1	-	
0x2C54:006	Load encoder/master encoder identification (Resolver): Identification status	- (Read only)	U16		HX	
0x2C54:008	Load encoder/master encoder identification (Resolver): Cosine track offset	**0.000 %**	I32	1000	-	
0x2C54:009	Load encoder/master encoder identification (Resolver): Sine track offset	**0.000 %**	I32	1000	-	
0x2C55	Load encoder/master encoder error response	**Fault > CiA402 [1]**	U8		-	
0x2C56	Number of the absolute ascertainable revolutions of load encoder/master encoder	- (Read only)	U16	1	X	
0x2C57	Open circuit detection sensitivity of load encoder/ master encoder	**100 %**	U8	1	-	
0x2C5A:001	Load encoder/master encoder (SSI) protocol parameters: Bit rate	**300 kbps**	U16	1	C	
0x2C5A:002	Load encoder/master encoder (SSI) protocol parameters: Telegram length	**25**	U8	1	C	
0x2C5A:003	Load encoder/master encoder (SSI) protocol parameters: Bits/revolution	**13**	U8	1	C	
0x2C5A:004	Load encoder/master encoder (SSI) protocol parameters: Position data start bit	**0**	U8	1	C	
0x2C5A:005	Load encoder/master encoder (SSI) protocol parameters: Data package 1 start bit	**0**	U8	1	C	
0x2C5A:006	Load encoder/master encoder (SSI) protocol parameters: Data package 2 start bit	**0**	U8	1	C	
0x2C5A:007	Load encoder/master encoder (SSI) protocol parameters: Data package 3 start bit	**0**	U8	1	C	
0x2C5A:008	Load encoder/master encoder (SSI) protocol parameters: Position data length	**25**	U8	1	C	
0x2C5A:009	Load encoder/master encoder (SSI) protocol parameters: Data package 1 length	**0**	U8	1	C	
0x2C5A:010	Load encoder/master encoder (SSI) protocol parameters: Data package 2 length	**0**	U8	1	C	
0x2C5A:011	Load encoder/master encoder (SSI) protocol parameters: Data package 3 length	**0**	U8	1	C	
0x2C5A:012	Load encoder/master encoder (SSI) protocol parameters: Position data coding	**Binary [0]**	U8		C	
0x2C5A:013	Load encoder/master encoder (SSI) protocol parameters: Data package 1 coding	**Binary [0]**	U8		C	
0x2C5A:014	Load encoder/master encoder (SSI) protocol parameters: Data package 2 coding	**Binary [0]**	U8		C	
0x2C5A:015	Load encoder/master encoder (SSI) protocol parameters: Data package 3 coding	**Binary [0]**	U8		C	
0x2C5A:016	Load encoder/master encoder (SSI) protocol parameters: Position raw data	- (Read only)	U32	1	X	●
0x2C5A:017	Load encoder/master encoder (SSI) protocol parameters: Data package 1 raw data	- (Read only)	U32	1	X	●
0x2C5A:018	Load encoder/master encoder (SSI) protocol parameters: Data package 2 raw data	- (Read only)	U32	1	X	●
0x2C5A:019	Load encoder/master encoder (SSI) protocol parameters: Data package 3 raw data	- (Read only)	U32	1	X	●

Address	Name	Default setting	Data type	Factor	A	M
0x2C5A:020	Load encoder/master encoder (SSI) protocol parameters: Encoder type	**Rotative encoder [0]**	U8		C	
0x2C5A:021	Load encoder/master encoder (SSI) protocol parameters: Position raw data scaled by 0x608F	x inc (Read only)	I32	1	X	●
0x2C5A:022	Load encoder/master encoder (SSI) protocol parameters: Monoflop time	**0 µs**	U16	1	C	
0x2C5A:023	Load encoder/master encoder (SSI) protocol parameters: Resulting SSI-telegram cycle time	x.x µs (Read only)	U16	10	X	
0x2C5F	Parameter CRC of load encoder/master encoder	- (Read only)	U32	1	X	
0x2C60	PPI monitoring: Response	**Fault > CiA402 [1]**	U8		-	
0x2C61:001	Pole position identification (360°) settings: Current amplitude	**71 %**	U16	1	C	
0x2C61:002	Pole position identification (360°) settings: Ramp time	**40 s**	U16	1	C	
0x2C61:003	Pole position identification (360°) settings: Direction of rotation	**CW [0]**	U8		C	
0x2C61:004	Pole position identification (360°) settings: Error tolerance	**20 °**	U8	1	-	
0x2C61:005	Pole position identification (360°) settings: Absolute current amplitude	x.xx A (Read only)	U32	100	X	
0x2C62:001	Pole position identification (min. movement) settings: Current amplitude	**25 %**	U16	1	C	
0x2C62:002	Pole position identification (min. movement) settings: Ramp time	**10 s**	U16	1	C	
0x2C62:003	Pole position identification (min. movement) settings: Gain	**0 %**	U16	1	-	
0x2C62:004	Pole position identification (min. movement) settings: Reset time	**62.5 ms**	U16	10	-	
0x2C62:005	Pole position identification (min. movement) settings: Max. move permitted	**20 °**	U8	1	-	
0x2C62:006	Pole position identification (min. movement) settings: Absolute current amplitude	x.xx A (Read only)	U32	100	X	
0x2C63:001	PPI without movement: Execution	**Disabled [0]**	U8		C	
0x2C63:002	PPI without movement: Current adjust factor	**100 %**	U16	1	C	
0x2C64:001	Cable Check: Behavior after switch on	**No action [0]**	U8		C	
0x2C64:002	Cable Check: Status word	- (Read only)	U16		HX	
0x2C65:001	PPI validation: Activation	**Off [0]**	U8		C	
0x2C65:002	PPI validation: Settings	**No action [0]**	U8		X	
0x2C65:003	PPI validation: Status	- (Read only)	U16		HX	●
0x2C65:004	PPI validation: Pole position set value	**0.0 °**	I16	10	-	
0x2C66:001	PPI mode for 0x6060: Selection	**PPI 360° [1]**	U8		C	
0x2C67:001	MOL settings for 0x6060: Current setpoint 1	**71 %**	U16	1	-	
0x2C67:002	MOL settings for 0x6060: Frequency 1	**1.0 Hz**	I16	10	-	
0x2C67:003	MOL settings for 0x6060: Current 1 - ramp time	**10 ms**	U16	1	-	
0x2C67:004	MOL settings for 0x6060: Frequency 1 - ramp time	**200 ms**	U16	1	-	
0x2C67:005	MOL settings for 0x6060: Starting angle 1	**0.0 °**	I16	10	-	
0x2C67:006	MOL settings for 0x6060: Stopping time 1	**10000.0 s**	U32	10	C	
0x2C67:011	MOL settings for 0x6060: Current setpoint 2	**71 %**	U16	1	-	
0x2C67:012	MOL settings for 0x6060: Frequency 2	**5.0 Hz**	I16	10	-	
0x2C67:013	MOL settings for 0x6060: Current 2 - ramp time	**10 ms**	U16	1	-	
0x2C67:014	MOL settings for 0x6060: Frequency 2 - ramp time	**1000 ms**	U16	1	-	
0x2C67:015	MOL settings for 0x6060: Starting angle 2	**0.0 °**	I16	10	-	
0x2C67:016	MOL settings for 0x6060: Stopping time 2	**10000.0 s**	U32	10	C	
0x2D00:001	Touch probe (TP) delay time: Touch probe 1 delay time	**0.000 ms**	U16	1000	-	
0x2D00:002	Touch probe (TP) delay time: Touch probe 2 delay time	**0.000 ms**	U16	1000	-	

Address	Name	Default setting	Data type	Factor	A	M
0x2D00:003	Touch probe (TP) delay time: Touch probe 3 delay time	**0.000 ms**	U16	1000	-	
0x2D00:004	Touch probe (TP) delay time: Touch probe 4 delay time	**0.000 ms**	U16	1000	-	
0x2D01:001	Touch probe (TP) time stamp: Touch probe 1-rising edge time stamp	x ns (Read only)	U32	1	X	●
0x2D01:002	Touch probe (TP) time stamp: Touch probe 1-falling edge time stamp	x ns (Read only)	U32	1	X	●
0x2D01:003	Touch probe (TP) time stamp: Touch probe 2-rising edge time stamp	x ns (Read only)	U32	1	X	●
0x2D01:004	Touch probe (TP) time stamp: Touch probe 2-falling edge time stamp	x ns (Read only)	U32	1	X	●
0x2D01:005	Touch probe (TP) time stamp: Touch probe 3-rising edge time stamp	x ns (Read only)	U32	1	X	●
0x2D01:006	Touch probe (TP) time stamp: Touch probe 3-falling edge time stamp	x ns (Read only)	U32	1	X	●
0x2D01:007	Touch probe (TP) time stamp: Touch probe 4-rising edge time stamp	x ns (Read only)	U32	1	X	●
0x2D01:008	Touch probe (TP) time stamp: Touch probe 4-falling edge time stamp	x ns (Read only)	U32	1	X	●
0x2D02:001	Touch probe diagnostics: Touch probe 3/4 function	**0x0000**	U16		H	●
0x2D02:002	Touch probe diagnostics: Touch-Probe 3/4 status	- (Read only)	U16		HX	●
0x2D03:001	Touch probe position: Touch probe 3 position rising edge	x inc (Read only)	I32	1	X	●
0x2D03:002	Touch probe position: Touch probe 3 position falling edge	x inc (Read only)	I32	1	X	●
0x2D03:003	Touch probe position: Touch probe 4 position rising edge	x inc (Read only)	I32	1	X	●
0x2D03:004	Touch probe position: Touch probe 4 position falling edge	x inc (Read only)	I32	1	X	●
0x2D40:001	Device utilisation ixt: Power unit actual utilisation	x % (Read only)	U16	1	X	●
0x2D40:002	Device utilisation ixt: Power unit warning threshold	**95 %**	U16	1	-	
0x2D40:003	Device utilisation ixt: Power unit error threshold	x % (Read only)	U16	1	X	
0x2D40:004	Device utilisation ixt: Device actual utilisation	x % (Read only)	U16	1	X	●
0x2D40:005	Device utilisation ixt: Device warning threshold	**95 %**	U16	1	-	
0x2D40:006	Device utilisation ixt: Device error threshold	x % (Read only)	U16	1	X	
0x2D40:007	Device utilisation ixt: Actual total utilisation	x % (Read only)	U16	1	X	●
0x2D40:008	Device utilisation ixt: Total utilisation warning threshold	**95 %**	U16	1	-	
0x2D40:009	Device utilisation ixt: Total utilisation error threshold	x % (Read only)	U16	1	X	
0x2D44:001	Overspeed monitoring: Threshold	**8000 rpm**	U16	1	-	
0x2D44:002	Overspeed monitoring: Response	**Fault > CiA402 [1]**	U8		-	
0x2D45:001	Motor phase failure detection: Response - Motor phase 1	**No response [0]**	U8		-	
0x2D45:002	Motor phase failure detection: Current threshold	**5.0 %**	U8	10	-	
0x2D45:003	Motor phase failure detection: Voltage threshold	**10.0 V**	U16	10	-	
0x2D45:004	Motor phase failure detection: Response - Motor phase 2	**No response [0]**	U8		-	
0x2D46:001	Overcurrent monitoring: Threshold	**5.4 A**	U16	10	-	
0x2D46:002	Overcurrent monitoring: Response	**Fault > CiA402 [1]**	U8		-	
0x2D48:002	PTC temperature sensor monitoring: Error response	**Fault > CiA402 [1]**	U8		-	
0x2D49:001	Motor temperature monitoring: Temperature sensor type	**PT1000 [5]**	U8		-	
0x2D49:002	Motor temperature monitoring: Response	**Warning [1]**	U8		-	
0x2D49:003	Motor temperature monitoring: Warning threshold	**145.0 °C**	I16	10	-	
0x2D49:004	Motor temperature monitoring: Error threshold	**155.0 °C**	I16	10	-	
0x2D49:005	Motor temperature monitoring: Actual motor temperature	x.x °C (Read only)	I16	10	X	●

Address	Name	Default setting	Data type	Factor	A	M
0x2D49:006	Motor temperature monitoring: Spec. characteristic temperature grid point 1	**25.0 °C**	I16	10	-	
0x2D49:007	Motor temperature monitoring: Spec. characteristic temperature grid point 2	**150.0 °C**	I16	10	-	
0x2D49:008	Motor temperature monitoring: Spec. characteristic resistance grid point 1	**1000 Ω**	I16	1	-	
0x2D49:009	Motor temperature monitoring: Spec. characteristic resistance grid point 2	**2225 Ω**	I16	1	-	
0x2D49:010	Motor temperature monitoring: Temperature sensor feedback type	**Motor encoder [0]**	U8		-	
0x2D49:011	Motor temperature monitoring: Motor temperature (Motor encoder)	x.x °C (Read only)	I16	10	X	●
0x2D49:012	Motor temperature monitoring: Motor temperature (load encoder)	x.x °C (Read only)	I16	10	X	●
0x2D4C:001	Thermal model motor utilization (i^2xt): Motor utilisation (i^2xt)	**60 s**	U16	1	-	
0x2D4C:002	Thermal model motor utilization (i^2xt): Thermal time constant - laminations	**852 s**	U16	1	-	
0x2D4C:003	Thermal model motor utilization (i^2xt): Winding influence	**27 %**	U8	1	-	
0x2D4C:004	Thermal model motor utilization (i^2xt): Starting value	**0 %**	U16	1	-	
0x2D4D:001	Motor utilisation (i^2xt) - specific characteristic: x1 = n01/nN (n01 ~ 0)	**0 %**	U16	1	-	
0x2D4D:002	Motor utilisation (i^2xt) - specific characteristic: y1 = i01/iN (x1)	**100 %**	U16	1	-	
0x2D4D:003	Motor utilisation (i^2xt) - specific characteristic: x2 = n02/nN (n02 = limit reduced cooling)	**0 %**	U16	1	-	
0x2D4D:004	Motor utilisation (i^2xt) - specific characteristic: y2 = i02/iN (x2)	**100 %**	U16	1	-	
0x2D4D:005	Motor utilisation (i^2xt) - specific characteristic: x3 = n03/nN (n03 = rated speed)	**100 %**	U16	1	-	
0x2D4D:006	Motor utilisation (i^2xt) - specific characteristic: y3 = i03/iN (x3)	**100 %**	U16	1	-	
0x2D4D:007	Motor utilisation (i^2xt) - specific characteristic: x4 = n04/nN (n04 = limit field weakening)	**100 %**	U16	1	-	
0x2D4D:008	Motor utilisation (i^2xt) - specific characteristic: y4 = i04/iN (x4)	**100 %**	U16	1	-	
0x2D4E	Motor utilisation (i^2xt) - warning threshold	**100 %**	U16	1	-	
0x2D4F	Motor utilisation (i^2xt)	x % (Read only)	U16	1	X	●
0x2D50:001	Motor utilisation (i^2xt) - monitoring: Error response	**Fehler > CiA402 [1]**	U8		-	
0x2D50:002	Motor utilisation (i^2xt) - monitoring: Error threshold	**105 %**	U16	1	-	
0x2D51:001	Position error/speed error - monitoring: Speed error - error threshold	**50 rpm**	U32	1	-	
0x2D51:002	Position error/speed error - monitoring: Speed error - min. time for error	**0 ms**	U16	1	-	
0x2D51:003	Position error/speed error - monitoring: Speed error - error response	**No response [0]**	U8		-	
0x2D51:004	Position error/speed error - monitoring: Position error - error threshold	**360 °**	U32	1	-	
0x2D51:005	Position error/speed error - monitoring: Position error - min. time for error	**0 ms**	U16	1	-	
0x2D51:006	Position error/speed error - monitoring: Position error - error response	**No response [0]**	U8		-	
0x2D66:001	Mains failure control: Enable function	**Disabled [0]**	U8		-	
0x2D66:002	Mains failure control: DC-bus activation level	**75 %**	U8	1	-	
0x2D66:011	Mains failure control: Filter time	**0.00 s**	U16	100	-	
0x2D66:012	Mains failure control: Ramp max. torque	**30.0 %**	U16	10	-	
0x2D66:013	Mains failure control: Ramp time	**1.00 s**	U16	100	-	

Address	Name	Default setting	Data type	Factor	A	M
0x2D66:014	Mains failure control: Actual DC bus voltage (filtered)	x.xxx V (Read only)	U32	1000	X	
0x2D81:001	Life-diagnosis: Operating time	x s (Read only)	U32	1	X	
0x2D81:002	Life-diagnosis: Power-on time	x s (Read only)	U32	1	X	
0x2D81:004	Life-diagnosis: Main switching cycles	- (Read only)	U32	1	X	
0x2D81:006	Life-diagnosis: Short-circuit counter	- (Read only)	U32	1	X	
0x2D81:007	Life-diagnosis: Earth fault counter	- (Read only)	U32	1	X	
0x2D81:009	Life-diagnosis: Fan operating time	x s (Read only)	U32	1	X	
0x2D82	Motor actual voltage (Veff)	x.x V (Read only)	U32	10	X	●
0x2D83:001	Motor-Phasenströme: Zero system current	x.xx A (Read only)	I32	100	X	●
0x2D83:002	Motor-Phasenströme: Phase U current	x.xx A (Read only)	I32	100	X	●
0x2D83:003	Motor-Phasenströme: Phase V current	x.xx A (Read only)	I32	100	X	●
0x2D83:004	Motor-Phasenströme: Phase W current	x.xx A (Read only)	I32	100	X	●
0x2D84:001, 004, 006	Heatsink temperature: Heatsink temperature	x.x °C (Read only)	I16	10	X	
0x2D84:002	Heatsink temperature: Warning threshold	**90.0 °C**	I16	10	-	
0x2D8A	Actual speed error	x rpm (Read only)	I32	1	X	●
0x2DA2:001	Output power: Effective power	x.xxx kW (Read only)	I32	1000	X	●
0x2DA3:003	Output energy: Overall energy	**0.00 kWh**	I32	100	X	
0x2DA4:001	Diagnostics of analog input 1: Value in percent	x.x % (Read only)	I16	10	X	
0x2DA4:005	Diagnostics of analog input 1: Scaled percent value	x.xx % (Read only)	I16	100	X	●
0x2DA4:016	Diagnostics of analog input 1: Status	- (Read only)	U16		HX	●
0x2DD0:001	Field values: Actual value	x % (Read only)	U16	1	X	●
0x2DD0:002	Field values: Setpoint value	x % (Read only)	U16	1	X	●
0x2DD1:001	Motor currents: Actual D-current (id)	x.xx A (Read only)	I32	100	X	●
0x2DD1:002	Motor currents: Actual Q-current (iq)	x.xx A (Read only)	I32	100	X	●
0x2DD1:003	Motor currents: Setpoint D-current (id)	x.xx A (Read only)	I32	100	X	●
0x2DD1:004	Motor currents: Setpoint Q-current (iq)	x.xx A (Read only)	I32	100	X	●
0x2DD1:005	Motor currents: Motor current (Ieff)	x.xx A (Read only)	I32	100	X	●
0x2DD2	Target position interpolated	x inc (Read only)	I32	1	X	●
0x2DD3:001	Speed setpoints: Speed setpoint	x rpm (Read only)	I32	1	X	●
0x2DD3:002	Speed setpoints: Speed setpoint 2	x rpm (Read only)	I32	1	X	●
0x2DD3:003	Speed setpoints: Speed setpoint limited	x rpm (Read only)	I32	1	X	●
0x2DD4:001	Speed controller output signals: Output signal 1	x.x % (Read only)	I16	10	X	●
0x2DD4:002	Speed controller output signals: Output signal 2	x.x % (Read only)	I16	10	X	●
0x2DD5	Torque setpoint	x.xx Nm (Read only)	I32	100	X	●
0x2DD6:001	Torque filter cascade: Starting value	x.x % (Read only)	I16	10	X	●
0x2DD6:002	Torque filter cascade: Notch filter 1 input value	x.x % (Read only)	I16	10	X	●
0x2DD6:003	Torque filter cascade: Notch filter 2 input value	x.x % (Read only)	I16	10	X	●
0x2DD6:004	Torque filter cascade: Torque setpoint filtered	x.x % (Read only)	I16	10	X	●
0x2DD7:001	Voltage values: Actual voltage (motor voltage limit)	x.x V (Read only)	I16	10	X	●
0x2DD7:002	Voltage values: Output signal D current controller	x.x V (Read only)	I16	10	X	●
0x2DD7:003	Voltage values: Output signal Q current controller	x.x V (Read only)	I16	10	X	●
0x2DD7:004	Voltage values: D voltage (magnetisation)	x.x V (Read only)	I16	10	X	●
0x2DD7:005	Voltage values: Q voltage (torque)	x.x V (Read only)	I16	10	X	●
0x2DD7:006	Voltage values: Phases U-V	x.x V (Read only)	I16	10	X	●
0x2DD7:007	Voltage values: Phases V-W	x.x V (Read only)	I16	10	X	●
0x2DD7:008	Voltage values: Phases W-U	x.x V (Read only)	I16	10	X	●
0x2DD7:009	Voltage values: Phase U	x.x V (Read only)	I16	10	X	●
0x2DD7:010	Voltage values: Phase V	x.x V (Read only)	I16	10	X	●
0x2DD7:011	Voltage values: Phase W	x.x V (Read only)	I16	10	X	●
0x2DDC	Actual slip value	x.x Hz (Read only)	I16	10	X	●
0x2DDD	Output frequency	x.x Hz (Read only)	I16	10	X	●
0x2DDE	Actual rotor angle position	- (Read only)	I16	1	X	●
0x2DDF:001	Axis information: Rated current	x.xx A (Read only)	U16	100	X	●

Address	Name	Default setting	Data type	Factor	A	M
0x2DDF:002	Axis information: Maximum current	x.xx A (Read only)	U16	100	X	●
0x2DDF:005	Axis information: Detected module in slot A	- (Read only)	U8		X	●
0x2DDF:006	Axis information: Detected module in slot B	- (Read only)	U8		X	●
0x2DDF:007	Axis information: Function of X109	- (Read only)	U8		X	●
0x2DE0:001	Current controller identification settings	**Automatic [0]**	U8		X	
0x2DE0:003	Resolver - position detection dynamics	**100 %**	U16	1	-	
0x2DE0:004	Resolver - 8 kHz safety signal	**Automatisch durch Gerätetyp [0]**	U8		X	
0x2DE0:006	OEM service Data - SN	- (Read only)	U32	1	X	
0x2DE0:007	Use measured voltage	**On [1]**	U8		-	
0x2DE0:009	Motor identification settings	- (Read only)	U32	1	X	
0x2DE0:014	Overwrite bit 4 of CiA control word	**No overwrite [0]**	U8		-	
0x2DE0:026	Actual speed filter time	**10.0 ms**	U16	10	-	
0x2DE1:001	Axis settings: Function of X109	**PTC [20]**	U8		-	
0x4000	Application selection	**"Speed Control" technology application [10]**	U16		C	
0x4001	Interface selection	**Fieldbus network [0]**	I16		-	
0x4016:005	Digital output 1: Terminal state	- (Read only)	U8		X	
0x500A:004	PLCopen status	- (Read only)	U16		X	
0x500A:005	Status word	- (Read only)	U32		HX	
0x500A:008	Control word	**0x0000**	U16		HX	
0x500A:010	Actual position	- (Read only)	I32	10000	X	
0x500A:011	Actual velocity	- (Read only)	I32	10000	X	
0x500A:012	Actual acceleration	- (Read only)	I32	100	X	
0x500A:013	Actual torque	x.xx Nm (Read only)	I32	100	X	
0x500A:014	Set position	- (Read only)	I32	10000	X	
0x500A:015	Velocity setpoint	- (Read only)	I32	10000	X	
0x500A:016	Acceleration setpoint	- (Read only)	I32	100	X	
0x500A:017	Torque setpoint	x.xx Nm (Read only)	I32	100	X	
0x500A:025	Additional gearbox factor - numerator	**1**	U32	1	C	
0x500A:026	Additional gearbox factor - denominator	**1**	U32	1	C	
0x500A:029	Virtual mode	**0**	BOOLEAN		C	
0x500A:030	Travel range	**Modulo [0]**	U16		C	
0x500A:031	Cycle length	**360.0000**	I32	10000	C	
0x500A:032	Feed constant	**360.0000**	I32	10000	C	
0x500A:033	Gearbox factor - nominator	**1**	U32	1	C	
0x500A:034	Gearbox factor - denominator	**1**	U32	1	C	
0x500A:035	Motor mounting direction	**0**	BOOLEAN		C	
0x500A:037	Load moment of inertia	**0.00 kg cm²**	I32	100	-	
0x500A:045	Max. velocity	**0.0000**	I32	10000	-	
0x500A:046	Max. acceleration	**0.00**	I32	100	-	
0x500A:047	Max. jerk	**0.00**	I32	100	-	
0x500A:048	Application quick stop - deceleration	**3600.00**	I32	100	-	
0x500A:049	Application quick stop - jerk	**0.00**	I32	100	-	
0x500A:050	Enable software limit switches	**0**	BOOLEAN		-	
0x500A:051	Software limit switch positive	**0.0000**	I32	10000	-	
0x500A:052	Software limit switch negative	**0.0000**	I32	10000	-	
0x500A:053	Action after "software limit switch reached"	**Stop at software limit switch [1]**	U16		-	
0x500A:054	Following error monitoring	**1**	BOOLEAN		-	
0x500A:055	Following error: Warning threshold	**180.0000**	I32	10000	-	
0x500A:056	Following error: Error threshold	**360.0000**	I32	10000	-	
0x500A:057	Actual following error	- (Read only)	I32	10000	X	
0x500A:058	Max. following error	- (Read only)	I32	10000	X	
0x500A:059	Response to following error	**Fault > Application quick stop > Quick stop [20]**	U8		-	
0x500A:067	M-S compensation: Mode	**Off [0]**	U16		C	

Address	Name	Default setting	Data type	Factor	A	M
0x500A:068	M-S compensation: Time offset	**0.000 ms**	I32	1000	-	
0x500A:070	Homing mode	**SetPositionDirect [0]**	I16		-	
0x500A:071	Action after "Home position detected"	**Stop positioning [0]**	I16		-	
0x500A:072	Homing: Target position	**0.0000**	I32	10000	-	
0x500A:073	Homing: Velocity 1	**360.0000**	I32	10000	-	
0x500A:074	Homing: Velocity 2	**0.0000**	I32	10000	-	
0x500A:075	Homing: Acceleration 1	**720.00**	I32	100	-	
0x500A:076	Homing: Acceleration 2	**360.00**	I32	100	-	
0x500A:077	Homing: Jerk	**7200.00**	I32	100	-	
0x500A:078	Homing: Torque limit	**0.10 Nm**	I32	100	-	
0x500A:079	Homing: Blocking time	**1.000 s**	I32	1000	-	
0x500A:080	Homing: Touch probe configuration	**TP1 - positive edge [1]**	U32		-	
0x500A:081	Home position after mains switching	**0**	BOOLEAN		-	
0x500A:082	Max. angle of rotation after mains switching	**0.0000000000 °**	I32	1	-	
0x500A:084	Home position	**0.0000**	I32	10000	-	
0x500A:086	Homing: Offset position	**0.0000**	I32	10000	-	
0x500A:087	Homing: Absolute positioning direction	**Current direction [0]**	I16		-	
0x500A:090	Default control mode	**Speed control via motor encoder [10]**	U16		C	
0x500A:091	Actual control mode	- (Read only)	U16		X	
0x500A:092	Load encoder selection	**[-]**	STRING[80]		C	
0x500A:093	Position controller gain	**20.0000 1/s**	I32	10000	-	
0x500A:094	Load encoder output limit	**100000.0000**	I32	10000	-	
0x500A:095	Position controller output	- (Read only)	I32	10000	X	
0x500A:104	Response to hardware limit switch error	**Fault > Application quick stop > Quick stop [19]**	U8		-	
0x500A:105	Response to software limit switch error	**Fault > Application quick stop > Quick stop [19]**	U8		-	
0x500A:106	Response to error "max. values exceeded"	**Warning [2]**	U8		-	
0x500A:107	Response to inverter disable during operation	**No response [0]**	U8		-	
0x500A:121	Execute brake test	**Off / ready [0]**	U8		X	
0x500A:128	Positive torque limit	**200.0 %**	I16	10	-	
0x500A:129	Negative torque limit	**200.0 %**	I16	10	-	
0x500A:130	Position window size	**0.0000**	I32	10000	-	
0x500A:131	Position window dwell time	**0.000 s**	I32	1000	-	
0x500A:132	Standstill window size (motor encoder)	**0.0000**	I32	10000	-	
0x500A:135	Modulo positioning tolerance window	**0.0000**	I32	10000	-	
0x500A:136	Tolerance window actual position=set position upper limit	**0.0000**	I32	10000	-	
0x500A:137	Tolerance window actual position=set position lower limit	**0.0000**	I32	10000	-	
0x500A:150	SLS1	**0.0000**	I32	10000	-	
0x500A:151	SLS1 - deceleration time	**0.000 s**	I32	1000	-	
0x500A:152	SLS2	**0.0000**	I32	10000	-	
0x500A:153	SLS2 - deceleration time	**0.000 s**	I32	1000	-	
0x500A:154	SLS3	**0.0000**	I32	10000	-	
0x500A:155	SLS3 - deceleration time	**0.000 s**	I32	1000	-	
0x500A:156	SLS4	**0.0000**	I32	10000	-	
0x500A:157	SLS4 - deceleration time	**0.000 s**	I32	1000	-	
0x500A:159	Compensation velocity of SLS	**0.0000**	I32	10000	-	
0x500A:160	Follower - Response to SLS	**0**	BOOLEAN		-	
0x500A:161	Speed controller limitation (SLS)	**0**	BOOLEAN		-	
0x500A:162	Deactivate safety interface	**0x00000000**	U32		H	
0x500A:163	Limiter status	- (Read only)	U32		HX	
0x500A:181	Manual jog velocity	**360.0000**	I32	10000	-	
0x500A:182	Manual jog acceleration	**720.00**	I32	100	-	

Address	Name	Default setting	Data type	Factor	A	M
0x500A:183	Manual jog deceleration	**1440.00**	I32	100	-	
0x500A:184	Manual jog jerk	**0.00**	I32	100	-	
0x500A:186	Deceleration of Halt	**1800.00**	I32	100	-	
0x500A:187	Jerk of Halt	**0.00**	I32	100	-	
0x500B:005	Status word	- (Read only)	U32		HX	
0x500B:010	Actual position	- (Read only)	I32	10000	X	
0x500B:011	Actual velocity	- (Read only)	I32	10000	X	
0x500B:012	Actual acceleration	- (Read only)	I32	100	X	
0x500B:030	Travel range	**Modulo [0]**	U16		C	
0x500B:031	Cycle length	**360.0000**	I32	10000	C	
0x500B:032	Feed constant	**360.0000**	I32	10000	C	
0x500B:033	Gearbox factor - nominator	**1**	U32	1	C	
0x500B:034	Gearbox factor - denominator	**1**	U32	1	C	
0x500B:035	Load encoder mounting direction	**0**	BOOLEAN		C	
0x500B:045	Max. velocity	**0.0000**	I32	10000	-	
0x500B:065	Filter cycles of actual velocity	**1**	U16	1	-	
0x500B:066	Filter cycles of actual position	**1**	U16	1	-	
0x500B:067	M-S compensation: Mode	**Off [0]**	U16		C	
0x500B:068	M-S compensation: Time offset	**0.000 ms**	I32	1000	-	
0x500B:069	Update cycle for SSI encoder	**0.000 ms**	U32	1000	C	
0x500B:081	Home position after mains switching	**0**	BOOLEAN		-	
0x500B:082	Max. angle of rotation after mains switching	**0.0000000000 °**	I32	1	-	
0x500B:100	Setpoint monitoring	**0**	BOOLEAN		-	
0x500B:132	Standstill window size (load encoder)	**0.0000**	I32	10000	-	
0x5020:004	Source of positive hardware limit switch	**Digital input 4 [5]**	I16		-	
0x5020:005	Source of negative hardware limit switch	**Digital input 3 [4]**	I16		-	
0x5020:006	Source of homing switch	**Digital input 1 [2]**	I16		-	
0x5020:007	Application quick stop source	**FALSE [0]**	I16		-	
0x5020:008	Source of fault reset	**FALSE [0]**	I16		-	
0x5020:009	Reference velocity for analog input 1	**500.0000**	I32	10000	-	
0x5020:011	TP1 source	**Digital input 2, positive edge [11]**	I16		-	
0x5020:030	Source of digital output 1	**Ready to switch on [0]**	I16		-	
0x5020:040	Source of PID set value	**PID set value - Preset 1 [3]**	U16		-	
0x5020:041	Source of PID actual value	**Analog input 1 [2]**	U16		-	
0x5020:042	PID set value - Preset 1	**0.0000**	I32	10000	-	
0x5021:150	System bus diagnostics: Cycle length (input value)	- (Read only)	I32	10000	X	
0x5021:151	System bus diagnostics: Position (input value)	- (Read only)	I32	10000	X	
0x5021:152	System bus diagnostics: Velocity (input value)	- (Read only)	I32	10000	X	
0x5021:153	System bus diagnostics: Acceleration (input value)	- (Read only)	I32	100	X	
0x5021:154	System bus diagnostics: Torque (input value)	x.xxxx Nm (Read only)	I32	10000	X	
0x5021:155	System bus diagnostics: Time stamp (input value)	x ns (Read only)	U32	1	X	
0x5021:156	System bus diagnostics: Input data word 6	- (Read only)	U32	1	X	
0x5021:157	System bus diagnostics: Input data word 7	- (Read only)	U32	1	X	
0x5021:160	System bus diagnostics: Cycle length (output value)	- (Read only)	I32	10000	X	
0x5021:161	System bus diagnostics: Position (output value)	- (Read only)	I32	10000	X	
0x5021:162	System bus diagnostics: Velocity (output value)	- (Read only)	I32	10000	X	
0x5021:163	System bus diagnostics: Acceleration (output value)	- (Read only)	I32	100	X	
0x5021:164	System bus diagnostics: Torque (output value)	x.xxxx Nm (Read only)	I32	10000	X	
0x5021:165	System bus diagnostics: Time stamp (output value)	x ns (Read only)	U32	1	X	
0x5021:166	System bus diagnostics: Output data word 6	- (Read only)	U32	1	X	
0x5021:167	System bus diagnostics: Output data word 7	- (Read only)	U32	1	X	
0x5025:001	Simulation of control signals	**0x00**	U8		HX	
0x5025:010	Control signals	**0x00000000**	U32		HX	
0x5025:101	Simulation of status signals	**0x00**	U8		HX	
0x5025:110	Status signals	**0x00000000**	U32		HX	

Address	Name	Default setting	Data type	Factor	A	M
0x5026:001	Direct drive type	**[0]**	I16		C	
0x5026:002	Linear motor rated force	x.xx N (Read only)	I32	100	X	
0x5026:003	Linear motor rated force constant	**0.00**	I32	100	C	
0x5026:004	Linear motor actual force	x.xx N (Read only)	I32	100	X	
0x5026:005	Linear motor rated velocity	- (Read only)	I32	10000	X	
0x5026:010	Short circuit braking test	**[0]**	I16		-	
0x5026:011	Short circuit braking activation threshold	**20.00 %**	I32	100	-	
0x5030:001	Simulation of control signals	**0x00**	U8		HX	
0x5030:003	Effect of external torque limit	**Positive and negative direction [0]**	I16		-	
0x5030:004	Internal velocity offset	**0.0000**	I32	10000	-	
0x5030:005	Internal velocity override	**100.00 %**	I32	100	-	
0x5030:006	Display value 1	**None [0]**	U16		-	
0x5030:007	Display value 2	**None [0]**	U16		-	
0x5030:010	Control signals	**0x00000000**	U32		HX	
0x5030:011	External velocity override	**0.00 %**	I32	100	X	
0x5030:012	External velocity	**0.0000**	I32	10000	X	
0x5030:013	External velocity offset	**0.0000**	I32	10000	X	
0x5030:014	External acceleration	**0.00**	I32	100	X	
0x5030:015	External deceleration	**0.00**	I32	100	X	
0x5030:016	External jerk	**0.00**	I32	100	X	
0x5030:017	External torque limit	**0.00 %**	I32	100	X	
0x5030:101	Simulation of status signals	**0x00**	U8		HX	
0x5030:110	Status signals	**0x00000000**	U32		HX	
0x5030:111	Status signals limiter	**0x00000000**	U32		HX	
0x5030:112	Actual velocity	**0.0000**	I32	10000	X	
0x5030:113	Status word 3 (reserved)	**0.0000**	I32	10000	X	
0x5030:114	Error code	**0**	U32	1	X	
0x5030:115	Actual torque	**0.0000 Nm**	I32	10000	X	
0x5030:116	Display value 1	**0**	U32	1	X	
0x5030:117	Display value 2	**0**	U32	1	X	
0x5031:003	Velocity profile 0	**0.0000**	I32	10000	-	
0x5031:004	Acceleration profile 0	**100.00**	I32	100	-	
0x5031:005	Deceleration profile 0	**100.00**	I32	100	-	
0x5031:006	Jerk profile 0	**100000.00**	I32	100	-	
0x5031:023, 034, 045, 056, 067, 078, 089, 100, 111, 122, 133, 144, 155, 166, 177	Profile velocity	**0.0000**	I32	10000	-	
0x5031:024, 035, 046, 057, 068, 079, 090, 101, 112, 123, 134, 145, 156, 167, 178	Profile acceleration	**100.00**	I32	100	-	
0x5031:025, 036, 047, 058, 069, 080, 091, 102, 113, 124, 135, 146, 157, 168, 179	Profile deceleration	**100.00**	I32	100	-	
0x5031:026, 037, 048, 059, 070, 081, 092, 103, 114, 125, 136, 147, 158, 169, 180	Profile jerk	**100000.00**	I32	100	-	

Address	Name	Default setting	Data type	Factor	A	M
0x5031:200	Enable PID controller	**0**	BOOLEAN		-	
0x5031:201	PID set reference	**1.0000**	I32	10000	-	
0x5031:202	PID actual reference	**1.0000**	I32	10000	-	
0x5031:203	PID set offset	**0.0000**	I32	10000	-	
0x5031:204	PID actual offset	**0.0000**	I32	10000	-	
0x5031:205	PID influence	**0.00 %**	I32	100	-	
0x5031:206	PID gain (P-component)	**1.0000**	I32	10000	-	
0x5031:207	PID gain adaptation	**100.00 %**	I32	100	-	
0x5031:208	PID reset time (I-component)	**1.0000 s**	I32	10000	-	
0x5031:209	PID rate time (D-component)	**0.0000 s**	I32	10000	-	
0x5031:210	Load PID integrator	**0**	BOOLEAN		-	
0x5031:211	PID integrator value	**0.0000**	I32	10000	-	
0x5031:214	PID set ramp time	**0.000 s**	I32	1000	-	
0x5031:215	PID output - Positive limit	**100.00 %**	I32	100	-	
0x5031:216	PID output - Negative limit	**100.00 %**	I32	100	-	
0x5031:217	PID actual filter time	**0.005 s**	I32	1000	-	
0x5031:218	PID set filter time	**0.000 s**	I32	1000	-	
0x5032:011	Active Profile	- (Read only)	U16	1	X	
0x5032:012	Active profile: acceleration setpoint	- (Read only)	I32	100	X	
0x5032:013	Active profile: deceleration setpoint	- (Read only)	I32	100	X	
0x5032:014	Active profile: jerk setpoint	- (Read only)	I32	100	X	
0x5032:015	Active profile: Velocity setpoint	- (Read only)	I32	10000	X	
0x5032:016	External velocity setpoint	- (Read only)	I32	10000	X	
0x5032:017	Active set velocity	- (Read only)	I32	10000	X	
0x5032:018	Set velocity with sign	- (Read only)	I32	10000	X	
0x5032:019	Velocity setpoint with offset	- (Read only)	I32	10000	X	
0x5032:021	Velocity setpoint	- (Read only)	I32	10000	X	
0x5032:022	Acceleration setpoint	- (Read only)	I32	100	X	
0x5032:023	Deceleration setpoint	- (Read only)	I32	100	X	
0x5032:024	Jerk setpoint	- (Read only)	I32	100	X	
0x5032:025	Selected profile	- (Read only)	U16	1	X	
0x5032:026	Velocity offset setpoint	- (Read only)	I32	10000	X	
0x5032:027	Velocity override setpoint	- (Read only)	I32	100	X	
0x5032:028	Set velocity	- (Read only)	I32	10000	X	
0x5032:029	Direction of rotation inverted	- (Read only)	BOOLEAN	1	X	
0x5032:031	PID set value	- (Read only)	I32	10000	X	
0x5032:032	PID set value (scaled)	x.xx % (Read only)	I32	100	X	
0x5032:033	PID actual value	- (Read only)	I32	10000	X	
0x5032:034	PID actual value (scaled)	x.xx % (Read only)	I32	100	X	
0x5032:035	PID velocity output value	- (Read only)	I32	10000	X	
0x5032:036	PID output (scaled)	x.xx % (Read only)	I32	100	X	
0x5810:001	Application diagnostics: Application state	- (Read only)	U8		X	
0x5850:001	EtherCAT master commands: Kommunikation neu starten	**No action/no error [0]**	U16		X	
0x5851:001	EtherCAT master diagnosis: EtherCAT master state	- (Read only)	U16		X	
0x5851:002	EtherCAT master diagnosis: EtherCAT master state summary	- (Read only)	U32		HX	
0x5851:003	EtherCAT master diagnosis: EtherCAT error	- (Read only)	U16	1	X	
0x5851:004	EtherCAT master diagnosis: Bus scan match	- (Read only)	U8	1	X	
0x5851:005	EtherCAT master diagnosis: Configured cycle time	x µs (Read only)	U32	1	X	
0x5851:006	EtherCAT master diagnosis: Connected slaves	- (Read only)	U16	1	X	
0x5851:007	EtherCAT master diagnosis: Configured slaves	- (Read only)	U16	1	X	
0x5860:001	EtherCAT slaves station addresses: Station address slave 1	- (Read only)	I16	1	X	

Address	Name	Default setting	Data type	Factor	A	M
0x5860:002	EtherCAT slaves station addresses: Station address slave 2	- (Read only)	I16	1	X	
0x5860:003	EtherCAT slaves station addresses: Station address slave 3	- (Read only)	I16	1	X	
0x5860:004	EtherCAT slaves station addresses: Station address slave 4	- (Read only)	I16	1	X	
0x5860:005	EtherCAT slaves station addresses: Station address slave 5	- (Read only)	I16	1	X	
0x5860:006	EtherCAT slaves station addresses: Station address slave 6	- (Read only)	I16	1	X	
0x5860:007	EtherCAT slaves station addresses: Station address slave 7	- (Read only)	I16	1	X	
0x5860:008	EtherCAT slaves station addresses: Station address slave 8	- (Read only)	I16	1	X	
0x5860:009	EtherCAT slaves station addresses: Station address slave 9	- (Read only)	I16	1	X	
0x5860:010	EtherCAT slaves station addresses: Station address slave 10	- (Read only)	I16	1	X	
0x5860:011	EtherCAT slaves station addresses: Station address slave 11	- (Read only)	I16	1	X	
0x5860:012	EtherCAT slaves station addresses: Station address slave 12	- (Read only)	I16	1	X	
0x5860:013	EtherCAT slaves station addresses: Station address slave 13	- (Read only)	I16	1	X	
0x5860:014	EtherCAT slaves station addresses: Station address slave 14	- (Read only)	I16	1	X	
0x5860:015	EtherCAT slaves station addresses: Station address slave 15	- (Read only)	I16	1	X	
0x5860:016	EtherCAT slaves station addresses: Station address slave 16	- (Read only)	I16	1	X	
0x5861:001	EtherCAT slaves device names: Device name slave 1	- (Read only)	STRING[128]		X	
0x5861:002	EtherCAT slaves device names: Device name slave 2	- (Read only)	STRING[128]		X	
0x5861:003	EtherCAT slaves device names: Device name slave 3	- (Read only)	STRING[128]		X	
0x5861:004	EtherCAT slaves device names: Device name slave 4	- (Read only)	STRING[128]		X	
0x5861:005	EtherCAT slaves device names: Device name slave 5	- (Read only)	STRING[128]		X	
0x5861:006	EtherCAT slaves device names: Device name slave 6	- (Read only)	STRING[128]		X	
0x5861:007	EtherCAT slaves device names: Device name slave 7	- (Read only)	STRING[128]		X	
0x5861:008	EtherCAT slaves device names: Device name slave 8	- (Read only)	STRING[128]		X	
0x5861:009	EtherCAT slaves device names: Device name slave 9	- (Read only)	STRING[128]		X	
0x5861:010	EtherCAT slaves device names: Device name slave 10	- (Read only)	STRING[128]		X	
0x5861:011	EtherCAT slaves device names: Device name slave 11	- (Read only)	STRING[128]		X	
0x5861:012	EtherCAT slaves device names: Device name slave 12	- (Read only)	STRING[128]		X	
0x5861:013	EtherCAT slaves device names: Device name slave 13	- (Read only)	STRING[128]		X	
0x5861:014	EtherCAT slaves device names: Device name slave 14	- (Read only)	STRING[128]		X	
0x5861:015	EtherCAT slaves device names: Device name slave 15	- (Read only)	STRING[128]		X	
0x5861:016	EtherCAT slaves device names: Device name slave 16	- (Read only)	STRING[128]		X	
0x5862:001	EtherCAT slaves device types: Device type slave 1	- (Read only)	STRING[50]		X	
0x5862:002	EtherCAT slaves device types: Device type slave 2	- (Read only)	STRING[50]		X	
0x5862:003	EtherCAT slaves device types: Device type slave 3	- (Read only)	STRING[50]		X	
0x5862:004	EtherCAT slaves device types: Device type slave 4	- (Read only)	STRING[50]		X	
0x5862:005	EtherCAT slaves device types: Device type slave 5	- (Read only)	STRING[50]		X	
0x5862:006	EtherCAT slaves device types: Device type slave 6	- (Read only)	STRING[50]		X	

Address	Name	Default setting	Data type	Factor	A	M
0x5862:007	EtherCAT slaves device types: Device type slave 7	- (Read only)	STRING[50]		X	
0x5862:008	EtherCAT slaves device types: Device type slave 8	- (Read only)	STRING[50]		X	
0x5862:009	EtherCAT slaves device types: Device type slave 9	- (Read only)	STRING[50]		X	
0x5862:010	EtherCAT slaves device types: Device type slave 10	- (Read only)	STRING[50]		X	
0x5862:011	EtherCAT slaves device types: Device type slave 11	- (Read only)	STRING[50]		X	
0x5862:012	EtherCAT slaves device types: Device type slave 12	- (Read only)	STRING[50]		X	
0x5862:013	EtherCAT slaves device types: Device type slave 13	- (Read only)	STRING[50]		X	
0x5862:014	EtherCAT slaves device types: Device type slave 14	- (Read only)	STRING[50]		X	
0x5862:015	EtherCAT slaves device types: Device type slave 15	- (Read only)	STRING[50]		X	
0x5862:016	EtherCAT slaves device types: Device type slave 16	- (Read only)	STRING[50]		X	
0x5863:001	Mandatory EtherCAT slaves: Slave 1 is mandatory	- (Read only)	U8		X	
0x5863:002	Mandatory EtherCAT slaves: Slave 2 is mandatory	- (Read only)	U8		X	
0x5863:003	Mandatory EtherCAT slaves: Slave 3 is mandatory	- (Read only)	U8		X	
0x5863:004	Mandatory EtherCAT slaves: Slave 4 is mandatory	- (Read only)	U8		X	
0x5863:005	Mandatory EtherCAT slaves: Slave 5 is mandatory	- (Read only)	U8		X	
0x5863:006	Mandatory EtherCAT slaves: Slave 6 is mandatory	- (Read only)	U8		X	
0x5863:007	Mandatory EtherCAT slaves: Slave 7 is mandatory	- (Read only)	U8		X	
0x5863:008	Mandatory EtherCAT slaves: Slave 8 is mandatory	- (Read only)	U8		X	
0x5863:009	Mandatory EtherCAT slaves: Slave 9 is mandatory	- (Read only)	U8		X	
0x5863:010	Mandatory EtherCAT slaves: Slave 10 is mandatory	- (Read only)	U8		X	
0x5863:011	Mandatory EtherCAT slaves: Slave 11 is mandatory	- (Read only)	U8		X	
0x5863:012	Mandatory EtherCAT slaves: Slave 12 is mandatory	- (Read only)	U8		X	
0x5863:013	Mandatory EtherCAT slaves: Slave 13 is mandatory	- (Read only)	U8		X	
0x5863:014	Mandatory EtherCAT slaves: Slave 14 is mandatory	- (Read only)	U8		X	
0x5863:015	Mandatory EtherCAT slaves: Slave 15 is mandatory	- (Read only)	U8		X	
0x5863:016	Mandatory EtherCAT slaves: Slave 16 is mandatory	- (Read only)	U8		X	
0x5864:001	EtherCAT slaves initialisation status: Initalisation status slave 1	- (Read only)	U16		X	
0x5864:002	EtherCAT slaves initialisation status: Initalisation status slave 2	- (Read only)	U16		X	
0x5864:003	EtherCAT slaves initialisation status: Initalisation status slave 3	- (Read only)	U16		X	
0x5864:004	EtherCAT slaves initialisation status: Initalisation status slave 4	- (Read only)	U16		X	
0x5864:005	EtherCAT slaves initialisation status: Initalisation status slave 5	- (Read only)	U16		X	
0x5864:006	EtherCAT slaves initialisation status: Initalisation status slave 6	- (Read only)	U16		X	
0x5864:007	EtherCAT slaves initialisation status: Initalisation status slave 7	- (Read only)	U16		X	
0x5864:008	EtherCAT slaves initialisation status: Initalisation status slave 8	- (Read only)	U16		X	
0x5864:009	EtherCAT slaves initialisation status: Initalisation status slave 9	- (Read only)	U16		X	
0x5864:010	EtherCAT slaves initialisation status: Initalisation status slave 10	- (Read only)	U16		X	
0x5864:011	EtherCAT slaves initialisation status: Initalisation status slave 11	- (Read only)	U16		X	
0x5864:012	EtherCAT slaves initialisation status: Initalisation status slave 12	- (Read only)	U16		X	
0x5864:013	EtherCAT slaves initialisation status: Initalisation status slave 13	- (Read only)	U16		X	
0x5864:014	EtherCAT slaves initialisation status: Initalisation status slave 14	- (Read only)	U16		X	
0x5864:015	EtherCAT slaves initialisation status: Initalisation status slave 15	- (Read only)	U16		X	
0x5864:016	EtherCAT slaves initialisation status: Initalisation status slave 16	- (Read only)	U16		X	

Address	Name	Default setting	Data type	Factor	A	M
0x5865:001	EtherCAT slaves device status: Device status slave 1	- (Read only)	U16		X	
0x5865:002	EtherCAT slaves device status: Device status slave 2	- (Read only)	U16		X	
0x5865:003	EtherCAT slaves device status: Device status slave 3	- (Read only)	U16		X	
0x5865:004	EtherCAT slaves device status: Device status slave 4	- (Read only)	U16		X	
0x5865:005	EtherCAT slaves device status: Device status slave 5	- (Read only)	U16		X	
0x5865:006	EtherCAT slaves device status: Device status slave 6	- (Read only)	U16		X	
0x5865:007	EtherCAT slaves device status: Device status slave 7	- (Read only)	U16		X	
0x5865:008	EtherCAT slaves device status: Device status slave 8	- (Read only)	U16		X	
0x5865:009	EtherCAT slaves device status: Device status slave 9	- (Read only)	U16		X	
0x5865:010	EtherCAT slaves device status: Device status slave 10	- (Read only)	U16		X	
0x5865:011	EtherCAT slaves device status: Device status slave 11	- (Read only)	U16		X	
0x5865:012	EtherCAT slaves device status: Device status slave 12	- (Read only)	U16		X	
0x5865:013	EtherCAT slaves device status: Device status slave 13	- (Read only)	U16		X	
0x5865:014	EtherCAT slaves device status: Device status slave 14	- (Read only)	U16		X	
0x5865:015	EtherCAT slaves device status: Device status slave 15	- (Read only)	U16		X	
0x5865:016	EtherCAT slaves device status: Device status slave 16	- (Read only)	U16		X	
0x603F	Error code	- (Read only)	U16		HX	●
0x6040	CiA control word	**0x0000**	U16		HX	●
0x6041	CiA status word	- (Read only)	U16		HX	●
0x6042	Set speed	**0 rpm**	I16	1	X	●
0x6043	Internal set speed	x rpm (Read only)	I16	1	X	●
0x6044	Actual speed	x rpm (Read only)	I16	1	X	●
0x6046:001	Speed limits: Min. speed	**0 rpm**	U32	1	X	●
0x6046:002	Speed limits: Max. speed	**2147483647 rpm**	U32	1	X	●
0x6048:001	Acceleration ramp: CiA acceleration: Delta speed	**0 rpm**	U32	1	-	●
0x6048:002	Acceleration ramp: CiA acceleration: Delta time	**10 s**	U16	1	-	●
0x6049:001	Deceleration ramp: CiA deceleration: Delta speed	**0 rpm**	U32	1	-	●
0x6049:002	Deceleration ramp: CiA deceleration: Delta time	**10 s**	U16	1	-	●
0x604B:001	vl set-point factor: vl set-point factor numerator	**1**	I16	1	-	●
0x604B:002	vl set-point factor: vl set-point factor denominator	**1**	I16	1	-	●
0x604C:001	vl dimension factor: vl dimension factor numerator	**1**	I32	1	-	●
0x604C:002	vl dimension factor: vl dimension factor denominator	**1**	I32	1	-	●
0x605A	CiA: Quick stop mode	**Ramp > quick stop active [6]**	I16		-	
0x605B	Shutdown option code	**Disable drive function [0]**	I16		-	
0x605E	CiA: Response to minor faults	**Advanced quick stop [-2]**	I16		-	
0x6060	CiA: Operation mode	**No selection [0]**	I8		-	●
0x6061	CiA: Active operation mode	- (Read only)	I8		X	●
0x6062	Internal set position	x inc (Read only)	I32	1	X	
0x6063	Internal actual position	x incr. (Read only)	I32	1	X	●
0x6064	Actual position	x inc (Read only)	I32	1	X	●
0x6065	Following error window	**1000 inc**	U32	1	-	●
0x6066	Following error delay	**0 ms**	U16	1	-	●
0x6067	Position reached window	**1000 inc**	U32	1	-	
0x6068	Position reached delay	**0 ms**	U16	1	-	
0x606C	Actual speed	rpm (Read only)	I32	480000 / 2147483647	X	●
0x6071	Set torque	**0.0 %**	I16	10	X	●
0x6072	Max. torque	**250.0 %**	U16	10	-	●
0x6073	Max. current	**150.0 %**	U16	10	-	
0x6074	Internal set torque	x.x % (Read only)	I16	10	X	
0x6075	Rated motor current	**1.300 A**	U32	1000	C	
0x6076	Rated motor torque	**0.600 Nm**	U32	1000	C	

Address	Name	Default setting	Data type	Factor	A	M
0x6077	Actual torque	x.x % (Read only)	I16	10	X	●
0x6078	Actual current	x.x % (Read only)	I16	10	X	●
0x6079	DC-bus voltage	x.xxx V (Read only)	U32	1000	X	●
0x607A	Set position	**0 inc**	I32	1	X	●
0x607E	Polarity	**0**	U8	1	C	
0x6080	Max. motor speed	**6075 rpm**	U32	1	-	●
0x6085	Quick stop deceleration	**2147483647**	U32	1	-	
0x608F:001	Position encoder resolution: Encoder increments	**16 bit [65536]**	U32		C	
0x608F:002	Position encoder resolution: Motor revolutions	**1**	U32	1	C	
0x6090:001	Velocity encoder resolution: Encoder increments/s	**33554432**	U32	1	C	
0x6090:002	Velocity encoder resolution: Motor revolutions/s	**125**	U32	1	C	
0x60B1	Offset speed	**0.00 rpm**	I32	480000 / 2147483647	-	●
0x60B2	Offset torque	**0.0 %**	I16	10	-	●
0x60B8	Touch probe settings	**0x0000**	U16		H	●
0x60B9	Touch probe status	- (Read only)	U16		HX	●
0x60BA	Touch probe 1: Position at pos. edge	x inc (Read only)	I32	1	X	●
0x60BB	Touch probe 1: Position at neg. edge	x inc (Read only)	I32	1	X	●
0x60BC	Touch probe 2: Position at pos. edge	x inc (Read only)	I32	1	X	●
0x60BD	Touch probe 2: Position at neg. edge	x inc (Read only)	I32	1	X	●
0x60C0	Interpolation mode	**Quadratic [-1]**	I16		-	●
0x60C2:001	Interpolation time: Interpolation time mantissa	**1**	U8	1	-	
0x60C2:002	Interpolation time: Interpolation time exponent	**-3**	I8	1	-	
0x60E0	Positive torque limit	**100.0 %**	U16	10	-	●
0x60E1	Negative torque limit	**100.0 %**	U16	10	-	●
0x60E4:001	Additional position actual value: Load encoder/ master encoder - actual position	x inc (Read only)	I32	1	X	●
0x60E5:001	Additional velocity actual value: Load encoder/ master encoder - actual speed	rpm (Read only)	I32	480000 / 2147483647	X	●
0x60E6:001	Additional position encoder resolution - encoder increments: Load encoder/master encoder - number of increments	**16 Bit [65536]**	U32		C	
0x60EB:001	Additional position encoder resolution - motor revolutions: Load encoder/master encoder - resolution of motor revolutions	**1**	U32	1	C	
0x60F4	Following error actual value	x inc (Read only)	I32	1	X	●
0x60FA	Control effort	rpm (Read only)	I32	480000 / 2147483647	X	●
0x60FC	Position demand internal value	x incr. (Read only)	I32	1	X	
0x60FD	Digital input status	- (Read only)	U32		HX	●
0x60FE:001	Digital outputs: Digtal output status	**0x00000000**	U32		HX	●
0x60FF	Set speed	**0.00 rpm**	I32	480000 / 2147483647	X	●
0x6404	Motor manufacturer	"**Lenze**"	STRING[50]		-	
0x6502	Supported drive modes	- (Read only)	U32		HX	
0x67FF	Device profile number	- (Read only)	U32	1	X	
0xA200:001	Systembus output data: Systembus data output 1	- (Read only)	U32	1	X	●
0xA200:002	Systembus output data: Systembus data output 2	- (Read only)	U32	1	X	●
0xA200:003	Systembus output data: Systembus data output 3	- (Read only)	U32	1	X	●
0xA200:004	Systembus output data: Systembus data output 4	- (Read only)	U32	1	X	●

Address	Name	Default setting	Data type	Factor	A	M
0xA200:005	Systembus output data: Systembus data output 5	- (Read only)	U32	1	X	●
0xA200:006	Systembus output data: Systembus data output 6	- (Read only)	U32	1	X	●
0xA200:007	Systembus output data: Systembus data output 7	- (Read only)	U32	1	X	●
0xA200:008	Systembus output data: Systembus data output 8	- (Read only)	U32	1	X	●
0xA200:009	Systembus output data: Systembus data output 9	- (Read only)	U32	1	X	●
0xA200:010	Systembus output data: Systembus data output 10	- (Read only)	U32	1	X	●
0xA200:011	Systembus output data: Systembus data output 11	- (Read only)	U32	1	X	●
0xA200:012	Systembus output data: Systembus data output 12	- (Read only)	U32	1	X	●
0xA200:013	Systembus output data: Systembus data output 13	- (Read only)	U32	1	X	●
0xA200:014	Systembus output data: Systembus data output 14	- (Read only)	U32	1	X	●
0xA200:015	Systembus output data: Systembus data output 15	- (Read only)	U32	1	X	●
0xA200:016	Systembus output data: Systembus data output 16	- (Read only)	U32	1	X	●
0xA680:001	Systembus input data: Systembus data input 1	**0**	U32	1	X	●
0xA680:002	Systembus input data: Systembus data input 2	**0**	U32	1	X	●
0xA680:003	Systembus input data: Systembus data input 3	**0**	U32	1	X	●
0xA680:004	Systembus input data: Systembus data input 4	**0**	U32	1	X	●
0xA680:005	Systembus input data: Systembus data input 5	**0**	U32	1	X	●
0xA680:006	Systembus input data: Systembus data input 6	**0**	U32	1	X	●
0xA680:007	Systembus input data: Systembus data input 7	**0**	U32	1	X	●
0xA680:008	Systembus input data: Systembus data input 8	**0**	U32	1	X	●
0xA680:009	Systembus input data: Systembus data input 9	**0**	U32	1	X	●
0xA680:010	Systembus input data: Systembus data input 10	**0**	U32	1	X	●
0xA680:011	Systembus input data: Systembus data input 11	**0**	U32	1	X	●
0xA680:012	Systembus input data: Systembus data input 12	**0**	U32	1	X	●
0xA680:013	Systembus input data: Systembus data input 13	**0**	U32	1	X	●
0xA680:014	Systembus input data: Systembus data input 14	**0**	U32	1	X	●
0xA680:015	Systembus input data: Systembus data input 15	**0**	U32	1	X	●
0xA680:016	Systembus input data: Systembus data input 16	**0**	U32	1	X	●
0xE600:001	FSoE Slave Frame Elements: Command	- (Read only)	U8	1	X	●
0xE600:002	FSoE Slave Frame Elements: Connection ID	- (Read only)	U16	1	X	●
0xE600:003	FSoE Slave Frame Elements: CRC_0	- (Read only)	U16	1	X	●
0xE600:004	FSoE Slave Frame Elements: CRC_1	- (Read only)	U16	1	X	●
0xE600:005	FSoE Slave Frame Elements: CRC_2	- (Read only)	U16	1	X	●
0xE600:006	FSoE Slave Frame Elements: CRC_3	- (Read only)	U16	1	X	●
0xE600:007	FSoE Slave Frame Elements: CRC_4	- (Read only)	U16	1	X	●
0xE600:008	FSoE Slave Frame Elements: CRC_5	- (Read only)	U16	1	X	●
0xE600:009	FSoE Slave Frame Elements: CRC_6	- (Read only)	U16	1	X	●
0xE700:001	FSoE Master Frame Elements: Command	- (Read only)	U8	1	X	●
0xE700:002	FSoE Master Frame Elements: Connection ID	- (Read only)	U16	1	X	●
0xE700:003	FSoE Master Frame Elements: CRC_0	- (Read only)	U16	1	X	●
0xE700:004	FSoE Master Frame Elements: CRC_1	- (Read only)	U16	1	X	●
0xE901:001	FSoE Connection Communication Parameter: Version	- (Read only)	STRING[2]		X	
0xE901:002	FSoE Connection Communication Parameter: Safety address	- (Read only)	U16	1	X	
0xE901:003	FSoE Connection Communication Parameter: Connection ID	- (Read only)	U16	1	X	
0xE901:004	FSoE Connection Communication Parameter: Watchdog Time	- (Read only)	U16	1	X	
0xE901:006	FSoE Connection Communication Parameter: Connection Type	- (Read only)	U16		X	
0xE901:007	FSoE Connection Communication Parameter: Communication Parameter Length	- (Read only)	U16	1	X	
0xE901:008	FSoE Connection Communication Parameter: Application Parameter Length	- (Read only)	U16	1	X	
0xEA00:001	FSoE Connection Diagnosis: Connection State	- (Read only)	U16		X	

Address	Name	Default setting	Data type	Factor	A	M
0xF980:001	Safety addresses: FSoE address	- (Read only)	U16	1	X	
0xF980:002	Safety addresses: Safety address	- (Read only)	U16	1	-	

22.2 Glossary

Definitions in functional safety

Abbreviation	Meaning
AIE	Acknowledge In Error, error acknowledgement
AIS	Acknowledge In Stop, restart acknowledgement
OFF state	Triggered signal status of the safety sensors
CCF	Common Cause Error (also β-value)
EC_FS	Error Class Fail Safe
EC_SS1	Error Class Safe Stop 1
EC_SS2	Error Class Safe Stop 2
EC_STO	Error Class Safe Torque Off Stop 0
ON state	Signal status of the safety sensors in normal operation
FIT	Failure In Time, 1 FIT = 10-9 Error/h
FMEA	Failure Mode and Effect Analysis
FSoE	FailSafe over EtherCAT
GSDML	Device description file with PROFINET-specific data to integrate the configuring software of a PROFINET controller.
HFT	Hardware Failure Tolerance
Cat.	Category according to EN ISO 13849-1
nBD	Speed value Base-Drive, internally determined actual speed from standard application
nSD	Safe-Drive speed value, internally determined actual speed from the safety application
n_safe	Actual speed determined from validation of nBD and nSD. Enters the further processing of the speed-dependent safety functions.
OSSD	Output Signal Switching Device, tested signal output
pBD	Base-Drive position value, internally determined actual position from standard application
pSD	Safe-Drive position value, internally determined actual position from the safety application
p_safe	Actual position determined from validation of pBD and pSD. Enters the further processing of the position-dependent safety functions.
PELV	Protective Extra Low Voltage
PL	Performance Level according to EN ISO 13849-1
PM	Plus−Minus − switched signal paths
PP	Plus−Plus − switched signal paths
PS	PROFIsafe
PWM	Pulse Width Modulation
SCS	Safe Creeping Speed
SD−In	Safe Digital Input
SD−Out	Safe Digital Output
SELV	Safety Extra Low Voltage
SFF	Safe Failure Fraction
SIL	Safety Integrity Level according to EN IEC 61508

© 10/2023 · 7.0 · www.Lenze.com